EXHIBIT 42

PEST MANAGEMENT GUIDE

Field Crops

2016

Published by: Virginia Cooperative Extension

Content Coordinators: D. Ames Herbert, Jr., Department of Entomology

Michael Flessner, Department of Plant Pathology, Physiology and Weed Science

Produced by: Communications and Marketing, College of Agriculture and Life Sciences,
Virginia Polytechnic Institute and State University, 2016

Virginia Cooperative Extension
Virginia Tech • Virginia State University

www.ext.vt.edu

Virginia Cooperative Extension programs and employment are open to all, regardless of age, color, disability, gender, gender identity, gender expression, national origin, political affiliation, race, religion, sexual orientation, genetic information, veteran status, or any other basis protected by law. An equal opportunity/affirmative action employer. Issued in furtherance of Cooperative Extension work, Virginia Polytechnic Institute and State University, Virginia State University, and the U.S. Department of Agriculture cooperating. Edwin J. Jones, Director, Virginia Cooperative Extension, Virginia Tech, Blacksburg; M. Ray McKinnie, Interim Administrator, 1890 Extension Program, Virginia State University, Petersburg.

VT/0116/ENTO-167P

PUBLICATION 456-016

Keys to the Proper Use of Pesticides

1. Read the label on each pesticide container before each use. Follow the printed instructions to the letter; heed all cautions and warnings; note precautions about residues.

2. Store pesticides in the containers in which you bought them. Put them where children and animals cannot get to them - preferably locked-up and away from food, feed, seed, and other materials that may become harmful if contaminated.

3. Dispose of empty pesticide containers properly.

See your physician if symptoms of illness occur during or after the use of pesticides.

Disclaimer

Commercial products are named in this publication for informational purposes only. Virginia Cooperative Extension does not endorse these products and does not intend discrimination against other products which also may be suitable.

NOTICE:

Because pesticide labels can change rapidly, you should read the label directions carefully before buying and using any pesticides.

Regardless of the information provided here, you should always follow the latest product label when using any pesticide. If you have any doubt, please contact your local Extension agent, VDACS pesticide investigator, or pesticide dealer for the latest information on pesticide label changes.

See Chapter 1 - Regulations and Basic Information **for pesticide handling information.**

Field Crops - 2016 - Chapter Section Table of Contents

1 Regulations and Basic Information
Safe and Effective Use 1-1
Protecting Honey Bees 1-45

2 Livestock
Livestock Area Fly Control 2-1
Poultry Area Fly Control 2-5
Beef External Parasites 2-9
Dairy External Parasites 2-19
Swine External Parasites 2-27
Sheep External Parasites 2-31
Horse External Parasites 2-33
Poultry External Parasites 2-35

3 Disease and Nematode Management in Field Crops
Disease and Nematode Management 3-1
Corn and Sorghum Diseases 3-2
Soybeans 3-9
Small Grains 3-19
Forage Crop Diseases 3-31
Tobacco 3-33
Peanuts 3-45
Cotton 3-55

4 Insect Control in Field Crops
Grain Crops, Soybeans, Forages 4-1
Forages: Alfalfa and Other Legumes 4-5
Orchardgrass, Timothy, and Bermudagrass 4-13
Corn 4-17
Small Grains 4-49
Sorghum 4-55
Soybeans 4-59
Peanuts 4-75
Cotton 4-85

5 Weeds Control in Field Crops
Introduction 5-1
Corn 5-53
Sorghum 5-125
Soybeans 5-151
Small Grains 5-203
Forages: Alfalfa and Other Legumes 5-225
Problem Weeds 5-283
Tobacco 5-293
Peanuts 5-301
Cotton 5-319

6 Plant Regulators
Cotton Growth Regulators 6-1
Cotton Harvest Aids 6-3

7 Author Contact List 7-1

Safe and Effective Use

Patricia A. Hipkins, Assistant Coordinator, Virginia Tech Pesticide Programs
Michael J. Weaver, Extension Coordinator, Virginia Tech Pesticide Programs

Introduction

The Pest Management Guide Series

The Virginia Pest Management Guide (PMG) series lists options for management of major pests: diseases, insects, nematodes, and weeds. These guides are produced by Virginia Cooperative Extension and each guide is revised annually. PMG recommendations are based on research conducted by the Research and Extension Division of Virginia Tech, in cooperation with other land-grant universities, the USDA, and the pest management industry.

These guides are not a comprehensive control plan for all pests in Virginia. However, they do provide management tactics for major pest problems. For specific recommendations beyond the scope of these guides, please contact the Extension specialist(s) associated with the particular commodity or specialty area.

Chemicals listed in the PMG's are registered by the U.S. Environmental Protection Agency (EPA) and the Virginia Department of Agriculture and Consumer Services (VDACS). When used in accordance with label directions, residues should be within tolerance limits set by the EPA. Pesticide users must follow label directions with regard to application site(s), rates of application, number of applications, and minimum time interval between application and harvest. Violation of label directions may result in unsafe residues, fines to the applicator and grower, crop seizure, and loss of public confidence and product marketability.

Use pesticides only on labeled sites, and follow all label directions to the letter!

How To Get Help with a Pest or Pesticide Management Problem

The first rule in solving any problem is to identify the cause before you seek a solution. This is especially true for pest management. You MUST identify the pest before you make any attempt to control it. If you need assistance with pest identification, contact your local Extension office. Extension offices are located in local county or city governmental units throughout Virginia. The agents and staff members of these units are dedicated professionals. They are part of a unique alliance between the United States Department of Agriculture, Virginia's land-grant universities, and local government. Local Extension offices are listed in the telephone directory. There is also a complete list of all Virginia Cooperative Extension offices at www.ext.vt.edu/offices/ on the Internet.

If a pest is especially difficult to identify or if you need more information, your agent will send a specimen and/or samples to Virginia Tech. Services available include: the Plant Disease Diagnostic Clinic, the Insect Identification Laboratory, the Weed Identification Laboratory, the Soil Testing Laboratory, and the Forage Testing Laboratory. One or more of these services may help to solve pest—or pesticide—management problems.

Alternative Pest Controls

Pest management includes more than the use of pesticides. Virginia agriculture employs a number of non-chemical methods. Alternative controls are an integral part of any production system. However, where chemical controls are necessary, they must be used in such a way as to provide for a safe food supply, a clean and healthy environment for humans and wildlife, and a productive and profitable agricultural industry.

Integrated Pest Management (IPM)

Integrated Pest Management (IPM) is an ecological approach to pest control, based on the life cycle and habitat of the pest. It combines all appropriate pest management techniques into a single, unified program or plan. The goal of any IPM program is to reduce pest populations to an acceptable level in a way that is practical, cost-effective, and safe for people and the environment.

Virginia Tech has developed a number of specific IPM programs with precise monitoring (scouting) tactics and thresholds. Each is based on scientific studies of local pest populations and the crops/sites these pests damage. Specific IPM protocols take time and resources to generate; as a result, there is not a prescribed program for each and every pest + site combination in the commonwealth. However, an experienced pest manager can apply IPM principles to any situation by: identifying the

pest; learning about its life cycle, basic needs, and the environmental conditions that influence its population size and activity; assessing pest population size and distribution by monitoring (scouting); deducing what attracted or brought the pest to the site; acquiring accurate information about management tactics, both chemical and non-chemical; and making long-term plans to prevent or suppress this pest in years to come. For more information about IPM, contact your local Extension agent.

Pesticide Management in Virginia

Virginia Cooperative Extension offers educational programs for the public in pest management and pesticide safety. Examples are commodity production meetings and pesticide safety workshops, including pesticide applicator training and recertification.

Issues and programs such as farmworker protection, recordkeeping, endangered species protection, food and water quality, and re-registration of pesticides often result in additional state and federal regulations impacting pesticide users. In Virginia, the Virginia Pesticide Control Act and regulations promulgated under the act affect growers and commercial pesticide applicators. State and federal pesticide laws and regulations are enforced by the Virginia Department of Agriculture and Consumer Services, Office of Pesticide Services.

Growers and applicators are responsible for meeting all requirements imposed by state and federal agencies. For more information about programs, laws, and regulations, contact your local Extension office and/or VDACS/OPS.

Pesticide Applicator Certification

In Virginia, most commercial pesticide users, all aerial applicators, and growers who use restricted-use pesticides must be certified. The Virginia Pesticide Control Act and regulations drafted under the act define "pesticide use" as actual application, supervision of an application, or commercial recommendation of a pesticide. This includes the routine activities that are part of a pesticide application, such as mixing, loading, clean-up, and disposal. Handling, transfer, or transport after the manufacturer's original seal is broken is considered "use." (Pesticide handling typically managed by persons other than the mixer/loader/applicator, such as long-distance transport, long-term storage, or ultimate disposal, is not considered part of routine use.)

Before preparing for certification, you must first decide if you plan to become a Private Applicator, Commercial Applicator, or Registered Technician. Private and Commercial Applicators must be certified in one or more categories, based on the type(s) of pesticide use planned.

Types of Pesticide Applicators

Two general types of certified pesticide applicator are recognized by the Commonwealth of Virginia. Each is described below. Persons engaged in several sorts of pesticide-related activities may need to be certified as both a private and a commercial applicator.

Private Applicator

A certified applicator who uses or supervises the use of any restricted-use pesticide (RUP) to produce an agricultural commodity. Applications must be made on property owned or rented by the user or his/her employer; or, if applied without compensation other than trading of personal services between producers of agricultural commodities, on the property of another person. Noncertified applicators employed by agricultural producers may use RUPs only when under the direct supervision of a certified Private Applicator. Direct supervision, in this case, means the RUP is used by a competent person who is acting under the instructions and control of a certified Private Applicator. The certified Private Applicator is responsible for the actions of the uncertified farmhand. The certified Private Applicator who is in charge of the pesticide use must either be in close proximity to the pesticide user or within telephone or radio contact.

Commercial Applicator

A person using any pesticide for any purpose on the job other than as described for a Private Applicator (production of an agricultural commodity on property the grower owns or leases). Most commercial applicators must be certified. There are two certification options: Commercial Applicator or Registered Technician.

Certified Commercial Applicator

A person who has fulfilled the competency requirements set for Commercial Applicators in Virginia to use or supervise the use of any pesticide for any purpose or on any property on the job other than as described for a Private Applicator.

Certified Registered Technician

An individual who performs services similar to those of a certified Commercial Applicator. Such a person has completed training and demonstration of those competency standards required for Registered Technicians but not the requirements for Commercial Applicator certification. (Registered Technician trainees receive general pesticide safety training and job-specific instruction in pesticide use.) Registered Technicians may use general-use pesticides without supervision. They may use restricted-use pesticides under the direct supervision of a certified Commercial Applicator. Registered Technicians who work for hire must work for a licensed Pesticide Business.

Pesticide Applicator Training Manuals

Pesticide applicator training manuals are sold by Virginia Tech. Orders can be placed online: *www.vtpp.ext.vt.edu* or *vtpp.org*. Alternatively, a government purchase orders can be arranged by email: vcedistributioncenter@vt.edu

Certification procedures differ for Private Applicators, Commercial Applicators, and Registered Technicians. For the most up-to-date information about certification requirements, categories, initial certification procedures, and how to keep a certificate in force, contact your local Extension office, Virginia Tech Pesticide Programs, or VDACS Office of Pesticide Services.

Pesticide Laws, Regulations, and Restrictions

The Federal Insecticide, Fungicide, and Rodenticide Act (FIFRA) has been amended several times since it was passed in 1947. The amendments to this act are some of the most significant laws impacting American agriculture.

The 1972 amendment is known as the Federal Environmental Pesticide Control Act (FEPCA). FEPCA stipulates that the use of any pesticide inconsistent with its labeling is prohibited; that violations of FEPCA by growers, applicators, and dealers can result in heavy fines and imprisonment; that pesticides must be classified for either general use or for restricted use; that anyone using or purchasing restricted-use pesticides must be certified by their state of residency; that pesticide manufacturing plants must be inspected by the EPA; that states may register pesticides on a limited basis for special local needs; that all pesticides must be registered by the EPA; that all product registrations must be backed by scientific evidence to control the pests on the label; not injure people, crops, animals, or the environment; and not result in illegal residues in food and feed when used according to label directions.

A 1978 amendment was designed to improve the registration processes. It stipulates that efficacy data can be waived and that generic standards can be set for active ingredients rather than for each product. Re-registration of older products is required to make certain that scientific data exists to back them. Pesticides can be given a conditional registration prior to full registration. Registrants can use supporting data supplied from other companies if paid for. Trade secrets are to be protected. States have primary enforcement responsibility for both federal and their own state pesticide laws and regulations. States can register pesticides under a Special Local Needs (SLN or 24C) label. Finally, the phrase “to use any registered pesticide in a manner inconsistent with its labeling” was defined in detail.

It is illegal to use a pesticide in any way not permitted by the labeling. A pesticide may be used only on the plants, animals, or sites named in the directions for use. You may not use higher rates or more frequent applications. You must follow all directions for use, including directions concerning safety, mixing and loading, application, storage, and disposal. You must wear the specified personal protective equipment. Pesticide use directions and label instructions are not advice, they are legal requirements. Persons who derive income from the application, recommendation, sale, or distribution of pesticides CANNOT make recommendations which call for uses inconsistent with labeling.

However, federal law does allow you to use some pesticides in ways not specifically mentioned in the labeling. You may: apply a pesticide to control a pest not listed on the label (as long as the application is made in accordance with label directions); use any appropriate equipment or method of application not specifically prohibited by the label; mix two or more pesticides if not prohibited by one or more labels and all the dosages are at or below the label rate; and mix a pesticide or pesticides with fertilizer if the mixture is not prohibited by the labeling.

A major change to FIFRA, provided by a 1988 amendment, requires EPA to accelerate the re-registration of all pesticide products registered prior to 1978. As a result, some older pesticide registrations and/or product uses are being dropped.

The Food Quality Protection Act (FQPA) of 1996 amends both the Federal Food, Drug, and Cosmetic Act (FFDCA) and FIFRA. FQPA provides a unified, comprehensive health-based plan for pesticide residues. Because it requires the EPA to consider pesticide use and safety data in new ways, it will result in significant changes in U.S. pesticide use patterns.

In 2006, EPA initiated a program to re-evaluate all pesticide registrations on a regular cycle. Re-registration and FQPA will impact pesticide availability and labels.

The Virginia Pesticide Control Act

The Virginia Pesticide Control Act is enforced by the Virginia Department of Agriculture and Consumer Services (VDACS). The act and regulations which support it affect pesticide use in Virginia. Information concerning regulatory changes impacting pesticide use is available from Virginia Tech, VDACS Office of Pesticide Services, and your local Extension office.

Responsibilities of Pesticide Applicators in Virginia

I. Follow the Pesticide Label

The pesticide label is a legal agreement between the Environmental Protection Agency (EPA), the product manufacturer, and the user. Pesticide product labels provide instructions for all stages/phases of use. Applicators must read, understand, and follow label directions carefully. Pesticides may not be applied to any site not listed on the product label. Materials may not be applied more often, or at rates higher, than the label directs. Pesticide applicators must follow all label directions for transport, mixing, loading, application, storage, and disposal of pesticide products and containers. State and federal laws prohibit the use of any pesticide in a way that is not consistent with its label. There are state and federal penalties for violations.

II. Adhere to Certification Requirements

Pesticide use means actual application and/or supervision of an application. "Use" includes the routine activities that are part of a pesticide application, such as mixing, loading, cleanup, and disposal. Handling, transfer, or transport after the manufacturer's original seal is broken is considered "use." (Pesticide handling typically managed by persons other than the mixer/loader/applicator—such as long-distance transport, long-term storage, or ultimate disposal—is not considered part of routine use.)

Private Applicators:

- In Virginia, a private applicator is a person engaged in producing an agricultural commodity on private property (owned, rented, or leased by the producer).
- Growers using restricted-use pesticides (RUP) must be certified or work under the direct supervision of a certified private applicator.

Commercial Applicators:

- The Virginia Pesticide Control Act defines a person who, as part of his or her job duties, uses or supervises the use of any pesticide for any purpose (other than production of agricultural commodities on private land) as a commercial pesticide applicator.
- Certification options for commercial applicators:
  - registered technician
  - commercial applicator
- Certification requirements depend on the commercial applicator class and scope of pesticide use. In addition, The Virginia Business License Regulation requires that people who make recommendations for-hire be certified. There are four classes of commercial applicator:
  - *Government employees* must be certified to use any pesticide for any purpose.
  - *For-hire* commercial applicators must be certified to use any pesticide for any purpose, and to make recommendations for hire (ex. as a crop consultant).
  - *Not-for-hire* commercial applicator certification requirements vary. People who do not work for hire but do use pesticides on the job must be certified if:
    - Using restricted-use pesticides, or
    - Using pesticides on the sites in the following list:

- on any area open to the public at the following establishments:
  - * Educational institutions,
  - * Health-care facilities,
  - * Day-care centers, or
  - * Convalescent facilities;
- where open food is stored, processed or sold; or
- on any recreational land over five acres.

- *Inactive* status is a way to maintain certified applicator status while not employed as a pesticide user.

The Virginia Department of Agriculture and Consumer Services (VDACS) is responsible for the certification of applicators and for all enforcement aspects of the Virginia Pesticide Control Act and its regulations.

Certificates may be suspended or revoked if the holder, in the eyes of VDACS, presents a substantial danger or threat of danger to public health and safety or to the environment. A suspension may be issued on an emergency basis, and a certificate may be revoked after a hearing has taken place. If a person's certificate is revoked, he or she may not reapply for Virginia certification for two years.

Persons who have a history of repeat violations of any federal, state, or local pesticide law may not apply for certification. In addition, persons who have had a Virginia applicator certificate revoked may not be granted certification within a two-year period following that action. However, persons in either of these circumstances may petition for certification.

III. Keep Your Certificate in Force

A. Renewal of Certificates

Commercial: Commercial applicator certificates must be renewed every two years. They expire June 30 of the second year after issue. VDACS Office of Pesticide Services will send each commercial applicator a renewal notice when it is time to renew. Return the notice with the $70 renewal fee on or before June 30 to avoid a $14 penalty. No late renewals will be accepted after August 29. (See the last paragraph in this section for special conditions for certified applicators who work for federal, state, or local government.)

Applications for renewal will not be processed unless the applicator has met the requirements for recertification credit in the proper category or categories (see section B, which follows). If you allow your certificate(s) to lapse by more than 60 days, you must retest in both the core material and the specific category or categories to reinstate your certificate(s).

All applicators must inform the VDACS-OPS/Certification, Licensing, Registration, and Training Section if their mailing address or employment status changes.

Commercial applicators who work for hire will not be issued renewed certificates unless they have, or work for someone who has, a valid Virginia pesticide business license.

Government applicators do not have to pay application and renewal fees. For this reason, VDACS Office of Pesticide Services does not send renewal notices to government employees who are certified Commercial Applicators and Registered Technicians. Government employee applicators who have met their recertification requirements will receive their renewed certificates automatically.

Private: Private applicator certificates are automatically renewed biennially at recertification. There is no fee. Private applicator certificates expire on December 31, two years following issue. Late renewals will not be accepted after March 1.

B. Recertification

Private and commercial applicators and registered technicians must participate in an ongoing pesticide education program. At a minimum, commercial applicators and registered technicians must attend at least one fully approved recer-

tification session, per category, every two years. Private applicators must accumulate three credits per category every two years before their certificate expires. Applicators may accumulate up to four years of recertification credit. Persons who fail to recertify will not be able to renew their certificates.

Virginia Cooperative Extension (VCE), pesticide-related trade and professional organizations, and others offer recertification courses. A listing of all Virginia-approved courses may be obtained from:

Virginia Cooperative Extension offices or
Virginia Tech Pesticide Programs (VTPP) Unit:
www.vtpp.ext.vt.edu/ (private applicator courses; searchable database)

VDACS/OPS/Certification, Licensing, Registration, and Training Unit:
www.vdacs.virginia.gov/pesticides/categories.shtml (commercial applicator courses)

Program availability varies by time of year and by category. Most courses are offered between September and March. Applicators are advised to keep in touch with Virginia Cooperative Extension and/or professional organizations to avoid missing recertification opportunities.

Certified applicators based out of state may be able to become certified and recertify in Virginia by reciprocity. Contact the Virginia Department of Agriculture and Consumer Service Office of Pesticide Services for more information.

Failure to maintain a certificate, either due to failure to respond to the renewal notice or failure to recertify, will result in expiration. Persons who allow their certificate(s) to lapse (for more than 60 days) must retest.

Applicators must inform VDACS/OPS if their address changes.

IV. Supervise Employees

A. Registered Technicians by Commercial Applicators

Certified commercial applicators must provide on-the-job training, instruction, and supervision of registered technicians employed by them or assigned to them by their employer. Registered technicians may use restricted-use pesticides only under the direct supervision of a commercial applicator. The supervising commercial applicator must either be physically present or be where the registered technician may contact the applicator by telephone or radio. Certified applicators are responsible for the work of registered technicians under their supervision and must provide the registered technicians with clear, specific instructions on all aspects of pesticide use. A registered technician may apply general-use pesticides unsupervised.

Uncertified persons may apply pesticides commercially while in training to become registered technicians *only* when under the direct, *on-site* supervision of a properly certified commercial applicator.

B. Uncertified Handlers by Private Applicators

Uncertified but competent persons may apply restricted-use pesticides in the production of agricultural commodities on private property when under the direct supervision of a certified private applicator. The certified private applicator is responsible for the actions of the uncertified person.

Direct supervision means the act or process by which the application of a pesticide is made by a competent person acting under the instructions and control of a certified applicator who is responsible for the actions of that person. The certified applicator must be accessible to the applicator by being nearby or within reach by telephone or radio.

V. Handle Pesticides Safely

Although there are no specific storage and disposal regulations in Virginia, unsafe use/handling/storage/disposal practices can be cited under the enforcement regulation: 2 VAC 20-20-10 through 20-220 (VAC is the Virginia Administrative Code).

Provisions to Note:

Handling and Storage:

"No person shall handle, transport, store, display, or distribute pesticides in a manner which may endanger humans or the environment, or food or feed or other products…"

Disposal:

"No person shall dispose of, discard, or store any pesticide or pesticide containers in a manner that may cause injury…or pollute…"

Application Equipment:

"…must…be in good working order…dispense the proper amount of material…be leakproof…have cutoff valves and backflow prevention…"

Service Container Labeling:

Containers other than the original registrant's or manufacturer's containers used for the temporary storage or transportation of pesticide concentrates or end-use dilutions must have abbreviated labeling for identification.

A. Pesticide Concentrate:

1. If the pesticide to be temporarily stored or transported is a concentrate to be further diluted, the container shall bear a securely attached label with the following information:

   a. Product name or brand name from product label;

   b. EPA registration number from the product label;

   c. Name and percentage of active ingredient(s) from the product label; and

   d. Appropriate signal word; i.e., Poison, Danger, Warning, Caution (from the product label).

2. The above labeling is required for concentrate service containers, regardless of container type, size, or capacity. (Note: If possible, keep pesticides in their original container.)

B. Pesticide End-Use Dilutions or End-Use Concentrates:

1. If the pesticide to be temporarily stored or transported will be applied without further dilution, its container must bear a securely attached label with the following information:

   a. Product name (brand name from product label) preceded by the word "Diluted" or "End-Use Concentrate";

   b. EPA registration number from the concentrate product label;

   c. Name of active ingredient(s) and percentage(s) of end-use dilution; and

   d. Appropriate signal word; i.e., Poison, Danger, Warning, Caution (from the product label).

2. Exemptions: abbreviated service container labeling is not required for:

   a. End-use dilution containers not exceeding 3 gallons liquid or 3 pounds dry capacity, when such containers are used as application devices; i.e., hand-held sprayers, dusters, puffers, etc.

   b. Containers used by farm-supply dealers for the temporary storage or transportation of pesticide concentrate or end-use dilution, provided that sales invoices or delivery tickets adequately identifying the pesticide(s) accompany each shipment or delivery.

   c. Farm concentrate or end-use dilution containers or application equipment used for the temporary storage or transportation of such pesticides for agricultural use.

   d. Aircraft-mounted containers used for temporary storage or transportation of concentrate or end-use dilution pesticides, provided that aircraft logs or other documents on board adequately identify the pesticide(s).

VI. Keep Accurate Records

A. Commercial Applicators

Virginia regulations require all commercial applicators to keep records of all pesticide applications. These records must be maintained for two years following the pesticide use. Commercial applicator records must contain the following information:

1. Name, address, and telephone number (if applicable) of the treatment site property owner, and address/location of the application site, if different;
2. Name and certification number of the person making or supervising the application;
3. Date of application (day, month, year);
4. Type of plants, crops, animals, or sites treated;
5. Principal pest(s) to be controlled;
6. Acreage, area, or number of plants or animals treated;
7. Identification of pesticide used:

   -Brand name or common name of pesticide used, and

   -EPA product registration number;
8. Amount of pesticide concentrate and amount of diluent (water, etc.) used, by weight or volume, or the volume and concentration applied to a structure as defined in #6; and
9. Type of application equipment used.

Commercial applicators and WPS compliance:

Commercial applicators who apply pesticides to agricultural commodities on farms, forests, nurseries, and greenhouses should be sure their record data elements conform to those required by both the **Worker Protection Standard (WPS)** and the **Food, Agriculture, Conservation, and Trade (FACT) Act**, also known as the 1990 Farm Bill.

- If a grower hires a commercial applicator to apply an RUP, the commercial applicator is responsible for making and maintaining the application records required by the FACT Act.
- If a grower with farm-worker or pesticide-handler employees hires a commercial applicator to apply any pesticide, the commercial applicator must provide the grower with information about the application in advance. This is necessary so that the grower can comply with WPS notification, restricted-entry, and record-keeping requirements.

A sample commercial applicator record-keeping form follows at the end of this section.

B. Private Applicators

The Food, Agriculture, Conservation and Trade (FACT) Act of 1991, also known as the 1990 Farm Bill, requires certified private pesticide applicators to record applications of restricted-use pesticides (RUPs). RUP applications made by a private applicator must be recorded within 14 days and maintained for a period of two years. Private Applicator records must contain the following nine data elements:

1. The restricted-use pesticide brand or product name;
2. The EPA registration number;
3. The total amount of the restricted-use pesticide product applied;
4. The month, day, and year of application;
5. The location of the treated area;
6. The crop, commodity, stored product, or site to which the restricted-use pesticide was applied;

7. The size of area treated;

8. The name of the certified applicator who applied or supervised the application of the restricted-use pesticide; and

9. The certificate number of the person named in number 8, who made or supervised the application.

Records of spot-treatments may require less information. A spot application is a treatment of an area totalling less than one-tenth of an acre made on the same day. For spot applications record:

1. Brand or product name;

2. EPA registration number;

3. Total amount applied;

4. Month, day, and year of application; and

5. Location of treated area, designated as a "spot application" (with a brief but concise description of the site).

Recording the name and certificate number of the certified private applicator who made or surpervised the RUP spot treatments is recommended, although it is not required by federal law.

(Note: ***Nursery and greenhouse RUP applications do NOT qualify as spot treatments. Greenhouses and nurseries must record all required recordkeeping data elements.*****)**

Certified applicators are required to make records available, upon request, to any Federal or State agency that deals with pesticide use or any health or environmental issue related to the use of restricted-use pesticides. In addition, medical professionals need access to records in the event of an exposure.

The certified applicator who applies a RUP is responsible for making and maintaining the application records required by the FACT Act. However, if a grower hires a commercial applicator to apply a RUP, the commercial applicator is responsible for the FACT Act recordkeeping.

The FACT Act requires commercial applicators to provide a copy of a restricted-use pesticide application record to the person for whom the application was made within 30 days of the application. However, if a private applicator has employees, he/she should obtain the record information prior to any for-hire application — RUP or not — to ensure compliance with WPS posting and notification requirements.

The Federal Worker Protection Standard (WPS) also involves some recordkeeping. Growers who employ field workers or pesticide handlers must display pesticide use and safety information at a central location. WPS requires growers who employ agricultural workers to make, maintain, and post pesticide application records. WPS application records must be kept for every pesticide used on the farm, not just for those that are restricted-use. Growers must post information about each application for 30 days after the expiration of the restricted-entry interval (REI). In addition, this information must be kept on file for two years. A WPS application list must record:

1. Brand or product name;

2. EPA registration number;

3. Active ingredient(s) of the product used;

4. Location of the treated area;

5. Time and date of the application; and

6. Restricted entry interval for the pesticide (duration and expiration).

WPS application information and safety data sheets (SDSs) must be displayed at a central location within 24 hours of the end of an application, and before workers enter the treated area. Application information and SDSs must be posted for 30 days after the restricted-entry interval (REI) expires—and kept on file for two years following. On-file application information and SDSs must be available to workers, handlers, designated/authorized representatives (identified in writing), or treating medical personnel upon request.

Additionally, employers will be required to keep records of WPS training. Please keep in touch with your local Extension agent for the latest information on record keeping. Your agent will also know about WPS and other pesticide laws and regulations affecting agricultural producers. A sample record-keeping form for producers follows at the end of this section.

Table 1.1 - Pesticide Application Record for Agricultural Producers in Virginia

Note: WPS requires posting of all pesticide application information at a central location for 30 days after the restricted-entry interval expires. USDA records of restricted-use pesticide applications must be kept for two years.

[3]Year Mo/Date / [1]Time of Day	[2]Crop or Commodity	[3]Location & Description of Treated Area	[3]Brand or Product Name	[1]Active Ingredient Common Name	[3]EPA Registration Number	[2]# of Units or Acres Treated	[2]Total Amount of Product Used (oz., lb., pt., qt., gal.)	[2]Applicator Information: (Name & Certificate No.)	[1]Restricted-Entry Interval (REI)	
									Duration (Hours)	Expiration (Mo/Date/ Time)

[1]Required for Worker Protection Standard

[2]Required for Federal Pesticide Recordkeeping Requirements, USDA

[3]Required for Worker Protection Standard and Federal Pesticide Recordkeeping Requirements

Prepared by Virginia Cooperative Extension and VDACS (Virginia Department of Agriculture and Consumer Services), Office of Pesticide Services, 1999.

Table 1.2 - Commercial Applicator Pesticide Application Record

Note: The Commonwealth of Virginia requires commercial applicator records of pesticide applications to be kept for two years.

Name, Address, and Telephone Number of Property Owner	Address and Location of the Application Site (if different than recorded in left column)	Certified Applicator's Name and Certificate Number	Date: (Month, Day, Year)	Type of Plants, Crops, Animals, or Sites Treated	Principal Pest to be Controlled	Acreage, Area, or Number of Plants or Animals Treated	Brand or Common Name of Pesticide	EPA Product Registration Number	Total Amount of Product *and* of Diluent (if used)	Type of Application Equipment

Prepared by Virginia Cooperative Extension and VDACS (Virginia Department of Agriculture and Consumer Services) Office of Pesticide Services, 2006.

VII. Report Pesticide Accidents

Pesticide accidents or incidents that constitute a threat to any person, to public health or safety, and/or to the environment must be reported. Telephone notification is required within 48 hours. A written report describing the accident or incident must be filed within 10 days of the initial notification.

Telephone contacts and written reports should be directed to:

Virginia Department of Agriculture and Consumer Services
Office of Pesticide Services/Enforcement and Field Operations
P. O. Box 1163, Richmond, VA 23218
(804) 371-6560

In the event of an emergency release, notify local authorities immediately, and contact the Virginia Department of Emergency Management (VDEM) Operations Center at 1-800-468-8892 or (804) 674-2400.

If the accident or incident involves a spill which may pose a threat to people and/or the environment, the applicator should contact VDACS/OPS to determine whether the release is governed under SARA Title III (the Community Right-to-Know Law). The chemical hazard and the volume of the released chemical determine reporting under SARA Title III, which involves notifying the National Response Center at 1-800-424-8802.

VIII. Obtain a Pesticide Business License

Certified commercial applicators working *for hire* must have a pesticide business license or work for someone who does. Registered technicians working *for hire* must work for a properly licensed pesticide business.

The Virginia Department of Agriculture and Consumer Services is responsible for all enforcement aspects of the Virginia Pesticide Control Act and its regulations. Business licenses may be suspended or revoked if the holder, in the eyes of VDACS, presents a substantial danger or threat of danger to public health and safety or to the environment.

IX. Ensure Financial Responsibility

The commercial applicator *for hire*, or his/her employer, must provide VDACS with evidence of financial responsibility protecting persons who may suffer legal damages as a result of use of any pesticide by the applicator. The coverage must provide for liability that may result from the operation of a pesticide business and for liability relating to completed operations (for businesses that *apply* pesticides). The Commonwealth insures Virginia's state employees for activities performed as official job duties.

Sources of Information

Questions regarding federal and state pesticide regulations, the legal responsibilities of pesticide users, and certificate/license status:

Virginia Department of Agriculture and Consumer Services (VDACS)
Office of Pesticide Services (OPS)
P.O. Box 1163
Richmond, VA 23218

(804) 786-3798
www.vdacs.virginia.gov/pesticides/

Questions regarding federal and state pesticide regulations, legal responsibilities of pesticide users, pesticide management techniques, and sources of approved preparatory training sessions and recertification workshops:

Virginia Cooperative Extension (VCE)
Virginia Tech Pesticide Programs (MC 0409)
302 Agnew Hall
460 West Campus Drive
Virginia Tech
Blacksburg, VA 24061

(540) 231-6543
www.vtpp.ext.vt.edu/ or *vtpp.org*

Pest management information available on the World Wide Web from Virginia Tech:

Department of Entomology: *www.ento.vt.edu*

Department of Plant Pathology, Physiology, and Weed Science: *www.ppws.vt.edu/*

The Hazard Communication Standard

As of May 23, 1988, all employers must adhere to restrictions under the OSHA Hazard Communication Standard. This standard is a worker right-to-know law, which requires employers to train and inform all workers who may be exposed to hazardous chemicals in the workplace. The new law especially targets operations, including agricultural operators, with 10 or more employees. These employers must file a Hazard Communication Plan in their offices and inform their employees of the content of this plan. These employers must obtain and file Material Safety Data Sheets (MSDS) for all chemicals used by their employees. In addition, employers must provide training on the information in the plan, the MSDS, and chemical labeling to each employee who may be potentially exposed to a chemical hazard. This training is very specific to each operation and therefore must be conducted by the employer. Also, when new chemical hazards are introduced into the workplace, the employer must provide new training to protect the employee.

For agricultural operators with fewer than 10 employees, it is not necessary to develop and file a Hazard Communication Plan. However, MSDS and Labeling should be maintained, and employees must be informed of proper use and safe handling according to the MSDS and labeling information. For more information on the standard, contact your local Extension office or the Virginia Department of Labor and Industry.

Community Right To Know (SARA Title III)

The Superfund Amendments and Reauthorization Act of 1986 (SARA Title III) was drafted to require industries and others producing or storing hazardous chemicals to provide communities with the identity and amounts of chemicals located in their vicinity. The law also addresses the need for communities to establish emergency response plans to follow in the event of an emergency.

Section 302 requires a facility to send a one-time written notification to the Virginia Emergency Response Council (VERC) and its jurisdictional local Emergency Planning Committee (LEPC) if the presence of an Extreme Hazardous Substanee (EHS) at the facility, at any time, exceeds or equals the threshold planning quantity (TPQ) for that material. For more information, visit this section of the Virginia Department of Environmental Quality website: VAEmergencyResponsePlanningOrganizations.aspx (Navigation: DEQ, Programs, Air, Air Quality Planning & Emissions, SARA Title III, VA Emergency Response & Planning Organizations.)

The amount of formulated product that may be stored but not reported depends on the active ingredient itself and percent active ingredient in the product. If a product was 10 percent active ingredient and the TPQ was 10 pounds, then you could store up to 100 pounds of the formulated product before you would be required to report to local authorities.

In the event of a spill, contact local authorities immediately. For help with spill management, contact the Virginia Department of Emergency Management's Operations Center at (800) 468-8892 or (804) 674-2400. Spills that pose a threat to people and/or the environment must be reported to VDACS Office of Pesticide Services at (804) 371-6560. If the spill is of a reportable quantity (information available from VDACS), then contact the National Response Center (800) 424-8802.

Worker Protection Standard for Agricultural Pesticides

The EPA's Worker Protection Standard for Agricultural Pesticides (WPS) was developed to protect workers and pesticide handlers from exposures to agricultural pesticides, thus reducing the risks of pesticide poisonings and injuries. The WPS targets workers who perform hand-labor operations in agricultural fields, nurseries, greenhouses, and forests treated with pesticides. It also impacts employees who handle pesticides (mix, load, apply, etc.) for use in those locations. Labels of pesticides used in agricultural plant production, nursery/greenhouse operations, and forestry refer to WPS requirements.

WPS has requirements referenced ***(but NOT explained in detail)*** on pesticide labels. You will find general information about WPS in the Virginia Core Manual: *Applying Pesticides Correctly.* For comprehensive information, consult the EPA manual: *The Worker Protection Standard for Agricultural Pesticides – How to Comply.* In addition, a WPS *Summary Guide* produced by VDACS Office of Pesticide Services is available on the agency's website. It provides a great deal of compliance assistance information, including a self inspection checklist. If you have questions about the WPS, please contact your local Extension agent or call the Virginia Department of Agriculture and Consumer Services/Office of Pesticide Services at (804) 786-4845.

Groundwater Restrictions

The EPA and Congress have placed special emphasis on protection of water resources. Water quality programs are being implemented in education and research programs throughout the country. Federal and state efforts to protect groundwater are resulting in revised pesticide product label instructions and new use restrictions. Applicators should expect a continued emphasis on protection of water supplies.

As an applicator and landowner, you must adhere to label restrictions and should follow the best management practices in handling pesticides. Particular attention should be given to prevention of spills, backsiphoning, and disposal of pesticides. Applicators can do much to prevent contamination by following label directions and maintaining and calibrating application equipment. In Virginia, it is against the law to use equipment in poor repair or to fill tanks directly from a water source without an anti-siphon device in use on the spray equipment.

For more information on anti-siphon devices, sometimes referred to as back-flow preventers, contact your local water authority. ***(Note: most check valves do not qualify as "anti-siphon" devices because they do not break the siphon.)***

Endangered Species Pesticide Use Restrictions

Under the authority of the Endangered Species Act and FIFRA, the U.S. Fish and Wildlife Service and the EPA may restrict pesticide use where such use jeopardizes a federally listed threatened or endangered species.

The EPA's Endangered Species Protection Program (ESPP) is designed to protect federally listed endangered and threatened species from exposure to pesticides. The program's goal is to ensure that pesticide use does not adversely affect the survival, reproduction, and/or food supply of listed species.

The agency will inform users of enforceable use limitations by means of ESPP Bulletins. Bulletins will provide product users with information about geographically-specific pesticide use restrictions. Bulletins will be referenced on pesticide product labels and available on the internet at *www.epa.gov/espp* or by calling 1-800-447-3813. (Internet search tip: At the main ESPP page, click on "Bulletins Live!" to view pesticide use limitations for a specific county or active ingredient.)

Applicators using a product with an ESPP reference on the label must check for—and access—a bulletin no more than 6 months prior to applying this pesticide. Failure to follow label-referenced bulletin instructions and provisions, whether or not that failure results in harm to a listed species, is subject to enforcement under the misuse provisions of FIFRA and state law.

Note that not all pesticide active ingredients will have restrictions, and not all pesticide uses are banned in restricted areas.

Please observe pesticide labeling for changes and keep up to date on this topic. Information is available through your local Extension office or the Virginia Department of Agriculture and Consumer Services.

Guidelines for Disposal of Pesticides and Empty Containers

Always dispose of pesticides and empty containers so they pose no hazard to humans or the environment. Follow label directions and consult your local Extension agent if you have questions. The best solution to the problem of what to do with excess pesticide is to avoid having any. Waste minimization strategies include:

- Buy only the amount needed for a year or a growing season.
- Minimize the amount of product kept in storage.
- Calculate how much diluted pesticide you will need for a job, and mix only that amount.
- Apply pesticide with properly calibrated equipment.
- Use all pesticides in accordance with label instructions.
- Purchase pesticide products packaged in such a way as to minimize disposal problems, or packaged in containers that have legal disposal operations available in your area.

The best disposal option for excess usable pesticide is to find a way to apply the material as directed by the label. Please note that the total amount of active ingredient applied to a site, including all previous applications, must not exceed the rate and frequency allowed by the labeling.

Other pesticide waste disposal options include:

- Follow valid label disposal directions.
- Return product to the dealer, formulator, or manufacturer.
- Participate in a federal indemnification program for canceled/suspended products.
- Employ a professional waste-disposal firm.
- Participate in a state or local "clean day," such as the Virginia Pesticide Control Board-sponsored Pesticide Disposal Program.

Pesticide wastes that cannot be disposed of right away should be marked to indicate the contents and then stored safely and correctly until legal disposal is possible.

EPA container and containment regulations require registrants to place instructions for container cleaning on product labels. In addition, users should read the label to learn if a container is refillable or non-refillable. One-way, non-refillable containers will have guidelines for proper cleaning and disposal.

Federal law (FIFRA) requires pesticide applicators to rinse "empty" pesticide containers before discarding them. Pesticide containers that have been properly rinsed can be handled and disposed of as non-hazardous solid waste. However, the containers of some commonly used pesticides are classified as hazardous waste if not properly rinsed. Proper disposal of hazardous waste is highly regulated. Improper disposal of a hazardous waste can result in high fines and/or criminal penalties.

A "drip-drained" pesticide container contains product. Immediate and proper rinsing generally removes more than 99 percent of container residues. Properly rinsed pesticide containers pose minimal risk to people and their environment.

There are two methods for proper rinsing:

- Triple Rinsing, and
- Pressure Rinsing.

Pesticide containers should be rinsed as soon as they are emptied. So, the time to rinse is during mixing/loading. If containers are rinsed as soon as they are emptied, the rinse water (rinsate) can be added to the spray tank. This avoids the problem of rinsate disposal and makes sure that nothing is wasted. If containers are rinsed immediately, residues do not have time to dry inside. Dried residues are difficult (or impossible!) to remove. Never postpone container rinsing!

Be sure to wear protective clothing when rinsing pesticide containers. See the product label for information on what to wear.

Pesticide Phone Sales – Buyers Beware

Telephone solicitation of pesticides is a chronic problem for growers and applicators in Virginia. As a general rule, applicators should be wary about buying pesticide products "sight unseen." Here is a general description of problems often associated with telephone sales offers:

1. The product actually contains a very low percentage of pesticide active ingredient per unit volume. So, it is actually quite expensive to use on a per-area basis.
2. Often, weed control products contain a small proportion of herbicide formulated with diesel fuel or some other petroleum product. These are generally not recommended and not usable in many situations.
3. The product name is similar to the trade name of another well-known pesticide product or sounds like one from a major pesticide manufacturer's line.
4. The solicitor gives an EPA establishment number but not an EPA registration number. In many cases, this is because the product is not registered with EPA.
5. The product is not registered with VDACS, despite being offered for sale in the commonwealth. This is an illegal practice.

If the potential buyer wishes to follow up on a telephone sales solicitation, he/she should ask for the following information: company name, address, and telephone number; name of salesperson; product name; product registration number; percent active ingredient(s) per unit volume; use site(s); and use rate(s). It is wise to ask for a copy of the label and product MSDS before making a commitment to purchase. If a telephone salesperson does not provide the information you request, the "bargain" is better passed by.

Information given over the telephone can be verified, and the claims for the product can be compared to industry standards or known performance data for the product's active ingredient(s). To check federal and state product registrations, call:

VDACS/Office of Pesticide Services (804) 786-3798 or VCE/Virginia Tech Pesticide Programs (540) 231-6543

If you receive what you suspect to be an improper sales offer, you're encouraged to get as much information as possible and make a complaint to VDACS Office of Pesticide Services by calling (804) 786-3798.

Based on the difficulties associated with telephone solicitations, pesticide users are advised to buy from established dealers and from sellers they know.

Pesticide Use Precautions

Efficient and economical control of insects, plant diseases, and weeds is a factor in the production of all crops. Both management costs and losses resulting from inadequate control can reach tremendous proportions. The use of today's pesticides requires a great degree of precision. In some instances, rates are given in ounces per acre. This requires that pesticide users know how to calibrate equipment and follow detailed directions on product labels.

All pesticides should be used with care. The following suggestions will help minimize the likelihood of injury (from exposure to such chemicals) to people, animals, and non-target plants and animals.

Read the Label: Before buying and applying pesticides, always read all label directions. Follow them exactly when you handle and apply the product. Notice warnings and cautions before opening the container. Repeat the process every time, no matter how often you use a pesticide. The label directions for pesticides often change. Apply materials only on crops specified, at the rate(s) and times indicated on the product label.

Store Pesticides Properly: A suitable storage site for pesticides protects:

• People and animals from accidental exposure.

• The environment from accidental contamination.

• Stored products from damage (from temperature extremes and excess moisture).

• The pesticides from theft, vandalism, and unauthorized use.

All pesticides should be stored under lock and key, outside the home. Storage facilities should be well-ventilated and well-lit. Pesticide storage areas should be located away from water sources such as ponds or wells. However, a supply of clean water for decontamination is recommended. Use non-porous materials for flooring and shelving. It is important to arrange materials in the storage site so cross-contamination does not occur. Do not store pesticides with food, feed, seed, or fertilizer. An emergency plan should be worked out with local authorities, notifying them of the contents of pesticide storage facilities. If susbstantial quantities of highly toxic pesticides are stored, you must notify (according to law) your local Emergency Response Council. Proper records should be maintained to provide an up-to-date list of contents at all times. Always store pesticides in their original containers and keep them tightly closed. Never keep pesticides in unmarked containers.

Avoid Physical Contact with Pesticides: Never smoke, eat, chew tobacco, or use snuff while handling or applying pesticides. Use the protective clothing and equipment the label requires. Protect your eyes from pesticides at all times. Avoid inhaling sprays or dusts. Do not spill pesticides on skin or clothing. If they are accidentally spilled, remove contaminated clothing immediately and wash exposed skin thoroughly. Wash hands and face and change to clean clothing after applying pesticides. Wash protective clothing, separate from the family laundry, each day, before re-use. Do not spray with leaking hoses or connections. Do not use the mouth to siphon liquids from containers or to blow out clogged lines, nozzles, etc. **See a doctor if symptoms of illness occur during or after the use of pesticides.** A list of Poison Control Centers located in and around Virginia is included in this guide.

Apply Pesticides Carefully: Successful pest control requires application of the correct amount of pesticide uniformly over a targeted area. Pesticide application is a precise operation requiring reliable, properly calibrated equipment. For example, many herbicides have narrow ranges of selectivity. At the suggested rates of application, they will generally control weeds without damaging the crop, but at a slightly higher rate they may damage or kill the crop.

Dispose of Pesticides Correctly: All pesticides should be disposed of according to container directions. All empty containers should be triple rinsed (or equivalent), crushed, and disposed of as directed by the product label. Rinsate should be placed in the spray tank at the time of mixing. Leftover diluted pesticides should be used according to label directions. Leftover concentrates should be disposed of according to EPA guidelines only after exhausting other options. Amounts of chemicals that do not qualify for disposal under these guidelines must be disposed of by an approved hazardous-waste handler.

Protect Pets, Fish, and Wildlife: To protect fish and other wildlife, do not apply pesticides to streams or areas where drainage may be expected to enter waterways unless the product is labeled for use in such areas. Incorporate all granular pesticides into the soil to prevent birds and other animals from eating particles. Scout fields for dead animals and birds before and after application. Remove any carcasses to prevent poisoning of birds-of-prey and scavengers. Report any wildlife poisonings to the Virginia Department of Game and Inland Fisheries. Be aware of bee cautions; see section to follow on protecting honeybees from pesticides.

Cover food and water containers when treating around livestock or pet areas. Do not discard leftover materials into drainage channels. Confine chemicals to the property and crop being treated.

Prevent Drift: Drift can be a problem with any pesticide. However, herbicide drift is the most commonly encountered cause of pesticide damage to susceptible crops. No pesticide can be applied by either aerial or ground equipment without some drift. Spray drift is influenced by a number of factors, including, droplet size, environmental conditions, and equipment configuration and operation.

To minimize particle drift, application should be made as close to the ground as possible using spray nozzles which produce large droplets and eliminate “fines.” In some instances, spray additives may be used to reduce drift.

Some highly volatile herbicide products are capable of causing injury to off-target plants by movement in the vapor phase after the spray has dried. Use low-volatility formulations and avoid making spray applications when the temperature is high and humidity is low to reduce the possibility of vapor drift.

The farmer and the applicator are liable for damages caused by particle drift or volatility.

Select Pesticide Products Wisely: Two or more pesticides may be equally effective in a given situation. Also, the same active ingredient may be available in a variety of formulations. Your selection of a pesticide and its formulation will be determined by the:

1. Site/crop to be treated.
2. Pest species involved.

3. Product availability.
4. Equipment availability.
5. Hazards to humans, domestic animals, wildlife, and desirable plants.
6. Time of application.
7. Relative total costs of materials and application.

All recommended rates of application are based on the amount of active ingredient in a given product. Many commercial products vary in the percentage of active ingredient. The label will give the exact amount of active ingredient in the container and the amount of product to be used in a given area.

To make an accurate cost comparison, it is wise to calculate the cost per area. In general, concentrated products are more economical. However, they may require more handling (measuring, mixing, and loading) than ready-to-use products.

Poisonings

The procedure to be followed ***in case of suspected poisoning****:*

(1) Call a physician immediately. If a doctor is not available, take the exposed person to the nearest hospital emergency room along with the product label and safety data sheet. (If you take a label affixed to a product container, do not carry it in the passenger compartment of a vehicle.)

(2) If necessary, the attending physician will call the nearest poison control center for further information on toxicity of the suspected agent, treatment, and prognosis. The EPA publication *Recognition and Management of Pesticide Poisonings* is an invaluable resource and can be viewed, downloaded, or ordered online.

(3) You may call a poison control center for information. However, don't delay seeking medical attention.

NOTE: This information is correct to the best of our knowledge. Listings below were checked for this revision. Please note that this information is subject to change. You should confirm locations and phone numbers of nearby emergency contacts now rather than at the time of a poisoning incident.

Poison Information and Treatment Resources For Virginians

National Poison Control Center

Toll-Free Number for all U.S.: (800) 222-1222

Calls to this number will be routed to the closest Regional/Area Poison Control Center.

Website for the American Association of Poison Control Centers is: www.aapcc.org/

Regional Poison Control Center

Provides 24-hour information and consultation services by Poison Information Specialists and board-certified Medical Toxicologists. Located in a hospital equipped for all toxicologic (poison) emergencies.

CHARLOTTESVILLE, VA.
Blue Ridge Poison Center
University of Virginia Health Systems
Jefferson Park Place
1222 Jefferson Park Avenue
Charlottesville, VA 22908
(800) 222-1222 or (800) 451-1428
www.medicine.virginia.edu/community-service/centers/brpc

Area Poison Control Centers

Hospitals with staff who will provide poison information by telephone. Hospitals equipped for most toxicologic emergencies.

WASHINGTON, D.C.
National Capital Poison Center
3201 New Mexico Ave., NW, Suite 310
Washington, DC 20016
(800) 222-1222
www.poison.org/

CHARLESTON, W.V.
West Virginia Poison Center
3110 MacCorkle Ave., SE
Charleston, WV 25304
(800) 222-1222
www.wvpoisoncenter.org/

RICHMOND, VA.
Virginia Poison Center
Virginia Commonwealth University Medical Center, VCU Health System
1250 East Marshall Street
PO Box 980522 - Richmond, VA - 23298-0522
(800) 222-1222 or (804) 828-9123
(Calls from Central and Eastern Va. only)
www.virginiapoison.org or www.vapoison.org

A complete list of Poison Control Centers is available on the World Wide Web at www.aapcc.org/

Pesticide Information Directory

This directory is intended for use by persons who need assistance with general and emergency pesticide-related information. We hope that it will save time and money by directing you to the proper government and industry sources.

The pages that follow include **Emergency Information, General Information, and Industry Associations**. In the blank lines provided, please take time to list your local phone numbers for these sources. In the case of an emergency, it might save a life, as well as possible added expense and inconvenience. Keep a copy of this guide, with this directory section marked, near your phone and/or in your service vehicle for future reference.

Emergency Information

Poisonings For Treatment:	If poisoned, have someone take you immediately to your nearest emergency room with the label of the container.	
My Nearest Poison Control Center Is Located At:	The blanks below are supplied for recording the name and telephone number of the nearest poison control center. Please refer to the Regional and Area Poison Control Centers listed previously in this section. _____ _____ _____	
Phone number	_____	
Spills accidents and other related emergencies	CHEMTREC (for assistance) Chemical Transportation Emergency Center Industry assistance with clean-up procedures, etc.	*(800) 262-8200* *chemtrec.com/*
Accidents or **Incidents** that constitute a threat to any person, public safety and health, or the environment must be reported to:	Virginia Department of Agriculture and Consumer Services Office of Pesticide Services Field Operations	(804) 371-6560
For Assistance with Spills and Emergencies Take time to write your local emergency numbers in the space provided.	State Police	_____
	Fire Department	_____
	Ambulance	_____
	Virginia Department of Emergency Management (VDEM) **Emergency Operations Center** *pio@vdem.virginia.gov* - E-mail monitored during regular business hours. *http://www.vaemergency.gov/aboutus/locationscontact-us*	(804) 897-6500 (Mon-Fri) 8:15am-5pm **(804) 674-2400** **(800) 468-8892** 24 hours / day
	Local Emergency Services Coordinator	_____
	Local Emergency Response Council	_____

General Information

General Information about pest identification and management and about pesticide safety and use patterns	**Virginia Tech** Your Local Extension Office *www.ext.vt.edu/offices/* Virginia Tech Pesticide Programs (0409) Blacksburg, VA 24061 *www.vtpp.ext.vt.edu/* or *vtpp.org*	_____ (540) 231-6543
Regulatory Information including certificate or license status	**Virginia Dept. of Agriculture and Consumer Services** Office of Pesticide Services 102 Governor Street P.O. Box 1163 Richmond, VA 23218 *www.vdacs.virginia.gov/pesticides/*	(804) 786-3798
Community Right-to-know Environmental Programs	**Department of Environmental Quality** 629 East Main Street P.O. Box 1105 Richmond, VA 23218 *http://www.deq.virginia.gov.*	(804) 698-4000 (800) 592-5482
EPA Cooperator for general pesticide information	**National Pesticide Information Center (NPIC)** Ag. Chemistry Extension Oregon State University 310 Weniger Hall Corvallis, OR 97331-6502 *npic.orst.edu/*	(800) 858-7378 M-F 11:00 am – 3:00 pm ET
Animal Poisonings Assistance	**Va.-Md. Regional College of Veterinary Medicine** 265 Duck Pond Drive Virginia Tech (0442) Blacksburg, VA 24061 *www.vetmed.vt.edu/*	(540) 231-4621 (hospital) Ask your veterinarian to call on your behalf
	ASPCA Animal Poison Control Center $65.00 consultation fee, credit cards accepted University of Illinois at Urbana-Champaign College of Veterinary Medicine 2001 S. Lincoln Ave. Urbana, IL 61802 *aspca.org/pet-care/animal-poison-control*	(888) 426-4435
RCRA & Superfund Industry Assistance Hotline	**EPA - Resource Conservation Recovery Act** (Superfund regulations) *www.epa.gov/rcraonline/* and *http://www2.epa.gov/rcra*	(800) 424-9346
Toxicology Information	**Virginia Dept. of Health** Division of Environmental Epidemiology/Toxicology Program 109 Governor Street P.O. Box 2448 Richmond, VA 23218 *www.vdh.virginia.gov/*	(804) 864-8127 (toxic substance information)

General Information (cont.)

EPA Safe Drinking Water Hotline	For information on drinking water regulations and pesticides in drinking water. *www.epa.gov/safewater/*	(800) 426-4791 M-F 10:00 am-4:00 pm
Hazard Communication/OSHA Compliance Information	**Virginia Dept. of Labor & Industry** 600 East Main Street Suite 207 Richmond, VA 23219 *www.doli.virginia.gov/*	(804) 371-2327 M-F 8:15 am – 5:00 pm

Industry Associations

Croplife America 1156 15th St., N.W. Washington, DC 20005	(202) 296-1585 *www.croplifeamerica.org/*
Virginia Crop Production Association, Inc. (VCPA) 6442 Cross Keys Road Mt. Crawford, VA 22841	(540) 234-9408 *www.vacropproduction.com*
Responsible Industry for a Sound Environment (RISE) 1156 15th Street, N.W., Suite 400 Washington, DC 20005	(202) 872-3860 *www.pestfacts.org/*
National Pest Management Association (NPMA) 10460 North Street Fairfax, VA 22030	(703) 352-6762 (800) 678-6722 *www.pestworld.org/* (consumer info.) *www.npmapestworld.org* (PMPs)
Virginia Pest Management Association (VPMA) 102 Bell Road Fredericksburg, VA 22405 P. O. Box 7161 Fredericksburg, VA 22404-7161	(540) 374-9200 (877) 875-8722 *www.vpmaonline.com/*
National Association of Landscape Professionals (NALP) 950 Herndon Parkway, Suite 450 Herndon, VA 20170	(800) 395-2522 (703) 736-9666 *www.landscapeprofessionals.org*
Virginia Turfgrass Council (VTC) P.O. Box 5989 Virginia Beach, VA 23471	(757) 464-1004 *www.vaturf.org/*
Virginia Nursery and Landscape Association 383 Coal Hollow Road Christiansburg, VA 24073-6721	(800) 476-0055 (540) 382-0943 *www.vnla.org/*

This directory neither endorses the groups listed nor intends to exclude those not listed. To be included in future revisions contact P.A. Hipkins, Virginia Tech Pesticide Programs, 302 Agnew Hall (0409) Virginia Tech, Blacksburg, VA 24061, telephone: (540) 231-8957.

Protective Clothing and Equipment

Dermal exposures account for most of all handler exposures that occur during liquid spray applications. Wearing protective clothing will prevent pesticides from coming into contact with the skin. Any body covering will provide some protection, because dermal absorption is reduced to some degree by a fabric barrier. Protective clothing may be classified according to the part of the body it protects; i.e., feet (boots and shoes), hands (gloves), eyes (goggles and faceshields), head (hats and hoods), and trunk and arms and/or legs (jackets, shirts, pants, coveralls, overalls, and raincoats).

Because of its comfort, conventional work clothing is worn most often. Wearing cotton clothing with a stain-repellent finish provides some protection from dusts and spray mists. However, cotton fabric will provide little or no protection from accidental spills of concentrated pesticides.

Use chemical-resistant garments when handling pesticide concentrates and applying liquids. Adjust work habits and take precautions to prevent heat exhaustion.

Cleaning/Laundering Recommendations

Laundering Information for Pesticide-contaminated Clothing - Before laundering, read the pesticide label. Key words on all pesticide labels identify the toxicity of the product: **DANGER POISON** (highly toxic), **WARNING** (moderately toxic), and **CAUTION** (slightly toxic). Wear waterproof gloves when handling pesticide-contaminated clothing and equipment.

1. **Cotton or Denim Fabric** - Hold and wash contaminated clothing separately from the family wash. Pesticide residues may be transferred from contaminated clothing to other clothing in a hamper, and clothing worn when handling pesticides requires extra washing steps.

   Note: Regular laundering will not clean fabric contaminated with highly toxic and/or concentrated pesticide. Clothing saturated with either should be discarded, after slashing/cutting to make the item unusable.

   Pre-treating contaminated clothing before washing will help remove pesticide particles from the fabric. This can be done by:

   1. Pre-soaking in a suitable container.
   2. Pre-rinsing with agitation in an automatic washing machine.
   3. Spraying/hosing garments outdoors.
   4. Pretreating soiled areas with heavy-duty liquid detergent or a stain-removal product.

   Clothing worn while using slightly toxic pesticides may be effectively laundered in one machine washing. It is strongly recommended that multiple washings be used on clothing worn while applying more toxic pesticides. Also, multiple wash cycles are recommended for protective clothing treated with starch or water/stain repellents.

   When machine-washing, use a full tank of hot water. Choose heavy-duty liquid detergent. Heavy-duty detergents are particularly effective in removing oily soils (the kind emulsifiable concentrate formulations make). In addition, their performance is not affected by water hardness. Increasing the amount of detergent used is recommended, especially if the fabric has been treated with a stain/water repellent finish.

   If several garments are contaminated, wash only one or two garments in a single load. Wash garments contaminated by the same pesticide(s) together. Use a full water level to allow the water to thoroughly flush the fabric.

   Clothing exposed to pesticides should be laundered daily. It is much easier to remove pesticides from clothing by daily laundering than attempting to remove residues that have accumulated over a period of time.

   Pesticide carry-over to subsequent laundry loads is possible because the washing machine may retain residues, which are then released in following loads. Rinse the washing machine with an “empty load,” using hot water, the same detergent, and machine settings and cycles used for laundering contaminated clothing.

   Line drying is recommended for these items. Many pesticides break down when exposed to heat and sunlight. Line drying eliminates the possibility of residues collecting in the dryer.

   When dry, apply fabric starch or stain repellent on clothing.

2. **Vinyl-coated fabric, neoprene, or rubber** - This type of outer protective clothing should be pan-washed in warm water using a good detergent. Double or triple washing of heavily contaminated outer protective clothing is desirable. Rinse through two water changes and hang up to air dry. Wash after each use.

3. **Gloves and boots** should be rinsed before taking them off, then pan-washed inside and out using a good detergent with several rinses. Remember, gloves must be clean inside because the inner surface will be in contact with your skin. Wash rubber boots the same as gloves.

4. **Respirators** require special care. Wash inside with a cloth, detergent, and warm water. Change filters according to instructions on the original container. Keep the respirator in a plastic bag, original container, or some other suitable container when it is not being used. Keep the respirator properly adjusted to your face. Filters and prefilters should be kept sealed in a plastic bag when not in use.

5. **Goggles** should be washed with a mild detergent so as not to scratch the lens.

Give all of your protective clothing and equipment the best of care. They may save your life.

Chemical Resistance

Many pesticide labels require the use of specific personal protective equipment (PPE) — clothing and devices that protect the body from contact with pesticides or pesticide residues. Some labels call for **chemical-resistant** PPE — items that the pesticide cannot pass through during the time it takes to complete the task. The labels of a few pesticides, such as some fumigants, prohibit the use of chemical-resistant PPE. Please refer to specific product labels for details.

Most chemical-resistant PPE items are plastic or rubber. But not all these materials are equally resistant to all pesticides and under all conditions.

Three factors affect a material's chemical resistance: the exposure time, the exposure situation, and the chemical properties of the pesticide product to which the material is exposed.

Unless the pesticide label directs otherwise, do not use items that are made of — or lined with — absorbent materials such as cotton, leather, or canvas. These materials are not chemical-resistant, and they are difficult or impossible to clean after a pesticide gets on them. Even dry formulations can move quickly through woven materials and may remain in the fibers.

Look for PPE items whose labels state that the materials have been tested using American Society for Testing Materials (ASTM) test methods for chemical resistance, such as test method F739-91. Footwear — and in most cases, gloves — should be at least 14 mils thick.

Pesticides can leak through stitching holes and gaps in seams. For chemical resistance, PPE should have sealed seams.

Any waterproof material is resistant to dry and to water-based pesticides.

Dry pesticides include dusts, granules, pellets, wettable powders, dry flowables (water-dispersible granules), microencapsulated products, soluble powders, and some baits. Water-based pesticides include soluble powders and some solutions.

The type of material that is resistant to non-water-based liquid pesticides depends on the contents of the formulation.

Liquid pesticides that are not water-based may be emulsifiable concentrates, ultra-low-volume and low-volume concentrates, flowables, aerosols, dormant oils, and invert emulsions. Common solvents are xylene, fuel oil, petroleum distillates, and alcohol.

Choosing Chemical-Resistant PPE

Materials are not listed on label.

If the pesticide label requires the use of chemical-resistant PPE but does not indicate the types of materials that are resistant to the product, select sturdy barrier-laminate, butyl, or nitrile materials. Then watch for signs that the material is not resistant to the product. If it is not, it may:

- Change color.
- Become soft or spongy.
- Swell or bubble.
- Dissolve or become jelly-like.
- Crack or develop holes.
- Become stiff or brittle.

If any of these changes occur, discard the item and choose another type of material for the task.

Chemical-Resistance Category Listed on Label.

If the pesticide label specifies the PPE materials that **must** be worn when using the product, follow those instructions.

Some labels may list **examples** of PPE materials that are highly resistant to the product. The label may say, for example: "Wear chemical-resistant gloves, such as barrier laminate, butyl, nitrile, or viton." You may choose PPE items made from any of the listed materials.

Pesticide labels sometimes specify a chemical-resistance category (A through H) for PPE to use when working with the product. This allows you to consult an EPA chemical-resistance chart (see below) for PPE material options.

Table 1.3 - EPA Chemical Resistance Category Selection Chart

For use when PPE section on pesticide label lists chemical resistance category

Selection Category Listed On Pesticide Label	Type Of Personal Protectlve Material							
	Barrier Laminate ≥ 14 mils	Butyl Rubber ≥ 14 mils	Nitrile Rubber ≥ 14 mils	Neoprene Rubber ≥ 14 mils	Natural Rubber[1]	Polyethylene	Polyvinyl Chloride (PVC) ≥ 14 mils	Viton ≥ 14 mils
A (dry and water-based formulations)	high	high	high	high	high	high	high	high
B	high	high	slight	slight	none	slight	slight	slight
C	high	high	high	high	moderate	moderate	high	high
D	high	high	moderate	moderate	none	none	none	slight
E	high	slight	high	high	slight	none	moderate	high
F	high	high	high	moderate	slight	none	slight	high
G	high	slight	slight	slight	none	none	none	high
H	high	slight	slight	slight	none	none	none	high

[1]Includes natural rubber blends and laminates

HIGH: Highly chemical resistant. Clean or replace PPE at end of each day's work period. Rinse off pesticides at rest breaks.
MODERATE: Moderately chemical resistant. Clean or replace PPE within an hour or two of contact.
SLIGHT: Slightly chemical resistant. Clean or replace PPE within ten minutes of contact.
NONE: No chemical resistance. Do not wear this type of material as PPE when contact is possible.

When choosing an appropriate material, consider the dexterity needed for the task and whether the material will withstand the physical demands of the task. The PPE will protect you if:

- the item is in good condition, and no punctures, tears, or abrasions allow pesticide to penetrate the material, and
- pesticide does not get inside the PPE through careless practices, such as allowing pesticide to run into gloves or footwear or putting the PPE on over already-contaminated hands or feet.

Highly Resistant PPE

A rating of **high** means that the material is highly resistant to pesticides in that category. PPE made of this type of material can be expected to protect you for an 8-hour work period. The outside of the PPE, especially gloves, should be washed at rest breaks — about once every 4 hours. Highly resistant PPE is a good choice when handling pesticides, especially concentrates, for long periods of time.

Moderately Resistant PPE

A rating of **moderate** means that the material is moderately resistant to pesticides in that category. PPE made of this type of material can be expected to protect you for 1 or 2 hours. After that, replace the PPE with clean chemical-resistant PPE or thoroughly wash the outside of the PPE with soap and water. Moderately resistant PPE may be a good choice for pesticide handling tasks that last only a couple of hours.

Slightly Resistant PPE

A rating of **slight** means that the material is only slightly resistant to pesticides in that category. PPE made of this type of material can be expected to protect you for only a few minutes after exposure to the pesticide product. Slightly resistant PPE is not a good choice for most pesticide handling tasks.

Inexpensive disposable gloves or shoe covers, such as those made from polyethylene, may be useful for such brief tasks as:

- Adjusting contaminated parts of equipment.
- Unclogging or adjusting nozzles.
- Opening pesticide containers.
- Moving open pesticide containers or containers with pesticides on the outside.
- Handling heavily contaminated PPE.
- Climbing in and out of cabs or cockpits where the outside of the equipment is contaminated.
- Operating closed systems.

These disposable PPE items should be used only once, for a very short-term task, and then discarded. At the end of the task, it is a good idea to wash the outside of the gloves or shoe covers first, and then remove them by turning them inside out. Discard them so they cannot be reused.

Table 1.4 - Tables of Weights and Measures

Weights:
28.35 grams = 1 ounce
16 ounces = 1 pound = 453.6 grams
1 pint of water = 1.04 pounds
1 gallon of water = 8.34 pounds
1000 micrograms = 1 milligram
1000 milligrams = 1 gram = 0.035 ounce avoirdupois
1000 grams = 1 kilogram = 2.2 pounds

Volume And Liquid Measure:
3 teaspoons = 1 tablespoon = 14.8 cubic centimeters (cc)
2 tablespoons = 1 fluid ounce = 29.6 cc
8 fluid ounces = 16 tablespoons = 1 cup = 236.6 cc = 1/2 pint
2 cups = 32 tablespoons = 1 pint = 473.1 cc = 16 fluid ounces
2 pints = 64 tablespoons = 1 quart = 946.2 cc = 0.946 liter
4 quarts = 256 tablespoons = 1 gallon = 3785 cc
1 gallon = 128 fluid ounces = 231 cubic inches = 3785 cc
1 milliliter (ml) = 1 cubic centimeter = 0.034 fluid ounces
1000 milliliters = 1 liter = approximately 1 quart, 1 fluid ounce
1 liter of water = 1 kilogram
1 bushel soil = 1.25 cubic feet

Land Measure:
43,560 square feet = 1 acre = 0.404 hectare
1 mile = 5280 feet = 1609.35 meters
10 millimeters = 1 centimeter = 0.3937 inches
100 centimeters = 1 meter = 39.37 inches

Length Of Row Required For One Acre:

Row Spacing	*Length or Distance*
24 inch	7260 yards = 21,780 feet
30 inch	5808 yards = 17,424 feet
36 inch	4840 yards = 14,520 feet
40 inch	4356 yards = 13,069 feet
42 inch	4149 yards = 12,446 feet
48 inch	3630 yards = 10,890 feet

Table 1.5 - Abbreviations For Pesticide Formulations

A	=	Aerosol	M	=	Microencapsulated
B	=	Bait	P	=	Pellet
C	=	Concentrate	RTU	=	Ready to Use
D	=	Dust	S	=	Solution
DF	=	Dry Flowable (see WDG)	SP	=	Soluble Powder
E or EC	=	Emulsifiable Concentrate	ULV	=	Ultra Low Volume
F	=	Flowable	W or WP	=	Wettable Powder
G	=	Granule	WDG	=	Water Dispersible Granule (see DF)
H/A	=	Harvest Aid	WS	=	Water Soluble
IE	=	Invert Emulsion	WSP	=	Water Soluble Packet
LC	=	Liquid Concentrate			

Calibration Tables And Information

Table 1.6 - Travel Speed Chart

Time Required in Seconds to Travel			
Miles per Hour	**100 ft**	**200 ft**	**300 ft**
1	68	136	205
2	34	68	102
3	23	46	68
4	17	34	51
5	14	27	41
6	11	23	34
7	10	20	29
8	9	17	26
9	8	15	23
10	7	14	21

1 mph = 88 feet per minute
1 mph = 1.466 feet per second
Speed in mph = Number of 35-inch steps per minute/30

Table 1.7 - Equivalent Quantities of Liquid Materials (Emulsifiable Concentrates, Etc.) for Various Quantities of Water

Water	Quantity of Material					
100.0 gal[1]	0.5 pt	1.0 pt	2.0 pt	3.0 pt	4.0 pt[1]	5.0 pt
50.0 gal	4.0 fl oz	8.0 fl oz	1.0 pt	24.0 fl oz	1.0 qt	2.5 pt
5.0 gal	0.4 fl oz (1.0 tbsp)[2]	0.8 fl oz	1.6 fl oz	2.4 fl oz	3.2.0 fl oz	4.0 fl oz
1.0 gal[1]	0.08 fl oz (0.5 tsp)[2]	0.16 fl oz (1.0 tsp)[2]	0.32 fl oz (2.0 tsp)[2]	0.48 fl oz (3.0 tsp)[2]	0.64 fl oz[1]	0.8 fl oz (5.0 tsp)[2]

[1]Example: If 4 pints of a liquid concentrate is recommended to 100 gallons of water, 4 teaspoonsful of the chemical to 1 gallon of water will give a mixture of approximately the same strength.

[2]Approximate figure.

Table 1.8 - Pounds of Active Ingredients per Gallon, Pounds per Pint of Liquid, and the Number of Pints for Various per Acre Rates

Pounds of Active ingredients in one gallon of commercial product	Pounds of active ingredients per pint[1]	Pints of commercial product needed each acre to give the following pounds of active ingredient					
		0.25 lb/A	0.50 lb/A	0.75 lb/A	1.0 lb/A	1.50 lb/A	2.0 lb/A
2.00	0.25	1.00	2.00	3.00	4.00	6.00	8.00
2.64	0.33	0.75	1.50	2.25	3.00	4.50	6.00
3.00	0.375	0.67	1.33	2.00	2.67	4.00	5.33
3.34	0.42	0.60	1.20	1.80	2.40	3.60	4.80
4.00	0.50	0.50	1.00	1.50	2.00	3.00	4.00
6.00	0.75	0.33	0.67	1.00	1.33	2.00	2.67

[1]1 pint = 16 liquid ounces.

Table 1.9 - Available Commercial Materials in Pounds Active Ingredients per Gallon Necessary to Make Various Percentage Concentrate Solutions

Pounds of active ingredients in one gallon of commercial product	Pounds of active ingredients per pint[1]	Liquid ounces of commercial product per one gallon of solution to make:				
		1/2%	1%	2%	5%	10%
2.00	0.25	2.68	5.36	10.72	26.80	53.60
2.64	0.33	2.02	4.05	8.10	20.25	40.44
3.00	0.375	1.78	3.56	7.12	17.80	35.58
3.34	0.42	1.59	3.18	6.36	15.90	31.96
4.00	0.50	1.34	2.67	5.33	13.34	26.69
6.00	0.75	0.89	1.78	3.56	8.90	17.79

[1]Based on 8.34 pounds per gallon (weight of water).

Table 1.10 - Converting Pounds Active Ingredients per Acre to Smaller Units for Small Plots

Liquid

Cubic centimeters (ml) per 100 square feet necessary to apply the following pounds of active ingredients per acre

	Concentrate lbs/A															
lbs/gal	**1/8**	**1/4**	**1/2**	**3/4**	**1**	**2**	**3**	**4**	**5**	**6**	**7**	**8**	**9**	**10**	**11**	**12**
8.00	0.14	0.27	0.54	0.81	1.08	2.16	3.24	4.32	5.40	6.48	7.56	8.64	9.72	10.80	11.88	12.96
7.00	0.16	0.31	0.62	0.93	1.24	2.48	3.72	4.96	6.20	7.44	8.68	9.92	11.16	12.40	13.64	14.88
6.66	0.16	0.33	0.65	0.99	1.30	2.60	3.91	5.21	6.51	7.80	9.10	10.40	11.70	13.03	14.30	15.60
6.00	0.18	0.36	0.72	1.10	1.45	2.89	4.34	5.78	7.23	8.70	10.15	11.60	13.05	14.46	15.95	17.40
5.00	0.22	0.44	0.87	1.31	1.74	3.47	5.21	6.94	8.68	10.44	12.18	13.92	15.66	17.35	19.14	20.88
4.00	0.27	0.54	1.09	1.64	2.17	4.34	6.51	8.68	10.85	13.02	15.19	17.36	19.53	21.69	23.87	26.04
3.33	0.33	0.65	1.31	1.97	2.61	5.21	7.82	10.42	13.03	15.66	18.27	20.88	23.49	26.06	28.71	31.32
3.00	0.36	0.72	1.45	2.16	2.89	5.78	8.67	11.56	14.45	17.34	20.23	23.12	26.01	28.90	31.79	34.68
2.50	0.43	0.87	1.74	2.61	3.47	6.94	10.41	13.88	17.36	20.82	24.29	27.76	31.12	34.71	38.17	41.64
2.00	0.54	1.09	2.17	3.25	4.34	8.68	13.01	17.35	21.69	26.04	30.38	34.72	39.06	43.38	47.74	52.08
1.00	1.08	2.17	4.34	6.51	8.68	17.35	26.03	34.71	43.39	52.08	60.76	69.44	78.12	86.76	95.48	104.16

Dry

Grams per 100 square feet necessary to apply the following pounds of active ingredient per acre

% Active ingredients	lbs										
	1/2	**3/4**	**1**	**2**	**3**	**4**	**5**	**7.5**	**10**	**20**	**50**
100.0	0.52	0.78	1.04	2.08	3.12	4.15	5.19	7.79	10.39	20.77	51.94
90.0	0.58	0.87	1.15	2.31	3.46	4.62	5.77	8.66	11.54	23.08	57.71
80.0	0.65	0.97	1.30	2.60	3.90	5.19	6.49	9.74	12.98	25.97	64.92
75.0	0.69	1.04	1.38	2.77	4.15	5.54	6.92	10.39	13.85	27.70	69.25
50.0	1.04	1.56	2.08	4.15	6.23	8.31	10.39	15.58	20.77	41.55	103.87
25.0	2.08	3.12	4.15	8.31	12.46	16.62	20.77	31.16	41.55	83.10	207.75
22.5	2.31	3.46	4.62	9.23	13.85	18.46	23.08	34.62	46.17	92.33	230.83
20.0	2.60	3.90	5.19	10.39	15.58	20.77	25.97	36.37	51.94	103.87	259.69
18.5	2.81	4.21	5.61	11.23	16.84	22.46	28.07	42.11	56.15	112.30	280.74
12.5	4.15	6.23	8.31	16.62	24.93	33.24	41.55	62.32	83.10	166.20	415.50
10.0	5.19	7.79	10.39	20.77	31.16	41.55	51.94	77.91	103.87	207.75	519.37
7.5	6.92	10.39	13.85	27.70	41.55	55.40	69.25	103.87	138.50	277.00	692.50
5.0	10.39	15.58	20.77	41.55	62.32	83.10	103.87	155.81	207.75	415.50	1038.74
4.0	12.98	19.48	25.97	51.94	77.91	103.87	129.84	194.76	259.69	519.37	1298.43
2.0	25.97	38.95	51.94	103.87	155.81	207.75	259.69	389.53	519.37	1038.74	2596.86
1.0	51.94	77.91	103.87	207.75	311.62	415.50	519.37	779.06	1038.74	2077.49	5193.72

Table 1.11 - Determination of Product Rate per Acre from Active Ingredient Rate

(Liquid Formulations)

Active Ingredient per gallon					
Active Rate lb/A	**1.5 lb**	**2.0 lb**	**3.0 lb pt/A**	**4.0 lb**	**6.0 lb**
0.25	1.33	1.0	0.83	0.5	0.33
0.5	2.67	2.0	1.33	1.0	0.67
1.0	5.33	4.0	2.67	2.0	1.33
2.0	10.67	8.0	5.33	4.0	2.67
3.0	16.00	12.0	8.00	6.0	4.00
4.0	21.33	16.0	10.67	8.0	5.50
5.0	27.00	20.0	13.33	10.0	6.67

Table 1.12 - Determination of Product Rate per Acre from Active Ingredient Rate

(Dry Formulations)

Percentage of Active Ingredient in Product										
Active Rate lb/A	**5**	**10**	**20**	**25**	**50**	**65**	**70**	**75**	**80**	**90**
					lb/A					
0.25	5.0	2.5	1.2	1.0	0.5	0.37	0.36	0.32	0.3	0.28
0.5	10.0	5.0	2.5	2.0	1.0	0.75	0.72	0.65	0.6	0.55
1.0	20.0	10.0	5.0	4.0	2.0	1.50	1.40	1.30	1.2	1.10
2.0	40.0	20.0	10.0	8.0	4.0	3.00	2.90	2.60	2.4	2.20
3.0	60.0	30.0	15.0	12.0	6.0	4.50	4.30	3.90	3.6	3.30
4.0	80.0	40.0	20.0	16.0	8.0	6.00	5.80	5.20	4.8	4.40
5.0	100.0	50.0	25.0	20.0	10.0	7.50	7.20	6.50	6.0	5.50

Calibration of Boom Sprayers

Be sure to calibrate your sprayer properly. NEVER exceed the labeled rate. Using too much pesticide is illegal and may injure your crop. Using too little may result in little or no pest control. Pressure, nozzle orifice size, spacing of nozzles, and speed all affect the application rate. Be sure that all of your spray equipment is in good working order and your sprayer is configured properly.

Large-area Method

1. Measure and stake off one acre (43,560 sq ft) in the field to be treated.
2. Fill sprayer tank with water.
3. Maintain constant pressure and speed while spraying the acre. Mark pressure, throttle, and gear settings.
4. Measure the amount of water used. The amount of water necessary to refill the tank is equal to gallons per acre applied.
5. Make up the spray solution with the correct amount of chemical, based on the amount of water applied per acre.
6. Make the application at pressure, throttle, and gear settings used in calibrating.

"Ounce" Method

1. Mark off a test course, based on the chart below.
   (Measure nozzle spacing for booms; row spacing for directed and band rigs.)
2. Fill your tank half full (average weight). Set the throttle for spraying. Get a running start. Drive the test course three times while operating the equipment under field conditions. Record driving times (# of seconds) for each trial.
3. Calculate the average time in seconds required to drive the measured distance.
4. Run the equipment for the average time it took to drive the course, using the same settings (RPMs, pressure). Catch output during that time in a container marked in ounces. (If you are using a boom sprayer, catch the output from one nozzle. If you are using a directed/band rig, catch the spray from all nozzles per row for the prescribed time.)
5. Output in ounces = gallons per acre (GPA) applied.

Table 1.13 - "Ounce" Method Distances

Row Width or Nozzle Spacing (inches)	Distance (feet)	Row Width or Nozzle Spacing (inches)	Distance (feet)
48	85	30	136
46	89	28	146
44	93	24	170
42	97	20	204
40	102	18	227
38	107	15	272
36	113	10	408

This method works because the test course is 1/128th of an acre, and an ounce is 1/128th of a gallon — the proportions are the same.

A word of caution: Be sure to use the right nozzle (and pressure) for the job. Check ALL nozzles (or sets of nozzles, in the case of banding/directed applications) to be sure the pattern and output from each one (or each set) is the same. To check pattern, use a tray designed for this purpose or spray a hard surface and observe how the wetted area dries. Check output with a flow meter, or by catching the output from each for a short time (ex. 10 seconds). Replace any nozzles that do not match the pattern and flow rate of the one(s) you used in the calibration test.

For more information and/or for guidance on calibration methods for other types of equipment, contact your local Extension agent.

Chemical Information Chart

This section contains a chart listing commonly used pesticides (chemical name/trade name), their manufacturers, their actions, and their acute toxicity rating (oral LD_{50}). Pesticides which have been canceled are given only as a reference to their toxicity and should not be used.

This list is for information purposes only and was not meant to endorse or exclude any manufacturers or their products. The names are correct to the best of our knowledge. If mistakes were made, they were unintentional. Please notify the authors if corrections or additions are needed for the next edition.

Names

The common chemical name is the approved name given a pesticide by the American National Standards Committee. An active ingredient may have many trade names, given to a pesticide by the manufacturers/producers.

Action

The specific actions of the pesticides listed are abbreviated as follows:

A	- acaricide	IGR	- insect growth regulator
Anti	- antibiotic	M	- molluscicide
Av	- avicide	Mi	- miticide
B	- bactericide	N	- nematicide
F	- fungicide	PGR	- plant growth regulator
Fum	- fumigant	R	- rodenticide
H	- herbicide	Rep	- repellent
H A	- harvest aid (defoliant)	T	- termiticide
I	- insecticide	V	- vertebrate control

Toxicity

Toxicity is the quality, state, or degree of being poisonous. The toxicities listed here are oral. Oral LD_{50} (mg/kg) is the dosage in milligrams per kilogram of body weight required to kill 50 percent of test animals when given as a single dose by mouth. A milligram/kilogram (mg/kg) is equal to 1 part per million (1 lb in 500 tons). The lower the LD_{50}, the higher the toxicity. Dermal LD_{50} ratings are in most cases higher (lower in toxicity) than oral ratings.

When registering pesticides, the Environmental Protection Agency (EPA) uses acute LD_{50} values to determine the toxicity category, words, and symbols that must be placed on the label. For this purpose the test animals are usually mice, rats, or rabbits. The letters LD stand for lethal dose.

Table 1.14 - Toxicity Categories

Toxicity Category	Signal Words* Required on Label by EPA	Oral LD_{50} (mg/kg)	Probable Lethal Adult Human Dose
I Highly Toxic	DANGER and POISON, plus skull and crossbones symbol	0 to 50	A few drops to 1 teaspoon
II Moderately Toxic	WARNING	50 to 500	1 teaspoon to 2 teaspoons
III Slightly Toxic	CAUTION	500 to 5,000	1 ounce to 1 pint (1 pound)
IV Almost non-toxic	CAUTION	more than 5,000	1 pint (1 pound)

***Please note:** certain products may use signal words which do not correlate with LD_{50} ratings due to some special property of the chemical. For example, chlorothalonil has a very low toxicity (LD_{50} 10,000 mg/kg) yet has DANGER and WARNING signal words on many of its formulations, due to a possibility of an extreme allergic reaction in some people. Also, toxicity (LD_{50}) is relative to the concentration of active ingredient in question and the body weight of the victim.

All LD_{50} ratings listed here are for technical grade compounds; however, pesticide products are not sold as 100 percent concentrations. To find the LD_{50} for a specific pesticide product – which takes into account the toxicity of the active ingredients, its concentration, and all other components in the formulation – consult the MSDS. Remember that, if misused, any pesticide can be highly toxic to humans, domestic animals, and wildlife.

Restricted-Use Pesticides ([1])

Those active ingredients having some or all products designated as **restricted use** are marked with a **superscript one** ([1]) in Table 1.15. Products that are restricted usually have a higher toxicity, concentration, or other property which makes them more hazardous than products which are designated for general use. Refer to the product label as a guide. Applicators must be certified to use or purchase restricted-use pesticides. Contact your local Extension agent for information on how to become a certified applicator.

Table 1.15 - Chemical Information Chart

Common Name or Designation ([1]=restricted use)	Trade Names Other Names	Action	Company	Acute LD_{50} Values for White Rats-Oral (mg/kg) Technical
abamectin[1]	Agri-Mek, Avid, various	I/Mi	Syngenta, various	300
acephate	Orthene, various	I	Amvac, BASF, various	866-945
acetamiprid	Assail, Tristar	I	United Phosphorus, Cleary	314-417
acetic acid	vinegar	H	various	331
acetochlor	Breakfree, Confidence, Degree, Harness, Surpass	H	Dow AgroSciences, DuPont, Monsanto	2,953
acifluorfen	Blazer, Storm	H	United Phosphorus	2,025
Agrobacterium radiobacter	Galltrol-A	B	AgBioChem	low toxicity
alachlor[1]	Bullet, Intrro, Lariat, Micro-Tech	H	Monsanto	~1,000
aldicarb[1]	Meymik, Temik	I	Ag Logic, Bayer	1
allethrin	various	I	various	680-1,000
allyl isothiocyanate	Dominus	Rep	Engage Agro USA	151
aluminum phosphide[1]	Phosfume, Phostoxin, Weevil-Cide	Fum	Degesch, Douglas, United Phosphorus	0.3
ametryn	Evik	H	Syngenta	1,110
ametoctradin	Orvego, Zampro	F	Bayer	> 2,000
amicarbazone	Xonerate	H	Arysta	> 2,000
aminocyclopyrachlor	Method	H	Bayer	> 5,000
4-aminopyridine[1]	Avitrol	Av	Avitrol Corp	20-29
aminopyralid	Milestone	H	Dow AgroSciences	> 5,000
amitraz[1]	Apivar	H	Arysta	800
ancymidol	A-Rest, Abide	PGR	Fine Americas, Sepro	4,500
asulam	Asulox	H	United Phosphorus	5,000
atrazine[1]	Aatrex	H	Syngenta, various	3,080
avitrol[1]	Avitrol	AV	Avitrol Corp.	20
azadirachtin	Amazin, Aza-Direct, Azatin, Azatrol, Ecozin, Ornazin	IGR, I, F, Rep	Amvac, Certis, Gowan, Olympic, PBI Gordon, Sepro	> 5,000
azoxystrobin	Abound, Dynasty, Headway, Heritage, Quadris	F	Syngenta, various	> 5,000
Bacillus cereus	Pix Plus	PGR	Arysta	> 5,000
Bacillus firmus	Nortica, Vovito	N	Bayer	> 5,000
Bacillus licheniformis	Roots Ecoguard	F	Novozymes	> 5,000
Bacillus pumilus	Ballad Plus, Sonata, Yield-Shield	F	Bayer	> 5,000

Table 1.15 - Chemical Information Chart (cont.)

Common Name or Designation ([1]=restricted use)	Trade Names Other Names	Action	Company	Acute LD_{50} Values for White Rats-Oral (mg/kg) Technical
Bacillus sphaericus	Fourstar, Vectolex, Vectomax, Spheratax	I	Advanced Microbiologics, Fourstar, Valent	> 5,000
Bacillus subtilis	Companion, Serenade, Rhapsody	F	AgraQuest, Growth Products	> 5,000
Bacillus thuringiensis	DiPel, various	I	various	> 5,000
Beauveria bassiana	balEnce, Botaniguard, Mycotrol, Naturalis	I	Jabb, LAM, Troy Biosciences	> 5,000
benefin (benfluralin)	Balan, Team	H	Dow AgroSciences, various	> 10,000
bensulide	Prefar	H	Gowan, various	770
bentazon	Basagran, Rezult	H	Arysta, BASF, various	1,100
bifenazate	Acramite, Floramite, Sirocco	Mi	Chemtura, OHP	> 5,000
bifenthrin[1]	Talstar, various	I	FMC, various	54.5
bispyribac-sodium	Tradewind, Velocity	H	Valent	4,111
BLAD	Fracture	F	FMC	> 5,000
borax	various	I	various	4,500-6,000
Bordeaux Mixture	Copper/Sulfur	F	various	low toxicity
boric acid	various	I	various	low toxicity
boscalid	Emerald	F	BASF	> 2,000
brodifacoum	Final, Talon, various	R	Bell Labs, Syngenta, various	0.27
bromacil	Hyvar, various	H	Bayer, various	5,200
bromadiolone	Contrac, various	R	Bell Labs, various	0.56-0.84
bromethalin	Assault, Fastrac, various	R	Bell Labs, various	2.0
bromoxynil	Buctril, various	H	Bayer	190
buprofezin	Applaud, Talus, various	IGR	Nichino, Sepro	180-400
butralin	Butralin	H, PGR	Chemtura	890-1,540
capsaicin	Hot Sauce, various	Rep	various	> 2,500
captan	Captan, various	F	various	9,000
carbaryl	Sevin, various	I/Mi	various	850
carbendazim	Fungisol, Imisol	F	J.J. Mauget	> 15,000
carbofuorfen	Acifluorfen 2, Avalanche, Levity	H	various	> 5,000
carboxin	Vitavax	F	various	3,820
carfentrazone-ethyl	Aim, various	H	FMC, various	> 5,000
chlorantraniliprole	various	I	DuPont, Syngenta, various	> 5,000
chlorethoxyfos[1]	SmartChoice	I/Mi	Amvac	1.8-4.8
chlorfenapyr	Phantom, Pylon	I/Mi	BASF	441
chlorimuron ethyl	Cemax, Classic	H	Agsurf, DuPont	4,102
chlormequat chloride	Citadel, Cycocel, Chlormequat	PGR	various	> 5,000
chlorophacinone[1]	Rozol	R	Liphatech	3.15
chloropicrin[1]	Tri-Pic	Fum	Triest	250
chlorothalonil	Bravo, Chloronil, various	F	Syngenta, various	> 10,000
chlorpropham	Shield, various	H, PGR	Aceto Ag, Decco	3,800

Table 1.15 - Chemical Information Chart (cont.)

Common Name or Designation ([1]=restricted use)	Trade Names Other Names	Action	Company	Acute LD_{50} Values for White Rats- Oral (mg/kg) Technical
chlorpyrifos[1]	Dursban, Lorsban	I	Dow AgroSciences, various	135-163
chlorsulfuron	Telar	H	Bayer	5,545
chlorthal	Dacthal	H	Amvac	3,000
cholecalciferol	Agrid 3, Terad 3	R	Bell	352
clethodim	Envoy, Select, Volunteer	H	Valent, various	1,630
clofentezine	Apollo, Ovation	Mi	Makhteshim-Agan, Everris	> 5,200
clomazone	Command	H	FMC	2,077
clopyralid	Lontrel	H	Dow AgroSciences	> 4,300
cloransulam-methyl	FirstRate	H	Dow AgroSciences	> 5,000
clothianidin	Arena, Belay, Poncho	I	BASF, Valent	> 5,000
copper chelate	Cutrine, various	H(aq)	Applied Biochemists	0.50-2.00
copper hydroxide	Kocide, various	F/B	DuPont, Sepro, various	1,000
copper sulfate	Bluestone, various	H(aq), F/B	various	470
coumaphos[1]	Checkmite +, Co-Ral	I/A	Bayer, Mann Lake	56-230
m-cresol	Gallex	B	Agbiochem	242
creosote[1]	coal tar	F/I	various	885
cyantraniliprole	Exirel, Ference, Fortenza, Mainspring, Verimark, Zyrox	I	DuPont, Syngenta	> 5,000
cyazofamid	Ranman, Segway	F	various	> 5,000
cyclanilide	Finish, Stance, Terminate	PGR	Bayer, NuFarm	> 5,000
cycloate	Ro-Neet	H	HelmAgro	2,000-3,190
cyflufenamid	Torino	F	Gowan	> 5,000
cyflumetofen	Nealta, Sultan	Mi	BASF	> 2,000
cyfluthrin[1]	Tempo, Tombstone, various	I	Bayer, Loveland, various	400
(gamma-) cyhalothrin[1]	Declare, Proaxis	I	Cheminova	50
(lambda-) cyhalothrin[1]	Demand, Karate, Warrior, various	I	Syngenta, various	79
cymoxanil	Curzate, Tanos	F	DuPont	1,100
cypermethrin[1]	Ammo, Demon, Fastac	I	various	250-4,150
cyproconazole	Alto	F	Syngenta	1,020
cyprodinil	Vangard	F	Syngenta	> 2,000
cyromazine	Citation, Trigard	IGR	Syngenta	3,387
2,4-D	various	H/PGR	various	300-700
2,4-DB	various	H	various	370-1,500
DCPA	see chlorthal	—	—	—
daminozide	B-Nine, Dazide	PGR	various	8,400
dazomet	Basamid, various	Fum	various	520
decanol	Royaltac, various	PGR	various	18,000
deet	OFF, various	Rep	SC Johnson, various	8,500

Table 1.15 - Chemical Information Chart (cont.)

Common Name or Designation ([1]=restricted use)	Trade Names Other Names	Action	Company	Acute LD_{50} Values for White Rats- Oral (mg/kg) Technical
deltamethrin	Deltadust, Deltagard, various	I/Mi	Bayer, various	> 5,000
diazinon[1]	Diazion	I	various	1,250
dicamba	Banvel, Engenia, Vanquish, various	H	BASF, Syngenta, various	1,707-6,764
dichlobenil	Casoron	H	various	> 3,160
1,3-dichloropropene[1]	Telone	Fum	Dow AgroSciences	250-500
dichlorvos	Vapona, various	I	various	56-80
diclofop-methyl[1]	Hoelon, Illoxan	H	Bayer	563
diclosulam	Strongarm	H	DowAgroSciences	> 5,000
dicrotophos[1]	Bidrin, Inject A Cide	I	Amvac, Mauget	22
difenacoum	various	R	various	<1
difenoconazole	Dividend, Inspire	F	Syngenta	1,453
difethialone	Generation, Hombre, various	R	Liphatech	1-7
diflubenzuron[1]	Advance, Dimilin	IGR, T	BASF, Chemtura	> 4,640
diflufenzopyr-sodium	no stand-alone products	H	BASF	> 5,000
dikegulac sodium	Augeo, Atrimmec, Pinscher	PGR	various	18,000-31,000
dimethoate	Dimethoate	I	various	290-325
dimethomorph	Forum, Stature	F	BASF	3,900
dinotefuran	Venom	I	Valent	2,804
diphacinone	various	R	various	3
diquat dibromide	Diquat, Enforcer, Reward, Weedtrine-D	H	various	231
disulfoton[1]	Di-Syston	I	Bayer	12.7
dithiopyr	Dimension, various	H	Dow AgroSciences, various	3,600
diuron	Karmex	H	various	3,400
dried blood	various	Rep	various	low toxicity
egg solids	various	Rep	various	34,600
emamectin[1]	Enfold, Proclaim	I	Syngenta	76-89
endosulfan	Thionex	I	Makhteshim Agan	40
endothall	Aquathol, Hydrothal	H/H(aq)	United Phosphorus	51
EPTC	Eptam	H	Gowan	1,630
esfenvalerate[1]	Asana, various	I	Valent, various	75-458
ethaboxam	Intego	F	Valent	> 5,000
ethalfluralin	Curbit, Sonalan, Strategy	H	Dow AgroSciences, Loveland	> 10,000
ethephon	Cerone, Ethrel, Florel	PGR	Bayer, various	4,000
ethofenprox	Zenivex	I	Wellmark	> 40,000
ethofumesate	Ethotron, Poa Constrictor, Prograss	H	Bayer, United Phosphorus	6,400
ethoprop (ethoprophos)[1]	Mocap	I/N	Amvac	62

Table 1.15 - Chemical Information Chart (cont.)

Common Name or Designation ([1]=restricted use)	Trade Names Other Names	Action	Company	Acute LD_{50} Values for White Rats-Oral (mg/kg) Technical
etoxazole	Beethoven, Tetrasan, Zeal	Mi, IGR, Mi	BASF, Valent	> 5,000
etridiazole	Banrot, Terrazole, Truban	F	various	1,077
famoxadone	Tanos	F	DuPont	> 5,000
fatty acid salts/soaps	various	I/Mi, H, PGR, Rep	various	50 - > 5,000
fenamidone	Fenstop, Reason	F	Bayer, OHP	> 5,000
fenazaquin	Magister, Magus	Mi	Gowan	134
fenbuconazole	Indar	F	Dow AgroSciences	> 2,000
fenbutatin-oxide (hexakis)[1]	Meraz, Vendex	Mi	United Phosphorus	2,630
fenhexamid	Captevate, Decree, Elevate	F	Arysta, Sepro	> 2,000
fenoxaprop-p-ethyl	Acclaim, Double Check, Tacoma	H	Bayer, Loveland, Winfield	4,670
fenpropathrin[1]	Danitol, Tame	A/I	Valent	70
fenpyrazamine	Protexio	F	Valent	> 2,000
fenpyroximate	Akari, Portal	I/Mi	Nichino, Sepro	480
fentin hydroxide[1]	Agri-Tin, Super Tin	F/I/Mi	NuFarm, United Phosphorus	160
ferbam	Ferbam	F	Taminco	> 17,000
ferric sodium EDTA	Slug and Snail Killer	M	various	low toxicity
fipronil[1]	Frontline, Regent, Termidor	I/Mi/T	Bayer, BASF	336
flazasulfuron	Katana	H	PBI Gordon	> 5,000
flonicamid	Aria, Beleaf	I	FMC	> 2,000
florasulam	Defendor	H	Dow AgroSciences	> 5,000
fluazifop-P-butyl	Fusilade	H	Syngenta, various	3,680
fluazinam	Omega, Secure	F	Syngenta	> 5,000
flubendiamide	Belt, Synapse, Tourismo, Vetica	I	Bayer, Nichino	> 2,000
flucarbazone-sodium	Finesse, Everest, Sierra	H	Arysta, DuPont, Syngenta	> 5,000
fludioxonil	Maxim, Medallion	F	Syngenta	> 5,000
fluensulfone	Nimitz	N	Makhteshim Agan	> 2,000
flufenacet	Axiom, Define	H	Bayer	589-1,617
flumetralin	Prime +, various	PGR	Syngenta, various	> 5,000
flumetsulam	Python	H	Dow AgroSciences	> 5,000
flumiclorac-pentyl	Action, Resource	H	Amvac, Valent	> 5,000
flumioxazin	Broadstar, Clipper, Gangster, Payload, SureGuard, Valor	H/H(aq)	Valent	> 5,000
fluometuron	Cotoran, Shotaran	H	various	6,416-8,900
fluopicolide	Adorn, Presidio, Stellar	F	Valent	> 5,000
fluopyram	Ilevo	F/N	Bayer	> 2,000
fluoxastrobin	Aftershock, Disarm, Evito	F	Arysta, Loveland	> 5,000

Table 1.15 - Chemical Information Chart (cont.)

Common Name or Designation ([1]=restricted use)	Trade Names Other Names	Action	Company	Acute LD_{50} Values for White Rats-Oral (mg/kg) Technical
flupyradifurone	Sivanto	I	Bayer	> 2,000
fluridone	Avast, Sonar	H (aq)	Alligare, Sepro	> 10,000
fluroxypyr	Position, Starane, Vista	H	Dow AgroSciences	> 2,405
flurprimidol	Cutless, Topflor	PGR	Sepro	709-914
fluthiacet-methyl	Cadet	H	FMC	> 5,000
flutolanil	Moncoat, Prostar	F	Bayer, Nichino	> 10,000
flutriafol	Fortix	F	Arysta	1,140
fluvalinate	Apistan, Mavrik	I	Wellmark	260-280
fluxopyroxad	Systiva, Xzemplar	F	BASF	> 2,000
folpet	Fungitrol	F	International Specialty Products	> 10,000
fomesafen	Sinister	H	Helena	1,250-2,000
formic acid	Mite-Away	Mi	Nod Apiary Products	110
fosamine ammonium	Krenite	H	Bayer	10,200
fosetyl-Al	Aliette, various	F	Bayer, various	5,800
furfural	Multiguard Protect	F/N	Agriguard	65
gibberellic acid	GibGro, ProGibb	PGR	various	630
Gliocladium virens	Soil Gard	F	Certis	low toxicity
glufosinate-ammonium	Finale, Ignite, Liberty, Rely, Remove, various	H	Bayer, various	1,620-2,000
glyphosate	Accord, Rodeo, Roundup, various	H	Dow AgroSciences, Monsanto, various	4,050-5,600
halosulfuron-methyl	Sandea, Sedgehammer, various	H	Monsanto, Nufarm, various	1,287
harpin protein	Axiom, various	B, I, F, N, PGR	various	low toxicity
hexaflumuron	Shatter	T, IGR	Dow AgroSciences	> 5,000
hexazinone	Velossa, Velpar	H	DuPont, Helena	1,690
hexythiazox	Hexygon, Onager, Savey	Mi	Gowan	> 5,000
hydramethylnon	Amdro	I	various	1,131-1,300
hydroprene	Gentrol, various	IGR	various	> 34,600
IBA	Hormodin, various	PGR	various	100 (mice)
imazalil	Fungaflor	F	Whitmire	227-343
imazamox	Beyond, Clearcast, Raptor	H/ H(aq)	BASF, Sepro	> 5,000
imazapic	Cadre, Plateau	H	BASF, NuFarm	> 5,000
imazapyr	Arsenal, Chopper, Habitat, various	H	BASF, Sepro, SSI Maxim	> 5,000
imazaquin	Image	H	BASF	> 5,000
imazethapyr	Pursuit	H	BASF	> 5,000
imazosulfuron	Celero, League	H	Valent	> 5,000
imidacloprid	Admire, Advantage, Merit, various	I/A	Bayer, various	450
imiprothrin	see metaflumizone	---	---	---

Table 1.15 - Chemical Information Chart (cont.)

Common Name or Designation ([1]=restricted use)	Trade Names Other Names	Action	Company	Acute LD_{50} Values for White Rats-Oral (mg/kg) Technical
indaziflam	Alion, Esplanade, Marengo, Specticle	H	Bayer, OHP	> 2,000
indoxacarb	Advion, Avaunt, Steward	I	DuPont	268-1,732
iodosulfuron	Autumn	H	Bayer	2,678
ipconazole	Acceleron, Rancona, Vortex	F	Bayer, Chemtura, Monsanto	> 5,000
iprodione	Eclipse, Rovral, various	F	FMC, Sipcam Agro, various	3,500
isoxaben	Gallery	H	Dow AgroSciences	> 10,000
isoxaflutole	Balance	H	Bayer	> 5,000
kasugamycin	Kasumin	F	Arysta	> 5,000
kinoprene	Enstar	IGR	Wellmark	4,900-5,000
kresoxim-methyl	Sovran	F	BASF	> 5,000
lactofen	Cobra, Phoenix	H	Valent	> 5,000
linuron	Linex, Lorox	H	Tessenderlo Kerley	1,500-4,000
magnesium phosphide[1]	Fumi-Cel, Fumi-Strip, Magtoxin	Fum	Degesch	0.3
malathion	Malathion, various	I	various	1,375-2,800
maleic hydrazide	MH-30, various	H/PGR	various	6,950
mancozeb	Dithane, Fore, Manzate, various	F	various	> 5,000
MCPA	MCPA, various	H	various	700-800
mecoprop	MecoMec, various	H	PBI/Gordon, various	930
mefenoxam	see metalaxyl-M	—	—	—
mefluidide	Embark	H/PGR	PBI/Gordon, various	> 4,000
mepiquat chloride	various	PGR	various	464
mepiquat pentaborate	Pentia	HA/ PGR	BASF	500
mesotrione	Callisto, Tenacity	H	DuPont, Syngenta	> 5,000
metaflumizone	Altrevin, Siesta	I	BASF	1,800
metalaxyl-M (mefenoxam)	Apron, Subdue	F	various	1,040
metaldehyde	Deadline, various	M	various	630
metam-sodium[1]	Vapam, various	Fum	Amvac, various	1,800
metconazole	Caramba, Metlock, Quash, Tourney	F	BASF, Valent	660
methamidophos[1]	Monitor	I	Bayer	17
methiocarb[1]	Mesurol	I/M/Rep	Gowan	15-35
methomyl[1]	Lannate, Nudrin, various	I/N	DuPont, various	17-24
methoprene	Altosid, various	IGR	Wellmark Intl., various	34,600
methoxyfenozide	Intrepid, Troubadour	I	Dow AgroSciences, Helena	> 5,000
methyl anthranilate	various	Rep	various	> 5,000
methyl bromide[1]	Bromo-O-Gas, Metabrom, Meth-O-Gas	Fum	Great Lakes, various	200 (vapor)
metiram	Polyram	F	Loveland	> 10,000

Table 1.15 - Chemical Information Chart (cont.)

Common Name or Designation ([1]=restricted use)	Trade Names Other Names	Action	Company	Acute LD_{50} Values for White Rats-Oral (mg/kg) Technical
metolachlor	Cinch, Dual, Pennant , various	H	DuPont, Syngenta, various	2,780
metrafenone	Vivando	F	BASF	> 5,000
metribuzin	Metribuzin, Sencor, Tricor	H	Bayer, various	1,100-2,300
metsulfuron-methyl	Ally, Cimarron, Escort, various	H	Bayer, DuPont, various	> 5,000
mineral oil	Dormant Oil, various	I/Mi	various	low toxicity
MSMA	MSMA, Target	H	Drexel, Luxembourg	1,700
myclobutanil	Eagle, Laredo, various	F	Dow AgroSciences, various	1,600-2,290
NAA	Dip'nGrow, Pomaxa, RootMaster	PGR	Valent, various	1,000
NAD	Amid-Thin, Rootone	PGR	Amvac, Bayer	1,000
naled	Dibrom, Trumpet	I	Amvac	430
naphthalene	"moth balls"	Fum/I /Rep	various	50-500
napropamide	Devrinol	H	United Phosphorus	5,000
neem	see azadirachtin	—	—	—
nicarbazin	Ovocontrol	Av	Innolytics, LLC	10,000
nicosulfuron	Accent	H	DuPont	> 5,000
norflurazon	Solicam	H	Tessenderlo Kerley	> 9,400
Nosema locustae	Nolo Bait	I, M & R	M&R Durango	low toxicity
novaluron	Diamond, Pedestal, Rimon	I	Chemtura, Makhteshim Agan	> 5,000
noviflumuron	Recruit	T, IGR	Dow AgroSciences	> 5,000
oryzalin	Surflan, various	H	United Phosphorus, various	> 10,000
oxadiazon	Ronstar, various	H	Bayer, various	> 8,000
oxamyl[1]	Vydate	I/N	DuPont	5.4
oxydemeton-methyl[1]	MSR	I, Mi	Gowan	65-75
oxyfluorfen	Goal, various	H	Dow AgroSciences, various	> 5,000
oxytetracycline	Mycoject, Mycoshield, Treetech	F	various	low toxicity
paclobutrazol	Bonzi, Cambistat, Piccolo, Profile, Trimmit	PGR	various	5,346
paradichlorobenzene	"moth balls"	I/Rep	various	500-5,000
paraquat[1]	Gramoxone, various	H	Syngenta, various	150
pendimethalin	Pendulum, Prowl, various	H	BASF, Scott's, various	1,250
penoxsulam	Galleon, Sapphire	H/H(aq)	Dow AgroSciences, Sepro	> 5,000
pentachloronitrobenzene	Blocker, Terraclor, Turfcide	F	Amvac	1,650-12,000
penthiopyrad	Fontelis, Velista, Vertisan	F	DuPont	> 5,000
permethrin[1]	Ambush, Pounce, various	I	Amvac, FMC, various	4,000
phenmedipham	Spin Aid	H	Bayer	> 4,000
phenothrin	Bedlam, various	I	MGK, various	> 5,000
phorate[1]	Thimet	I	Amvac	2-4
phosmet	Imidan	I	Gowan	147-316

Table 1.15 - Chemical Information Chart (cont.)

Common Name or Designation ([1]=restricted use)	Trade Names Other Names	Action	Company	Acute LD_{50} Values for White Rats-Oral (mg/kg) Technical
phosphine gas[1] (hydrogen phosphide)	Eco_2Fume, VAPORPH_3OS	I/Mi, Fum	Cytec Ind.	0.3
phostebupirim[1]	Aztec[1] (w/cyfluthrin)	I	Bayer	2.9-3.6
picaridin	Cutter, Off, various	Rep	S.C. Johnson, various	4,743
picloram[1]	Tordon K, various	H	Dow AgroSciences, various	8,200
picoxystrobin	Approach	F	DuPont	> 5,000
pinoxaden	Axial	H	Syngenta	> 5,000
piperalin	Pipron	F	Sepro	2,500
piperonyl butoxide	(used as a synergist)	I	various	> 7,500
polybutene	Hot Foot, various	Rep	various	low toxicity
polyoxin D	Affirm, Endorse, Ph-D, Veranda	F	Arysta	> 5,000
potassium bicarbonate	Armicarb, Kaligreen, Milstop	F	various	500-5,000
primisulfuron-methyl	Beacon	H	Syngenta	5,050
prodiamine	Barricade, various	H	Syngenta, various	> 5,000
prohexadione calcium	Anuew, Apogee, Kudos	PGR	BASF, Cleary, Fine	> 5,000
prometon	Pramitol, various	H	various	2,980
prometryn	Caparol, CottonPro	H	Syngenta, Makhteshim Agan	5,235
pronamide[1] (propyzamide)[1]	Kerb	H	Dow AgroSciences	5,620-8,350
propamocarb hydrochloride	Banol, Previcur, Proplant	F	Bayer, Lesco, Sipcam	8,600
propargite	Omite	Mi	Chemtura	2,200
propiconazole	Alamo, Banner, Tilt, various	F	Syngenta, various	1,517
propoxur	Invader, various	I/Mi	FMC, various	95-104
propyzamide[1]	see pronamide	—	—	—
prosulfuron	Peak	H	Syngenta	4,360
prothioconazole	Proline	F	Bayer	> 6,200
pymetrozine	Endeavor, Fulfill	I/Mi	Syngenta	5,820
pyraclostrobin	Cabrio, Headline, Insignia	F	BASF	> 5,000
pyraflufen-ethyl	Edict, Venue	H, HA	Nichino	> 5,000
pyrethrum	Pyrethrins	I	various	584-900
pyridaben	Nexter, Sanmite	I/Mi	Gowan	820-1,350
pyridalyl	Overture	I	Valent	> 5,000
pyrimethanil	Scala	F	Bayer	4,149
pyriproxyfen	Distance	IGR	Valent	4,733
pyrithiobac-sodium	Pyrimax, Pysonex, Staple	H	Agsurf, DuPont, Makhteshim Agan	4,000
pyroxasulfone	Zidua	H	BASF	> 2,000
pyroxsulam	GR1, PowerFlex	H	Dow AgroSciences, DuPont	> 2,000
quinclorac	Facet, various	H	BASF, various	> 2,610
quinoxyfen	Quintec	F	Dow AgroSciences	> 5,000

Table 1.15 - Chemical Information Chart (cont.)

Common Name or Designation ([1]=restricted use)	Trade Names Other Names	Action	Company	Acute LD_{50} Values for White Rats-Oral (mg/kg) Technical
quizalofop-p-ethyl	Assure II, Targa	H	DuPont, Gowan	1,182-1,210
resmethrin[1]	Scourge	I	Bayer, various	> 2,500
rimsulfuron	Matrix, various	H	DuPont, various	> 5,000
rotenone[1]	CFT Legumine, Prenfish, Prentox	V	Central Garden & Pet Co.	132-1,500
saflufenacil	Detail, Integrity, Sharpen, Treevix	H	BASF	> 2,000
sethoxydim	Poast, Rezult, various	H	BASF, various	2,676-3,200
siduron	Tupersan, various	H	various	> 7,500
silica/silicon dioxide	various	I	various	3,160
simazine	Princep, various	H	Syngenta, various	> 5,000
sodium bentazon	Basagran, Rezult B, various	H	Arysta, BASF, various	1,100-2,063
sodium chlorate	Defol, various	H	Drexel, various	1,200
sodium chloride	TABLE SALT	---	Morton, various	3,320
sodium cyanide[1]	M-44	V	USDA-APHIS-WS	6.4
sodium fluoroacetate[1]	1080	V	USDA-APHIS-WS	0.22
spinetoram	Delegate, Radiant	I	Dow AgroSciences	> 5,000
spinosad	SpinTor, Tracer, various	I/Mi	Dow AgroSciences, various	> 5,000
spiromesafen	Forbid, Judo, Oberon	I/Mi	Bayer, OHP	> 2,500
spirotetramat	Kontos, Movento	I	Bayer, OHP	> 2,000
starlicide[1]	Compound DRC-1339, Starlicide Complete	Av	USDA-APHIS-WS, VIrbac AH	1,770
streptomycin sulfate	Agri-Mycin, various	F	various	> 10,000
sulfentrazone	Authority, Spartan, various	H	FMC, various	2,855
sulfometuron-methyl	Oust, various	H	Bayer, various	> 5,000
sulfosulfuron	Certainty, Outrider	H	Monsanto	> 5,000
sulfoxaflor	Closer, Transform	I	Dow AgroSciences	1,000
sulfur	Thiolux, various	F, I/Mi	various	low toxicity
sulfuryl fluoride[1]	Profume, Vikane, Zythor	Fum	Dow AgroSciences, Ensystex II	100
tebuconazole	various	F	various	4,000
tebufenozide	Confirm, Mimic	I	Gowan, Valent	> 5,000
tebupirionfos[1]	see phostebupirim[1]	—	—	—
tebuthiuron	Spike, various	H	Dow AgroSciences, various	579
tefluthrin[1]	Force, Precept	I/Mi	Monsanto, Syngenta	20-35
tembotrione	Laudis	H	Bayer	> 2,000
temephos	Abate	I	Clarke	8,600-13,000
terbacil	Sinbar	H	Tessenderlo Kerley	> 5,000
terbufos[1]	Counter	I	Amvac	1.6
tetrachlorvinphos	Rabon	I/Mi	Bayer, various	4,000-5,000
tetraconazole	Domark, Mazinga	F	Isagro, Sipcam Agro	1,248
tetramethrin	various	I	various	4,640

Table 1.15 - Chemical Information Chart (cont.)

Common Name or Designation ([1]=restricted use)	Trade Names Other Names	Action	Company	Acute LD_{50} Values for White Rats-Oral (mg/kg) Technical
thiabendazole	Mertect	F	Syngenta	3,810
thiacloprid	Calypso	I	Bayer	621
thiamethoxam	Actara, various	I/Mi	Syngenta, various	1,563
thiencarbazone-methyl	no stand-alone products	H	Bayer	> 2,000
thidiazuron	Ginstar, various	HA	Bayer, various	> 5,000
thifensulfuron-methyl	Harmony, various	H	DuPont, various	> 5,000
thiophanate methyl	3336, Spectro, Topsin	F	Cleary, various	7,500
thiram	Spotrete, various	F/Rep	Cleary, various	780
tolclofos-methyl	Rizolex	F	Valent	5,000
tolfenpyrad	Apta, Hachi-Hachi, Torac	I	Nichino, Sepro	260-386
topramezone	Armezon, Frequency, Impact, Pylex	H	Amvac, BASF	> 2,000
triadimefon	Bayleton, various	F	Bayer, various	317-568
triadimenol	Baytan	F	Bayer	700-1,200
tribenuron-methyl	Express	H	DuPont	> 5,000
tribuphos (tribufos)	DFT 6, Folex 6, Vestage	HA	Amvac, Loveland, Red Eagle	250
trichlorfon	Dylox	I	Bayer	560-630
Trichoderma harzianum	Rootshield, Turfshield	F	Bioworks	low toxicity
triclopyr	Garlon, various	H	Dow AgroSciences, various	713
trifloxystrobin	Compass, Flint, Gem	F	Bayer, OHP	> 4,000
trifloxysulfuron-sodium	Envoke, Monument	H	Syngenta	> 5,000
triflumizole	Procure, Terraguard, Viticure	F	Chemtura	2,230
trifluralin	Preen, Treflan, various	H	Dow AgroSciences, various	> 10,000
trinexapac-ethyl	Primo, various	PGR	Syngenta, various	> 5,000
triticonazole	Trinity	F	BASF	> 5,000
uniconazole	Concise, Sumagic	PGR	Fine, Valent	2,020
vinclozolin	Curalan, Touche	F	BASF	> 10,000
warfarin	Rodex	R	Bell, Hacco, various	186
zinc phosphide[1]	various	R	Bell, Hacco, various	45.7
ziram	Ziram	F	United Phosphorus, Taminco	1,400
zoxamide	Gavel, Zing, Zoxium	F	Gowan	> 5,000

Protecting Honey Bees

Troy Anderson, Assistant Professor of Insect Toxicology, Virginia Tech

Honey bees are a valuable service to apiculture and agriculture not only because of they produce honey and beeswax, but they are the most important pollinators of cultivated crops. Pesticide poisoning of honey bees, and other beneficial insects, can be a serious problem. Every effort should be made to minimize the exposure of honey bees to pesticides in treated areas.

Causes of Honey Bee Poisoning

1. The majority of honey bee poisoning occurs when pesticides are applied to crops in bloom. This includes crop plants such as sweet corn, which is routinely sprayed when in tassel. Honey bees do not pollinate corn; however, they will collect pollen from corn tassels and transport it back to the honey bee hive.
2. The application of pesticides to fields with weeds in bloom. The spring application of pesticides to alfalfa fields with flowering weeds is a particular problem in Virginia.
3. The drift of toxic sprays or dusts to adjoining crops or weeds in bloom.
4. The contamination of flowering ground-cover crops in orchards treated with pesticides.
5. The contamination of water or dew on foliage and flowers. This includes the water collected by honey bees for drinking and cooling the honey bee hive.
6. The application of systemic pesticides and the potential contamination of nectar and pollen collected by foraging honey bees. The use of neonicotinoid pesticides (e.g., clothianidin, imidacloprid, and thiamethoxam) is a concern for honey bee poisoning; although, there is a need for more research evidence.

The most serious poisonings result with honey bees that collect pesticide-contaminated pollen or nectar and transport these materials to the honey bee hive. Pesticide dusts (e.g., Sevin) and encapsulated pesticides are especially dangerous. These pesticides can adhere to foraging honey bees, be transported to the hive, and stored for long periods of time. Such pesticides may cause honey bee mortality in the hive for several months.

Ways to Reduce Honey Bee Poisoning

1. Contact beekeepers with honey bee hives near areas to be treated with pesticides that are hazardous to honey bees.
2. Do not apply pesticides that are toxic to honey bees on crops in bloom.
3. Use pesticides that are less toxic to honey bees when such choices are consistent with pest control recommendations (e.g., see table of relative pesticide toxicities).
4. Choose the least hazardous pesticide formulations when possible. Pesticide dusts and encapsulations are more toxic than sprays of the same material. Pesticides applied as wettable powder sprays tend to have longer residual effects (and are more toxic) than the emulsifiable concentrate sprays. Granular applications of pesticides are typically the safest method of treatment in areas with honey bee hives.
5. Avoid drift of toxic pesticide sprays onto ground-cover plants, weeds, and crops in nearby fields.
6. Control weeds in fields and avoid direct pesticide applications to flowering weeds when possible. Mow before pesticide application, if orchards have ground-cover plants in bloom.
7. Apply pesticides in the late evening or early morning when honey bees are not actively foraging. This is important with crops such as corn, since pollen is released in the morning. The evening application of pesticides to such crops are less hazardous and will reduce the unintentional poisoning of honey bees..
8. Do not apply pesticides if temperatures are expected to be unusually low following pesticide treatment. Pesticide residues can remain toxic to honey bees for longer periods of time under low temperature conditions.
9. Avoid the direct application of pesticides over honey bee hives.
10. Allow beekeepers an option to move or confine honey bee hives that are near areas to be treated with pesticides, if there is a potential for honey bee loss.

Relative Toxicity of Pesticides to Honey Bees by Laboratory and Field Tests

Group I. Highly Toxic

Severe losses may be expected if these pesticides are used when honey bees are present at treatment time or within a day *thereafter*.

Abamectin

Acetamiprid, Assail, Tristar

Acramite (bifenazate)

Actara, Centric, Platinum, Helix, Cruiser, Adage (thiamethoxam)

Acephate

Admire, Advantage, Gaucho, Merit, Premise, Touchstone (imidacloprid)

Advantage

Ambush (permethrin)

Ammo (Fury) (>.025 lb/A) (cypermethrin)

Apollo, Ovation (clofentezine)

Asana (esfenvalerate)

Avaunt (Advion) (indoxacarb)

Avid (avermectin)

Azodrin (monocrotophos)

Baygon (propoxur)

Baytex (fenthion)

Baythroid (cyfluthrin)

Bidrin (dicrotophos)

Capture, Annex, Brigade (bifenthrin)

Carzol

Cidial (phenthoate)

Clutch (clothianidin)

Commodore (lambda-cyhalo-thrin)

Comply (fenoxycarb)

Curacron (profenofos)

Cygon (dimethoate)

Cymbush

Danitol (fenopropathin)

Dasanit (fensulfothion)

DDVP (dichlorvos)

Decis (decamethrin)

Delegate, Radiant (spinetoram)

Denim (emamectin benzoate)

Dibrom (naled)

De-fend, Dimate (dimethoate)

Diazinon (spectracide)

Dimecron (phosphamidon)

Dinotefuran

Dursban, Eradex (chlorpyrifos)

Ectrin (fenvalerate)

Endigo

Envidor (spirodiclofen)

EPN

Ethyl guthion (azinphos-ethyl)

Famphos (famphur)

Ficam (bendiocarb)

Flagship (thiamethoxam)

Folimat

Fipronil

Furadan F (carbofuran)

Fury (zeta-cypermethrin)

Guard Star (permethrin)[1]

Guthion (azinphos-methyl)

Imidan (phosmet)

Karate

Lannate D (methomyl)

Lindane

Lorsban (chlorphyrifos)

Malathion

Matacil (aminocarb)

Mesurol (methiocarb

Monitor (methamidophos)

Nexter (pyridaben)

Nudrin (methomyl)

Orthene (acephate)

Parathion

Pay Off (flucythrinate)

Phosphamidon

Pirimiphos-methyl (Execute, Actellic)

Poncho, Titan, Clutch, Acceleron, Arena, Belay, Celero (clothianidin)

Pounce (permethrin)

Prallethrin

Proaxis (gamma-cyhalo-thrin)

Proclaim (emamectin)

Provado (imidacloprid)

Pydrin (fenvalerate 0.1 lb/A)[2]

Pylon, Phantom (chlorfenapyr)

Pyramite

Rebelate (dimethoate)

Resmethrin

Scout (tralomethrin)

Sevin (carbaryl)[3]

Sniper

Spectracide

Steward (indoxacarb)

Sumithion (fenitrothion)

Supracide (methidathion)

Swat (bonyl)

Synthrin (resmethrin)

Talstar

Tameron (methamidophos)

Tefluthrin (Force)

Temik (aldicarb)

TEPP

Tralomethrin (Saga)

Trimax

Vapona (dichlorvos)

Venom (dinotefuran)

Warrior (lambda-cyhalo-thrin)

Zectran (mexacarbate)

Zephyr (Agri-Mek) (abamectin)

Zeta-cypermethrin

[1]Can be applied to ground in front of honey bee hives for the control of small hive beetles.
[2]Can be applied in the late evening at rate of 0.1 lb/A or less.
[3]Some formulations of Sevin XLR are rated as moderately toxic to honey bees.

Group II. Moderately Toxic

These can be used around honey bees if dosage, timing, and method of application are correct, but should not be applied directly on honey bees in the field or at the honey bee hive.

Abate (temophos)

Acramite, Floramite (bifenazate)

Assail (acetamiprid)

Banol (carbanolate)

Bolstar (sulprofos)

Calypso (thiacloprid)

Carzol (formetanate)

Chlordane

Ciodrin (crotoxyphos)

Coumaphos[1] (Agridip, Asunthol)

Counter (terbufos)

Decis, Battalion (deltamethrin)

Di-Syston (disulfoton)

Dyfonate (fonofos)

Elgetol (dinitrocresol)

endrin

Esteem (pyriproxyfen)

Ethodan (Ethion)

Larvin (thiocarb)

Metasystox (demeton-s-methyl)

Metasystox R (oxydemeton-methyl)

Mocap (ethoprop)

Oil sprays (superior type)

Rimon, Pedestal (novaluron)

SpinTor, Conserve SC, Entrust, Success (spinosad)

Spirotetramet (Movento)

Systox (demeton)

Trigard (cyromazine)

Thimet (phorate)[2]

Thionex (endosulfan)

Trithion, Thiodan (carbophenothion)

Vydate (oxamyl)

[1]Checkmite (coumaphos) strips can be used in honey bee hives to treat for varroa mites and small hive beetles.
[2]Thimet EC should only be applied during late evening.

Group III. Relatively Nontoxic

These can be used around honey bees with a minimum of injury; safest if applied in the evening or early morning.

Acaraben (chlorobenzilate)

Acarol (bromopropylate)

Agri-Mek (avermectin)

Allethrin

Altosid (methoprene)

Amitraz

Apollo, Ovation (clofentezine)

Applaud, Centaur (buprofezin)

Aza-direct (azadirachtin)

Baam (amitraz)

Bacillus thuringiensis (Accoate, Biotrol, Dipel, Thuricide)

Birlane (chlorfenvinphos)

Calypso (thiacloprid)

Chlorantraniliprole

Chloroparacide (chlorbenside)

Confirm, Mimic (tebufenozide)

Cyd-X (CM granulovirus)

Cyrolite

Delnav (dioxathion)

Demize (D-Limonene)

Dessin (dinobuton)

Dimilin (diflubenzuron)

Dinocap (Karathane)

Dylox (trichlorfon)

Endeavor (Pymetrozine)

Ethrel (ethephon)

Esteem (pyriproxyfen)

Flonicamid

Fujimite, Akari (fenpyroximate)

Fulfill (pymetrozine)

Fundal, Galecron (chlordimeform)

Heliothis polyhedrosis virus

Herculex

Hexygon

Intrepid (methoxyfenozide)

Isomate

Kanemite (acequinocyl)

Kelthane (dicofol)

Mach 2 (halofenozide)

Mavrik (tau-fluvalinate)[1]

Methoxychlor (Marlate)

Mitac (amitraz)

Morocide (binapacryl)

Murvesco (fenson)

Neemix, Align (azidirachtin)

Neotran

Nicotine

Omite (propargite)

Ovotran (ovex)

Pentac (dienochlor)

Plictran [mitacid] (cyhexatin)

Pynamin

Pyrellin (rotenone/pyrithrin)

Pyrethrum (natural)

Rotenone

Ryania

Sabadilla

Saphos (menazon)

Savey, Onager (hexythiazox)

Shuttle

Smite (sodium azide)

Spiromesifen (Oberon, Forbid)

Spur (fluvalinale)

Sucrocide (sucrose octanoate esters)

Surround (kaolin)

Talus (buprofezin)

Tedion (tetradifon)

Tetram

Tetrasan

Torak (dialifor)

Trigard (cyromazine)

Vendex (fenbutatin oxide)

Yieldgard

Zeal, Secure (etoxazole)

[1]*tau*-Fluvalinate is used in Apistan strips to treat honey bee hives for varroa mites. It is illegal to use Mavrik in honey bee hives.

Fungicides

As a general rule, fungicides are safe to use around honey bees.

Afugan (pyrazophos)
Arasan (thiram)
Bayleton (triadimefon)
Benlate (benomyl)
Bordeaux mixture
Boscalid (emerald, endura, pristine)
Bravo (chlorothalonil)
Captan
Carbendazim (Fungisol, Polyphase)
Copper oxides
Copper oxychloride sulfate
Copper sulfate
Cupric hydroxide (Kocide)
Cyprix (dodine)
Cyprodinil
Daconil (chlorothalonil)
Dessin (dinobuton)
Difenoconazole
Difolatan (captafol)
Dithane D-14 (nabam)
Dithane M (maneb, manzeb)
Dithane Z (zineb)
Du-Ter (fentin hydroxide)
Dyrene (anilazine)
Ferbam
Fluoxastrobin
Glyodin
Hinosan (edifenphos)
Indar (butrizol)
Iprodoine[2]
Karathane
Lesan (fenaminosulf)
Maneb
Mancozeb
Morestan (oxythioquinox)
Morocide (binapaeryl)
Myclobutanil
Mylone (dazomet)
Phygon (dichlone)
Plantvax (oxycarboxin)
Polyram (metriam)
Propiconazole[1] (Alamo, Banner)
Pyraclostrobin[2]
Pyrimethanil[1] (Philabuster, Penbotec)
Ridomil
Rovral (iprodione)[2]
Sulfur
Syllit (dodine)
Terraguard[1], Procure (triflumizole)
Tetraconazole (Domark, Eminent)
Thiram
Thylate
Vinclozolin[2]
Vitavax (carboxin)
Zineb

[1] May increase the toxicity of neonicotinoid pesticides to honey bees if used together.
[2] May cause loss of honey bee larvae. Use with caution where honey bees are foraging.

Herbicides, Defoliants and Desiccants

2,4-D
2,4-DB
2,4-DP (dichlorprop)
Alachlor
Alanap (naptalam)
Alopex (clofop-isobutyl)
Amiben (chloramben)
Amitrol
Ammate
Atrex (atrazine)
Avenge (difenzoquat)
Balan (benefin)
Banvel (dicamba)
Basagran (bentazon)
Betanal AM (bentanex)
Bladex (cyanazine)
Blazer (acifluorfen)
cacodylic acid
Cambilene (2,3,6-TBA)
Caparol (prometryn)
Chloro-IPC (chlorpropham)
Cotoran (fluometuron)
Daconate (MSMA)
Dalapon
Diquat
DSMA
Dual (metolachlor)
Endothall (endothall)
Eptam
Evik (ametryn)
Evital (norflurazon)
Exhalt 800
Folex (desmedipham)
Garlon (triclopyr)
Glyphosate
Gramoxone (paraquat)
Herbisan (EXD)
Hoelon (diclofop-methyl)
Hyvar (bromacil)
IPC (propham)
Karmex (diuron)
Kerb (proamide)
Lasso (alachlor)
Lorox (linuron)
MCPA
Methar, DSMA
Milogard (propazine)
Modown (bitenox)
MSMA
Mylone (dazomet)
Nortron (ethofumesate)
Oxyfluorfen[1]
Paarlan (isopropalin)
Paraquat
Pendimethalin[1] (Prowl)
Phenmedipham (Betanal)
Pramitol (prometone)
Princep (simazine)
Probe (methazole)
Propanil[1]
Prowl (pendimethalin)
Pyramin (chloridazon)
Ramrod (propachlor)
Randox
Ronstar (oxadiazon)
Sancap (dipropetryn)
Sencor (metribuzin)
Sinbar (terbacil)
Surflan (oryzalin)
Sutan (butylate)
Telvar (monuran)
Tolban (profluralin)
Tordon (picloram)
Treflan (trifluralin)[1]
Vegadex
Zorial (norflurazon)

[1] Slightly toxic to honey bees

Insect Control in Field Crops

Curt Laub, Research Associate, Virginia Tech

Note: before applying any insecticide to a crop, make sure that a definite insect problem exists. If you are unable to make this determination, contact your local county Extension agent for advice or assistance. Use pesticides only when necessary.

Grain Crops, Soybeans, Forages

Cultural Control Methods

Although the recommendations in this publication deal primarily with chemical control, the use of insecticides on field crops should be considered supplementary to insect control by cultural methods. In many instances, growers who follow accepted cultural practices can expect little trouble from insect pests. This is especially true in the case of insects attacking conventionally tilled field corn.

Some of the most beneficial cultural methods for problem insects affecting field crops are plowing, fertilization, and crop rotation. Deep and clean plowing in the spring destroys insects in the soil (corn earworms and root aphids) and in dead stalks (European corn borer), as well as those feeding on winter weeds and clover (root webworms and cutworms). Proper fertilization gives corn and other field crops the ability to outgrow insect attacks. Rotating corn prevents trouble with corn root aphids and corn rootworms.

In addition to cultural methods, there are field crop varieties on the market that are resistant to certain insects. For example, some of the field corn varieties show resistance to corn leaf aphids and at least two of the varieties of wheat recommended in Maryland are resistant to Hessian fly.

Alfalfa Weevil

There are two cultural control tactics that can be utilized to reduce alfalfa weevil damage. In the late fall, remove the alfalfa for hay or by grazing. This removes the overwintering egg-laying sites for the adult weevils, and will help reduce the number of alfalfa weevil larvae attacking the crop the following spring. Early harvest can sometimes be used in the spring instead of insecticide sprays, if the crop has obtained sufficient growth before larval feeding damage becomes severe.

Potato Leafhopper

Spring-planting alfalfa with a companion crop of oats will help prevent soil erosion, and also reduce potato leafhopper infestations in the first summer cutting of alfalfa.

True Armyworm

In no-till corn planted into winter rye cover crop, research at Virginia Tech has shown that rotary mowing of the rye cover crop after it has initiated seed heads will not only kill the cover crop, but also will dramatically reduce the number of armyworm larvae early in the growing season when the corn is susceptible to damage from armyworm feeding. If mowing is to be used to kill the winter cover crop, corn planting should follow as soon as possible after mowing to facilitate coulter penetration of the rye mulch.

Northern and Western Corn Rootworms

Rotating corn with any other crop [except for squash, pumpkin, etc. (Cucurbitaceae)] for one year will control corn rootworms, since the eggs of these pests are laid in corn fields during the summer.

Note: Any insecticide applied to a crop in bloom will kill honey bees and other pollinating insects. The magnitude of bee loss can be lessened considerably by spraying in late afternoon or evening.

Table 4.1 - Chemical Class, Oral LD_{50}, Worker Re-entry Time, and Toxicity of Some of the Insecticides Recommended in this Publication

		Toxicity to Mammals				Worker re-entry time in days	Toxicity[3] to		
Insecticides	**Trade name**	**Chemical class[1]**	**Oral LD_{50}[2]**	**Acute oral**	**Acute dermal**		**Birds**	**Fish**	**Bees**
Acephate	Orthene	OP	361	Moderate	Moderate	*	Moderate	Low	NA
Bacillus thuringiensis	Dipel, Thuricide	LO	—	Very low	Very low	*	Very low	Very low	Very low
Carbaryl	Sevin	C	500	Low	Low	*	Low	Very low	High
Chlorpyrifos	Dursban, Lorsban	OP	163	Moderate	Moderate	*	Moderate	NA	NA
Diazinon	Diazinon	OP	76	Moderate	Moderate	*	Moderate	High	High
Dimethoate	Dimethoate	OP	215	Moderate	Moderate	*	Moderate	Low	High
Disulfoton	Di-Syston	OP	2	High	High	*	Moderate	NA	Moderate
Ethion		OP	70	Moderate	Moderate	1	High	High	Low
Ethoprop	Mocap	OP	62	High	High	*	Moderate	NA	NA
Fenvalerate	Pydrin	P	450	Moderate	Low	*	NA	High	High
Malathion		OP	1,000	Low	Low	*	Low	High	High
Methidathion	Supracide	OP	25-65	High	Moderate	*	NA	NA	NA
Methiocarb	Mesurol	C	130	Moderate	Low	*	High	High	High
Methomyl	Lannate, Nudrin	C	17	High	Moderate	*	Low	NA	NA
Microencapsulated methyl parathion	Penncap-M	OP	270	Low	Low	*	High	High	High
Permethrin	Ambush, Pounce	P	4,000	Low	Low	*	NA	High	High
Phorate	Thimet	OP	1	High	High	*	Moderate	NA	Moderate
Phosmet	Imidan	OP	147	Moderate	Low	*	Moderate	NA	NA
Terbufos	Counter	OP	4	High	High	*	High	High	NA
Thiodicarb	Larvin	C	66	Moderate	Low	*	NA	NA	Moderate

*Worker cannot enter a treated field without protective clothing until the spray has dried or the dust has settled.
[1]C = carbamate; CH = chlorinated hydrocarbon; LO = living organism; OP = organophosphate; P = pyrethroid.
[2]Based on technical product.
[3]NA = Not available

Table 4.2 - Restricted and General-use Pesticides

Insecticide	Restricted (R)[1] or general (G) use	Insecticide	Restricted (R)[1] or general (G) use
Acephate	G	Malathion	G
Azinphosmethyl	R 3	Methidathion	R 6
Bacillus thuringiensis	G	Methiocarb	G
Carbaryl	G	Methomyl	R 4, 8
Chlorpyrifos	G	(microencapsulated)	R 2, 4, 6, 8
Diazinon	G	Monocrotophos	R 6, 8
Dimethoate	G	Parathion	R 2, 3, 6, 7, 8
Disulfoton	R 2, 3	Permethrin	R 7
Ethion	G	Phorate	R 2, 6, 8
Ethoprop	R 2	Phosmet	G
Fenvalerate	R 7	Thiodicarb	G

[1]Reasons for restrictions are as follows: R 1 = acute oral toxicity; R 2 = acute dermal toxicity; R 3 = acute inhalation toxicity; R 4 = accident history; R 5 = possible oncogenicity; R 6 = effects on birds; R 7 = effects on fish or other aquatic life; and R 8 = effects on terrestrial wildlife.

Forages: Alfalfa and Other Legumes

Curt Laub, Research Associate, Virginia Tech

Alfalfa Weevil

Sampling to Determine Whether Control Measures Are Needed

When the alfalfa starts growing in the spring, walk through the field at least once a week and closely inspect alfalfa tips for feeding injury. When damage and weevil larvae are observed, systematic sampling should be conducted (using the procedure described below) at least once weekly (or more frequently if weevil populations are approaching the action threshold) until the fields are sprayed, harvested, or the weevil season is over. If you are required to spray early and you use a short-residual insecticide, wait 2 to 3 weeks after spraying and resume the sampling program.

Equipment needed to sample a field includes a 3- to 5-gallon bucket, a shallow dishpan, a clipboard with pencil and paper, and tape measure or folding rule. Mentally divide the field into 6 equal sections and walk to the approximate center of the first section. Randomly pull 10 entire stems and place them, tip end first, into the bucket. Be careful to hold the bucket under each stem tip as it is pulled to catch any weevil larvae that may fall off. When the ten stems are collected, grasp them firmly by the base and shake them vigorously against the sides of the bucket for 5 to 10 seconds. As you are shaking the stems, hold the clipboard over the top of the bucket to prevent larvae from being thrown out. Pour the contents of the bucket into the shallow dishpan and count the total number of all weevil larvae.

Randomly select two of the stems from your sample and measure their lengths. Record the number of larvae and the two stem lengths on your clipboard. Walk to the approximate center of the other 5 sections of field and repeat the sampling procedure. Note: in a fairly large field (greater than 20 acres) you may wish to take a few extra samples to improve your sampling accuracy. When you have finished the field, total the larvae and stem lengths for all six sample sites. Determine the average number of larvae/stem by dividing the total by 60 (10 stems at 6 sites) and the average stem length by dividing by 12. Then refer to the decision-making chart, Fig. 4.1. Plot your average number of larvae/stem against stem height. If the point falls near or above the economic threshold line, either harvest or treat the field with a short-residual insecticide. If the point falls below the threshold line, no control measures are recommended; sample again in 5 to 7 days. More frequent sampling may be desired if population levels are approaching the threshold and daily temperatures are above 70° F. **Note: these thresholds are intended for alfalfa growing under adequate fertility and soil moisture conditions. Under drought stress conditions, when alfalfa is growing slowly, the threshold should be lowered by about 0.5 weevil per stem.**

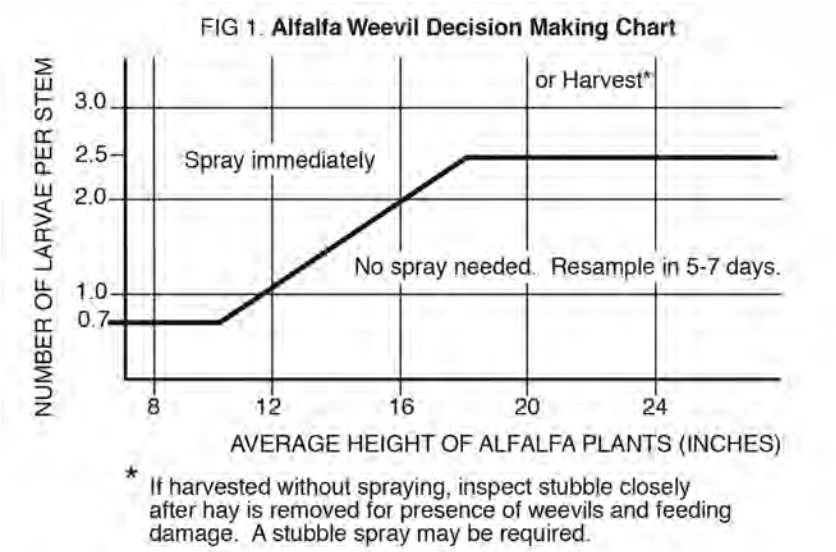

Fig. 4.1. Decision-making chart for determining the need to apply insecticides for alfalfa weevil control.

Spray or Harvest for Weevil Control?

In weevil control zone A, roughly east of the Blue Ridge Parkway, (Fig. 4.2), good survival of overwintering weevil eggs and warm temperatures often result in early larval hatch, causing damage when alfalfa is less than 6 inches tall. Population surveys should be initiated early. If 50 percent of the tips have been damaged and the alfalfa is less than 6 inches tall, spray as soon as possible. In zones B and C, however, the need to control alfalfa weevil varies from year to year, and field sampling should be conducted to determine population levels. Harvesting often can be used as an effective weevil control tactic, if enough growth is present to justify the harvesting process. Yield sacrificed in the first cutting by early harvest will be compensated in 2nd and subsequent cuttings. Cutting alfalfa early assures high quality hay with high protein and TDN, and reduces chance of losing hay to rainy weather later in the season. Early cutting also gives the second growth of alfalfa a head start before the potato leafhopper adults appear in early June. The decision to cut or spray should be based on favorable hay-making weather and time scheduling with other farm operations. If hay is cut before the bud stage in the first cutting, second and subsequent cuttings should be allowed to reach 0.10 bloom before cutting to insure adequate storage of root carbohydrates. Alfalfa may be harvested early only once during the growing season without reducing stand density or longevity.

Determining the Need for Stubble Sprays

If insecticide sprays are used prior to harvest of the first cutting, stubble sprays are seldom necessary. However, if no sprays have been used, or if the field has been cut early because of a heavy weevil infestation, stubble sprays **may** be necessary. Within a week after the hay has been removed from the field, closely inspect the growing shoots of the alfalfa for the presence of larvae or signs of feeding. No formal sampling plan or economic thresholds are available for this crop stage, but, generally, if weevil larvae are easily found, shoot damage is occurring, or regrowth appears delayed, a stubble spray should be applied. Adult weevils can occasionally cause severe damage to regrowth, but because the adult weevils usually hide under the alfalfa crown during the day, they are not easily seen.

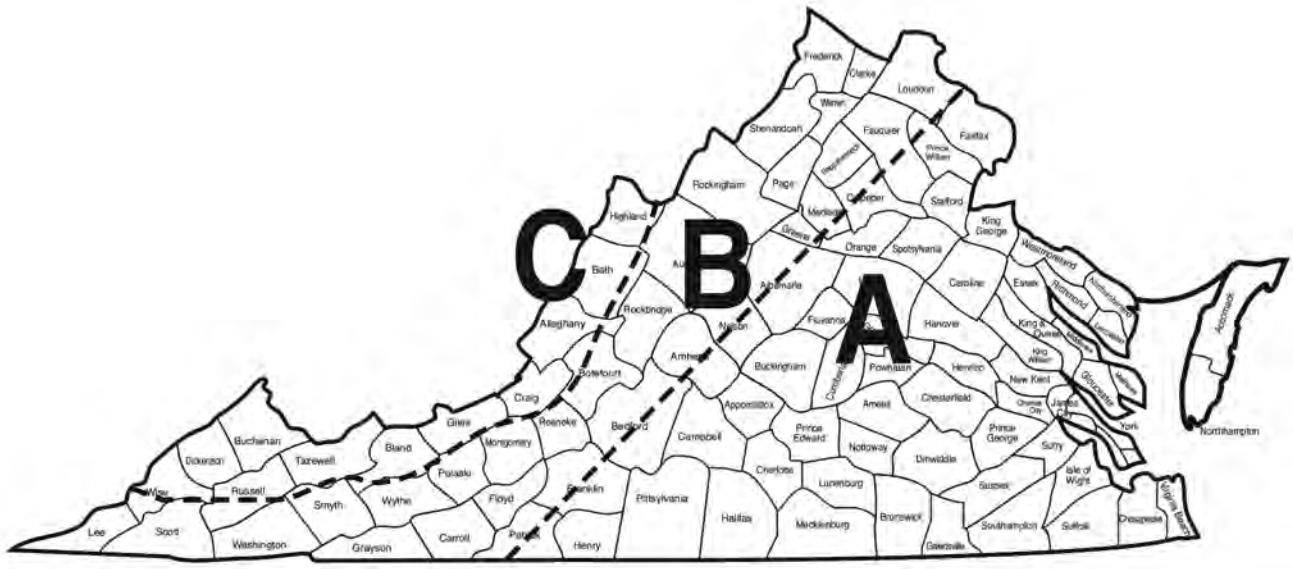

Fig. 4.2. Alfalfa Weevil Control Zones

The dividing line between Zone A and Zone B is roughly the Blue Ridge Parkway.

The line dividing Zone B and Zone C roughly follows the county lines.

Table 4.3 - Recommended Insecticides for Control of Alfalfa Weevil

Insecticide (Formulation)	Amount active ingredient per acre	Amount product per acre	Time limits: days before harvest	Remarks
beta-cyfluthrin (Baythroid XL)	0.0125-0.022 lb	1.6-2.8 oz	hay harvest: 7 grazing: 7	**RESTRICTED USE.** Maximum product allowed per cutting is 5.6 oz/A. Maximum product allowed per crop season is 22.4 oz/A.
chlorpyrifos (Lorsban 4E)	0.5-1 lb	1.0-2.0 pt	1 pt: 14 > 1 pt: 21	Some temporary yellowing may occur after application, but this will disappear within a week and not cause yield loss. Do not apply if nearby bees are clustered outside of hives and bees are foraging in the area to be treated. Do not apply more than 4 times/year or more than once/cutting.
chlorpyrifos, zeta-cypermethrin (Stallion [3.03 lb AI/ gal prod])	—	9.25-11.75 oz	7 cutting, grazing, or harvesting seed	**RESTRICTED USE.** Do not make applications of Stallion or other products containing chlorpyrifos <10 days apart. Maximum 32.5 oz product/A/season. Product is highly toxic to bees if exposed to direct application to alfalfa.
indoxacarb (Steward EC)	0.065-0.11 lb	6.7-11.3 oz	7	Apply no more than once per cutting. A total of 45 oz/A may be applied/season.
lambda-cyhalothrin (Karate [2.08EC]) (Warrior II [2.08EC])	0.02-0.03 lb	1.28-1.92 oz	forage harvest: 1 hay harvest: 7	**RESTRICTED USE.** Apply as required by scouting. **Ground application**: use 10 to 20 gal water/A. **Aerial application:** use 2 to 10 gal water/A. Apply in sufficient water for full coverage. Do not apply >0.12 pt/A/cutting. Do not apply >0.48 pt/A/ season.
methomyl (Lannate LV 2.4)	0.9 lb	3.0 pt	7	**RESTRICTED USE.** 48 hour re-entry interval. Also labeled for beet armyworm.
phosmet (Imidan 70-W)	1.0 lb	1-1.3 lb	7	**RESTRICTED USE.** Follow safety precautions on label. Do not apply more than once/cutting. Five day restricted entry interval.
permethrin (Pounce 25WP) (Ambush 25WP)	0.1-0.2 lb 0.1-0.2 lb	6.4-12-8 oz 6.4-12.8 oz	≤ 0.1 lb AI/A: 0 > 0.1 lb AI/A: 14	**RESTRICTED USE.** Do not apply more than 0.2 lb AI/A per cutting. When honey bees are foraging, apply during early morning or evening.
zeta-cypermethrin (Mustang Max)	0.014-0.025 lb	2.24-4.0 oz	cutting/grazing: 3 seed harvest: 7	**RESTRICTED USE.** Minimum 7 days between applications. Maximum 0.025 lb AI/cutting. Maximum 0.075 lb AI/season.

Note: to avoid injury to honey bees, do not apply insecticides during bloom.

Potato Leafhopper

Sampling Methods and Action Thresholds

Although several natural enemies prey upon potato leafhoppers in alfalfa, damaging levels of leafhopper are often reached, requiring insecticide application or harvest management. Leafhopper infestations are highly variable from field to field and from year to year; therefore, monitoring of individual fields is required for effective pest management decision-making. Leafhoppers are most easily sampled using a standard 15-inch diameter sweep net. At each of 6 randomly selected sites in a field, take 10 pendular sweeps with the net (swinging it back and forth in front of you) as you walk. One sweep equals one stroke of the net. After the last sweep, quickly grab the net to prevent insects from escaping. Carefully unfold the net, working your way toward the bottom. Count the number of leafhopper adults and nymphs as they emerge and leafhoppers in the bottom of the net. In fields with high leafhopper infestations, many leafhopper nymphs can be seen on the top and edge of the sweep net before the net is opened to examine the contents. Include these in your count. At each sample site, also measure and record the lengths of two randomly selected stems.

Record the total number of leafhoppers for all 6 sites and divide by 60 to determine the number of leafhoppers per sweep. Divide the total stem length by 12 to estimate average stem length. Then go to the Decision Making Chart shown in Fig. 4.3.

Using the Decision Making Chart

(Fig. 4.3) From the average number of leafhoppers per sweep and the average height of the plants, draw horizontal and vertical lines until they intersect. If the intersection point is above the treatment line, spray or harvest (see below) as soon as possible; if the intersection falls below the line, resample in 5 to 7 days. As can be seen from this chart, the economic threshold is variable, depending on plant height.

For example, if you collected 30 leafhoppers in 60 sweeps for an average of 0.5 leafhoppers per sweep, and your average plant height was 4 inches, spraying would be indicated by the chart. If your average plant height was 12 inches for the same leafhopper count, no spray would be indicated. Keep in mind that this decision-making chart is intended for general use, and individual fields may vary considerably in plant response to the leafhopper feeding depending on soil moisture, fertility, and cultivar.

Spray or Harvest?

Alfalfa should be harvested whenever the crop is in 10 percent or more flower regardless of leafhopper levels. Insecticidal control is most effective if applied early in the crop's growth (assuming leafhopper densities are above the economic threshold), since the spray will protect the alfalfa during the most susceptible stage of growth. As the alfalfa grows in height, the economic return on investment for insecticidal control is reduced but can still be justified if damaging population levels are present. Beyond a crop height of 14 inches, the value of insecticidal control becomes marginal, since considerable clogging of the plant's vascular tissue will have already occurred.

If plants are greater than 14 inches tall and leafhopper numbers are above the treatment threshold (see Decision-Making Chart), two management options are recommended. If the leafhopper count is above the treatment line but less than 2.3 per sweep, and the crop is showing 80 percent or more bud and less than 10 percent flower, harvest as soon as weather conditions are favorable. If the crop is not yet flowering, wait 7 to 10 days, then harvest. If the leafhopper count is greater than 2.3 per sweep, harvest as soon as the alfalfa shows 25 percent bud. Harvest as soon as possible if considerable damage has already occurred.

Harvesting will remove the damaged stems and allow new growth to begin. Newly-planted fields established in the spring are often so severely stunted by potato leafhoppers that harvesting would not produce a significant amount of hay. The crop should still be clipped to remove weeds and the damaged plants.

Determining the Need for Stubble Sprays

Harvesting alfalfa has been shown to kill most potato leafhopper nymphs and many adults. The adults are highly mobile and most adult leafhoppers surviving harvest will leave the field. Even though high numbers of leafhoppers may be present in the field prior to cutting, stubble sprays are not necessarily needed to protect the next cutting. Ideally, the alfalfa should be sampled with a sweep net (as described above) about a week after harvest, or as soon as the alfalfa starts to grow back. If leafhoppers are present at levels greater than 0.4/sweep, spraying is recommended. If sampling the regrowth is not feasible, and high numbers of leafhoppers were present before harvest, a stubble spray on the regrowth may be a good protective measure, especially if green alfalfa was left in the field following harvest. For best results, wait about 5 to 7 days after harvest, or until 4 to 6 inches of new growth has appeared.

Table 4.4 - Recommended Insecticides for Control of Potato Leafhopper

Insecticide (Formulation)	Amount active ingredient per acre	Amount product per acre	Time limits: days before harvest	Remarks
beta-cyfluthrin (Baythroid XL)	0.0065-0.0125 lb	0.8-1.6 oz	hay harvest: 7 grazing: 7	**RESTRICTED USE.** Maximum product allowed per cutting is 5.6 oz/A. Maximum product allowed per crop season is 22.4 oz/A.
dimethoate (Dimethoate 4EC)	0.25-0.5 lb	0.5-1.0 pt	10	Dimethoate also will control aphids and grasshoppers. Make only one application/ cutting.
carbaryl (Sevin 80 Solpak) (Sevin 4F)	 1.0 lb 1.0 lb	 1.25 lb 2.0 pt	 7 7	Highly toxic to bees; avoid spraying weeds in bloom or alfalfa beyond 10 percent bloom.
chlorpyrifos (Lorsban 4E)	0.25-0.5 lb	0.5-1.0 pt	0.5 pt: 7 1 pt: 14	Some temporary yellowing may occur after application, but this will disappear within a week and not cause yield loss. Do not apply if nearby bees are clustered outside of hives and bees are foraging in the area to be treated. Do not apply more than 4 times/ year or more than once/cutting.
chlorpyrifos, zeta-cypermethrin (Stallion [3.03 lb AI/ gal prod])	—	5.0-11.75 oz	7 cutting, grazing, or harvesting seed	**RESTRICTED USE.** Do not make applications of Stallion or other products containing chlorpyrifos <10 days apart. Maximum 32.5 oz product/A/season. Product is highly toxic to bees if exposed to direct application to alfalfa.
lambda-cyhalothrin (Karate [2.08EC]) (Warrior II [2.08EC])	0.015-0.025 lb	0.96-1.60 oz	forage harvest: 1 hay harvest: 7	**RESTRICTED USE.** Apply as required by scouting. **Ground application**: use 10 to 20 gal water/A. **Aerial application**: use 2 to 10 gal water/A. Apply in sufficient water for full coverage. Do not apply >0.12 pt/A/cutting. Do not apply >0.48 pt/A/season.
phosmet (Imidan 70-W)	1.0 lb	1-1.3 lb	7	Follow safety precautions on label. Do not apply more than once/cutting. Five day restricted entry interval.
permethrin (Pounce 25WP) (Ambush 25WP)	 0.1-0.2 lb 0.05-0.2 lb	 6.4-12.8 oz 3.2-12.8 oz	 ≤0.1 lb AI/A: 0 >0.1 lb AI/A: 14	**RESTRICTED USE.** Do not apply more than 0.2 lb AI/A/ cutting. When honey bees are foraging, apply during early morning or evening.
zeta-cypermethrin (Mustang Max)	0.014-0.025 lb	2.24-4.0 oz	cutting/grazing: 3 seed harvest: 7	**RESTRICTED USE.** Minimum 7 days between applications. Maximum 0.025 lb AI/cutting. Maximum 0.075 lb AI/season.

Note: do not wait until yellowing occurs. Materials should be used as a preventative treatment after leafhoppers first appear.

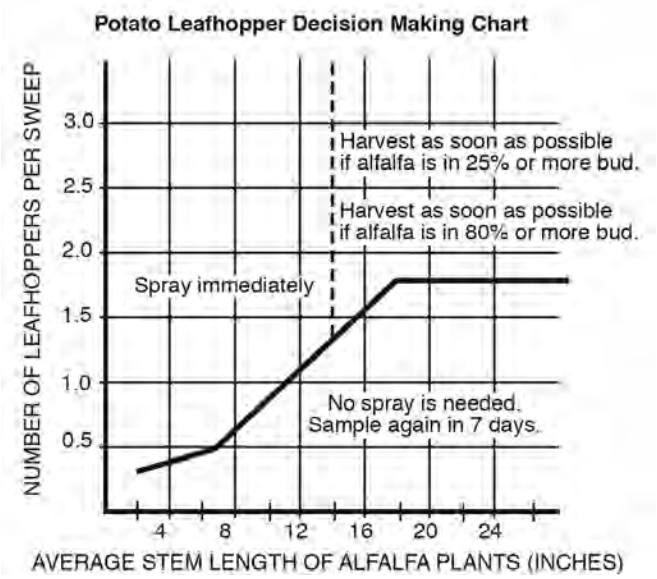

Fig. 4.3. Decision-making chart for determining the need to apply insecticides for potato leafhopper control.

Grasshopper

Table 4.5 - Grasshopper

Insecticide (Formulation)	Amount active ingredient per acre	Amount product per acre	Time limits: days before harvest	Remarks
beta-cyfluthrin (Baythroid XL)	0.0155-0.022 lb	2.0-2.8 oz	hay harvest: 7 grazing: 7	**RESTRICTED USE.** Maximum product allowed per cutting is 5.6 oz/A. Maximum product allowed per crop season is 22.4 oz/A.
carbaryl (Sevin 80 Slopak) (Sevin 4F)	0.5-1.5 lb 0.5-1.5 lb	0.67-1.875 lb 0.5-1.5 qt	7	Grasshoppers usually cause problems only during drought and in new fall seedlings. Use the lower rate for nymphs on small plants or sparse vegetation. Use the higher rate for adults or applications to dense vegetation.
chlorpyrifos, zeta-cypermethrin (Stallion [3.03 lb AI/ gal prod])	—	9.25-11.75 oz	7 cutting, grazing, or harvesting seed	**RESTRICTED USE.** Do not make applications of Stallion or other products containing chlorpyrifos <10 days apart. Maximum 32.5 oz product/A/season. Product is highly toxic to bees if exposed to direct application to alfalfa.
lambda-cyhalothrin (Karate [2.08EC]) (Warrior II [2.08EC])	0.02-0.03 lb	1.28-1.92 oz	forage harvest: 1 hay harvest: 7	**RESTRICTED USE.** Apply as required by scouting. **Ground application**: use 10 to 20 gal water/A. **Aerial application:** use 2 to 10 gal water/A. Apply in sufficient water for full coverage. Do not apply >0.12 pt/A/cutting. Do not apply >0.48 pt/A/season.
malathion (Malathion 5EC, Malathion 57EC)	1.0-1.5 lb	1.5-2.0 pt	0	Spray may be applied by air or ground equipment. **Dilute application**: use 20 to 60 gal water/A. **Concentrate application**: use ≥5 gal water/A.
zeta-cypermethrin (Mustang Max)	0.017-0.025 lb	2.8-4.0 oz	cutting/grazing: 3 seed harvest: 7	**RESTRICTED USE.** Minimum 7 days between applications. Maximum 0.025 lb AI/cutting. Maximum 0.075 lb AI/season.

Armyworm, Cutworm

Table 4.6 - Armyworm (AW), Cutworm (CW)

Insecticide (Formulation)	Amount active ingredient per acre	Amount product per acre	Time limits: days before harvest	Remarks
beta-cyfluthrin (Baythroid XL)	AW 0.0125-0.022 lb CW 0.0065-0.0125 lb	1.6-2.8 oz 0.8-1.6 oz	hay harvest: 7 grazing: 7	**RESTRICTED USE.** Maximum product allowed per cutting is 5.6 oz/A. Maximum product allowed per crop season is 22.4 oz/A. Effective against small armyworm larvae up to 2nd instar.
carbaryl (Sevin 80 Solpak) (Sevin 4F)	1.0-1.5 lb 1.0-1.5 lb	1.25-1.875 lb 1.0-1.5 qt	7 7	Apply when insects begin to cause injury. A 5% Sevin bait at 20 lb/A also is effective against cutworms.
chlorpyrifos, zeta-cypermethrin (Stallion [3.03 lb AI/gal prod])	—	AW 9.25-11.75 oz CW 2.5-11.75 oz	7 cutting, grazing, or harvesting seed	**RESTRICTED USE.** Do not make applications of Stallion or other products containing chlorpyrifos <10 days apart. Maximum 32.5 oz product/A/season. Product is highly toxic to bees if exposed to direct application to alfalfa.
lambda-cyhalothrin (Karate [2.08EC]) (Warrior II [2.08EC]) armyworm use: cutworm use:	0.02-0.03 lb 0.015-0.025 lb	1.28-1.92 oz 0.96-1.60 oz	forage harvest: 1 hay harvest: 7	**RESTRICTED USE**. Apply as required by scouting. **Ground application**: use 10 to 20 gal water/A. **Aerial application**: use 2 to 10 gal water/A. Apply in sufficient water for full coverage. Do not apply >0.12 pt/A/cutting. Do not apply >0.48 pt/A/season.
permethrin (Pounce 25WP) (Ambush 25WP)	0.05-0.2 lb 0.05-0.2 lb	3.2-12.8 oz 3.2-12.8 oz	≤0.1 lb AI/A: 0 >0.1 lb AI/A: 14	**RESTRICTED USE.** Do not apply more than 0.2 lb AI/A/cutting. When honey bees are foraging, apply during early morning or evening.
methomyl (Lannate LV) (Lannate SP)	0.225 - 0.9 lb	AW 1.5-3.0 pt CW 0.75-3.0 lb AW 0.5-1.0 pt CW 0.25-2.0 pt	7	**RESTRICTED USE.** Do not apply to dormant or semi- dormant alfalfa when minimum daily temp. is ≤50°F. Wait 7 days after application before grazing or feeding livestock.
zeta-cypermethrin (Mustang Max)	0.014-0.025 lb	AW 2.8-4.0 oz CW 2.24-4.0 oz	cutting/grazing: 3 seed harvest: 7	**RESTRICTED USE.** Minimum 7 days between applications. Maximum 0.025 lb AI/cutting. Maximum 0.075 lb AI/season.

Pea Aphid

Sampling/Decision Making

The need to treat for pea aphids is rare (1 year in 10) in Virginia, Maryland, and Delaware because lady bird beetles, wasp parasites, and other beneficial insects usually control this pest. The best sampling technique requires the same 15-inch sweep net used for potato leafhoppers. Ten sweeps at 10 random locations should be used to sample both the aphids and beneficials. If 50 or more aphids per sweep are collected and no beneficials are present, it is recommended that the field be cut early. Avoid spraying first crop because sprays will kill alfalfa weevil parasites.

Table 4.7 - Recommended Insecticides for Controlling Pea Aphids

Insecticide (Formulation)	Amount active ingredient per acre	Amount product per acre	Time limits: days before harvest	Remarks
beta-cyfluthrin (Baythroid XL)	0.022 lb	2.8 oz	hay harvest: 7 grazing: 7	**RESTRICTED USE.** Maximum product allowed per cutting is 5.6 oz/A. Maximum product allowed per crop season is 22.4 oz/A.
chlorpyrifos, zeta-cypermethrin (Stallion [3.03 lb AI/ gal prod])	—	9.25-11.75 oz	7 cutting, grazing, or harvesting seed	**RESTRICTED USE.** Do not make applications of Stallion or other products containing chlorpyrifos <10 days apart. Maximum 32.5 oz product/A/season. Product is highly toxic to bees if exposed to direct application to alfalfa.
dimethoate (Dimethoate 4EC)	0.25-0.5 lb	0.5-1.0 pt	10	Make only one application/ cutting.
malathion (Malathion 5EC) (Malathion 57EC)	1.0-1.5 lb	1.5-2.0 pt	0	**RESTRICTED USE.** Warm weather favors parasites and predators of aphids; thus control may not be required if the weather forecast predicts a warm trend. Spray may be applied by air or ground equipment. **Dilute application**: use 20 to 60 gal water/A. **Concentrate application**: use ≥5 gal water/A.
lambda-cyhalothrin (Karate [2.08EC]) (Warrior II [2.08EC])	0.02-0.03 lb	1.28-1.92 oz	forage harvest: 1 hay harvest: 7	**RESTRICTED USE.** Apply as required by scouting. **Ground application**: use 10 to 20 gal water/A. **Aerial application**: use 2 to 10 gal water/A. Apply in sufficient water for full coverage. Do not apply >0.12 pt/A/cutting. Do not apply >0.48 pt/A/season.
methomyl (Lannate LV) (Lannate SP)	0.45 - 0.9 lb	 1.5-3.0 pt 0.5-1.0 pt	7	**RESTRICTED USE.** Do not apply to dormant or semi- dormant alfalfa when minimum daily temp. is ≤50°F. Wait 7 days after application before grazing or feeding livestock.
permethrin (Pounce 25WP) (Ambush 25WP)	 0.05-0.2 lb 0.05-0.2 lb	 3.2-12.8 oz 3.2-12.8 oz	 ≤0.1 lb AI/A: 0 >0.1 lb AI/A: 14	**RESTRICTED USE.** Do not apply more than 0.2 lb AI/A per cutting. When honey bees are foraging, apply during early morning or evening. When pea aphid densities are heavy, use maximum rate. A second application may be necessary if pest densities remain above the economic threshold.
zeta-cypermethrin (Mustang Max)	0.014-0.025 lb	2.24-4.0 oz	cutting/grazing: 3 seed harvest: 7	**RESTRICTED USE.** Minimum 7 days between applications. Maximum 0.025 lb AI/cutting. Maximum 0.075 lb AI/season.

Orchardgrass, Timothy, and Bermudagrass

Curt Laub, Research Associate, Virginia Tech

The immature stage of white grubs (i.e., Japanese beetle grubs and other related species) and billbug grubs (i.e., bluegrass billbug, hunting billbug, etc.) are the most important root-feeding pests on orchardgrass hay in Virginia. With the exception of Karate and Warrior (billbug supression), none of the insecticides labeled for orchardgrass hay include these insects on their labels. The products listed below target surface feeders and insects found in the thatch layer. Ongoing research in Virginia is working to address this problem for billbugs. Recent research conducted in Virginia showed that conspicious "paired" feeding-holes on young orchardgrass leaves in April indicate the presence of billbugs moving into fields. More importantly, these paired feeding holes, which are found within the first 15-20 feet of a field's border, begin showing up at about the same time or several days earlier than the first billbug adults are found in pitfall traps. **Be sure your crop is listed on the product label before you spray.**

Table 4.8 - Orchardgrass Hay

Pests	Insecticide (Formulation)	Amount active ingredient per acre	Amount product per acre	Time limits: days before harvest	Remarks
armyworms, cutworms, army cutworm, cereal leaf beetle, green cloverworm, meadow spittlebug	beta-cyfluthrin (Baythroid XL)	0.0125-0.015 lb	1.6-1.9 oz	grass for pasture, rangeland and seed: 0 grazing grass for hay: 0 harvest grass in mixed stands with alfalfa: 7 harvest 7 grazing	**RESTRICTED USE.** For grass grown for hay, pasture, seed, or rangeland, the maximum Baythroid XL allowed per 5-day interval is 0.022 lb AI/A (2.8 oz/A). The maximum Baythroid XL allowed per crop season or cutting is 0.089 lb AI/A (11.3 oz/A) For grass in mixed stands with alfalfa, the maximum Baythroid XL allowed per cutting is 0.022 lb AI/A (2.8 oz/A). The maximum Baythroid XL allowed per crop season is 0.089 lb AI/A (11.3 oz/A). Check label for additional details.
fall armyworm (1st & 2nd instar) yellowstriped armyworm (1st & 2nd instar) Lygus bug, stink bugs, leafhoppers, Japanese beetle (adult), June beetle (adult), grasshoppers, grass thrips, tarnished plant bug (refer to label for additional pests)	beta-cyfluthrin (Baythroid XL)	0.0125-0.022 lb	2.6-2.8 oz		
armyworm, fall armyworm, striped grass looper, chinch bugs, thrips, range caterpillar, range crane fly, essex skipper, ticks	carbaryl (Sevin XLR Plus and Sevin SL)	1.0-1.5 lb	1.0-1.5 qt	14 harvest or grazing	**Caution.** Apply as needed by scouting. Up to 2 applications per year may be made but not more often than once every 14 days. Do not exceed a total of 3 qts/A/year.
	carbaryl (Sevin 80 Solpak)	1.0-1.5 lb	1.25-1.875 lb	14 harvest or grazing	**Caution.** Up to 2 applications per year may be made but not more often than once every 14 days. Do not exceed a total of 3.75 lbs product/A/year.

Table 4.8 - Orchardgrass Hay (cont.)

Pests	Insecticide (Formulation)	Amount active ingredient per acre	Amount product per acre	Time limits: days before harvest	Remarks
army cutworm, cutworms, Essex skipper, range catepillar, striped grasslooper	lambda-cyhalothrin (Karate [2.08EC]) (Warrior II [2.08EC])	0.015-0.025 lb	0.96-1.6 oz	0 grazing 0 cut for forage 7 harvest after last application	**RESTRICTED USE.** Apply as required by scouting. Timing and frequency of applications should be based on locally determined economic thresholds. Use sufficient water for full coverage. Use ≥2 gal by air and ≥7 gal by ground.
billbug species (suppression only), beet armyworm, blue stem midge, cereal leaf beetle, chinch bug, crickets, true armyworm, yellowstriped armyworm, fall armyworm, English grain aphid, bird cherry-oat aphid, Russian wheat aphid, sugarcane aphid, greenbug [aphid] (for aphid species best control is obtained before insects begin to roll leaves), flea beetles, leafhoppers, spittlebugs, stink bugs, thrips, grasshoppers, green June beetle (adult), Japanese beetle (adult), webworms	lambda-cyhalothrin (Karate [2.08EC]) (Warrior II [2.08EC])	0.02-0.03 lb	1.28-1.92 oz		Do not apply >0.03 lb AI (1.92 oz product)/A/cutting for pastures, rangeland, and grass grown for seed. A minimum retreatment interval of 30 days is required for pastures and rangeland receiving 0.03 lb AI/A which have not been cut between applications. Do not apply >0.09 lb AI (5.76 oz product)/A/season. Check label for further details.
armyworms, aphids, cereal leaf beetle, grasshoppers, leafhoppers	malathion (Malathion 5EC)	15.0-20.0 oz	1.5-2.0 pt	0 harvest or grazing	**Warning.** REI = 12 hours. Maximum 1 application per cutting

Table 4.8 - Orchardgrass Hay (cont.)

Pests	Insecticide (Formulation)	Amount active ingredient per acre	Amount product per acre	Time limits: days before harvest	Remarks
cutworms, flea beetles, meadow spittlebug, potato leafhopper, webworms, blue alfalfa aphid, green peach aphid (Refer to label for additional pests.)	zeta-cypermethrin (Mustang Max)	0.014-0.025 lb	2.24-4.0 oz	0 forage or hay	**RESTRICTED USE.** Apply minimum 2 gal/A by air or 10 gal/A by ground. Use sufficient water to ensure thorough coverage of foliage. Applications ≥7 days apart for hay and forage. Maximum of 0.025 lb AI/A/cutting. Maximum 0.10 lb AI/A/season.
armyworms, cereal leaf beetle, grasshoppers, plant bugs (including *Lygus* spp. and stinkbugs) (Refer to label for additonal pests.)	zeta-cypermethrin (Mustang Max)	0.0175-0.025 lb	2.8-4.0 oz	0 forage or hay	**RESTRICTED USE.** Apply minimum 2 gal/A by air or 10 gal/A by ground. Use sufficient water to ensure thorough coverage of foliage. Applications ≥7 days apart for hay and forage. Maximum of 0.025 lb AI/A/cutting and Maximum 0.10 lb AI/A/season.

Table 4.9 - Timothy Hay[1]

Pests	Insecticide (Formulation)	Amount active ingredient per acre	Amount product per acre	Time limits: days before harvest	Remarks
cereal rust mite[2]	carbaryl (Sevin XLR Plus)	1.0-1.5 lb	1.0-1.5 qt	14 harvest or grazing	**Caution.** Apply with ground equipment only with adequate water for complete coverage (10-50 gal by ground). *Apply at approximately 4 weeks after green-up in the spring.* Treatment is recommended in fields with a previous history of cereal rust mite and/or when 25% of the plant tillers exhibit curled tips of the new leaf blades within several weeks of green-up. In general, one application at 1.0-1.5 qt/A should provide control. If needed, a second application can be made at least 14 days after the first application. A maximum of 2 applications/year may be made. Do not exceed a total of 3.0 qt/A/cutting.

[1] Note: The following recommendation for timothy hay is made as permitted under FIFRA Section 2(ee).

[2] The cereal rust mite, *Abacarus hystrix*, is a very small eriophyid mite (approximate length of an adult mite is 0.008 inch) that infests several grass species, with timothy being a preferred host. The deeply grooved timothy blades seem to be preferred over the smoother leaf blades of orchardgrass and other forage grasses. In Maryland, populations of more than 3,220 cereal rust mites per square inch (i.e., 500 mites per square cm) have been reported. Initial damage symptoms include lengthwise curling-up (or 'piping-up') of the leaf blade followed by the distal ends of the grass blades turning yellow then brown with the lower leaves drying out.

Cultural control option: Maryland research has shown that cereal rust mite may be controlled culturally by removing most of the aboveground growth immediately before or after the first fall frost. This action removes potential egg-laying sites.

Table 4.10 - Bermudagrass Pasture

Pests	Insecticide (Formulation)	Amount active ingredient per acre	Amount product per acre	Time limits: days before harvest	Remarks
fall armyworm, armyworm, striped grass looper	methomyl (Lannate LV)	3.6-14.4 oz	0.75-3.0 pt	7 grazing 3 cutting for hay	**RESTRICTED USE.** **(Danger Poison)** 48 hour restricted entry interval. Refer to label for proper handling and application instructions. Do not apply more than 3 pt product/A/crop. Do not make more than 4 applications/crop.

Corn

Curt Laub, Research Associate, Virginia Tech

Seedcorn Maggot

Seedcorn Maggot Sampling/Decision Making

Preventive treatment is advised on early and no-till plantings before soil is warm enough to promote quick germination. Old sod fields, pasture, heavily manured fields and fields with previous histories of seedcorn maggot damage should be treated regardless of planting time or type of tillage.

Table 4.11 - Recommended Pesticides for Controlling Seedcorn Maggot

Insecticide (Formulation)	Amount active ingredient	Amount product	Time limits: days before harvest	Remarks
beta-cyfluthrin (Baythroid XL)	0.022 lb AI/A (based on 30-inch row spacing)	0.12-0.16 oz/1,000 row ft 2.0-2.8 oz/A	grain or fodder: 21 Green forages after last application: 0	**RESTRICTED USE.** Maximum product per 7-day interval: 2.8 oz/A. Maximum product per crop season: 11.2 oz/A. Row width adjustment: for row spacing <30 inches, adjust rate of product not to exceed 2.8 oz/A. Note: Diminished control may occur when rates are decreased below recommended minimum rates per 1,000 row ft.
bifenthrin (Capture LFR)	0.04-0.16 lb AI/A	3.4-13.6 oz/A 0.2-0.78 oz/1000 row ft	—	Apply 5- to 7-inch band (T-band) over open furrow or in-furrow with the seed. Maximum 0.1 lb/A/season as an at-plant application. Maximum 0.3 lb/A/season of at-plant plus foliar applications of other bifenthrin products. Use of Capture LFR is prohibited in all coastal counties.
clothianidin (Poncho 600)	0.25-0.5 mg AI/ kernel	1.13-2.26 oz/80,000 seeds	—	Product is usually applied by manufacturer to seed upon request of grower at the time seed is ordered. Avoid breathing dust and contact with skin and eyes.
thiamethoxam (Cruiser 5FS)	0.25 mg AI/ kernel	1.13 oz/80,000 seeds	—	Product is usually applied by manufacturer to seed upon request of grower at the time seed is ordered. Avoid breathing dust and contact with skin and eyes.

Note: Check labels of the various granular and liquid soil insecticides for information and product efficacy on seedcorn maggot control.

Wireworms

Wireworm Sampling/Decision Making

First-year corn following established sod is frequently attacked by wireworms. Early sampling before planting should include bait stations. Two paired bait stations per acre are made by placing 0.5 cup of an equal mixture of untreated corn/wheat in the soil 4 inches deep and 9 inches wide. Set bait stations in fields to be planted at least 3 weeks before the planting date. Check by digging in about 2 weeks and record the number of wireworms for each station. Economic thresholds for wireworms have not been established on corn; however, if an average of 1 or more wireworms per bait station are found, a soil insecticide should be applied in the seed furrow to protect the germinated seed and newly-emerged seedlings.

Table 4.12 - Recommended Pesticides for Controlling Wireworms

Insecticide (Formulation)	Amount active ingredient per 1,000 row ft	Amount product per 1,000 row ft	Time limits: days before harvest	Remarks
beta-cyfluthrin (Baythroid XL)	0.022 lb AI/A (based on 30-inch row spacing)	0.12-0.16 oz/1,000 row ft 2.0-2.8 oz/A	grain or fodder: 21 Green forages after last application: 0	**RESTRICTED USE.** Maximum product per 7-day interval: 2.8 oz/A. Maximum product per crop season: 11.2 oz/A. Row width adjustment: for row spacing <30 inches, adjust rate of product not to exceed 2.8 oz/A. Note: Diminished control may occur when rates are decreased below recommended minimum rates per 1,000 row ft.
bifenthrin (Capture 1.15G)	0.032-0.096 oz	3.2-8.0 oz (3.5-8.7 lbs/A)	30	**RESTRICTED USE.** Apply in-furrow at planting. **Use highest rate for heavy pest pressure.**
bifenthrin (Capture LFR)	0.04-0.16 lb/ AI/A	3.4-13.6 oz/A 0.2-0.78 oz/ 1000 row ft	—	Apply 5- to 7-inch band (T-band) over ope fur-row or in-furrow with the seed. Maximum 0.1 lb/ A/season as an at-plant application. Max-imum 0.3 lb/A/season of at-plant plus foliar applica-tions of other bifenthrin products.Use of Capture LFR is prohibited in all coastal counties.
chlorpyrifos (Lorsban 15G)	2.4 oz	8.0 oz	35 grain, 14 silage, 14 grazing	Apply at planting in a 6- to 7-inch band over the row, in front of the presswheel and incorporate the granules into the top 1 inch of soil. Can also be applied in-furrow.
clothianidin (Poncho 250)	0.25-0.5 mg AI/ kernel	1.13-2.26 oz/80,000 seeds	—	Product is usually applied by manufacturer to seed upon request of grower at the time seed is ordered. Avoid breathing dust and contact with skin and eyes.
ethoprop (Mocap 15G Lock'N Load)	1.2 oz	8.0 oz	—	**RESTRICTED USE.** Apply at planting in a 6- to 7-inch band on the row **over a closed seed furrow.** Mix the granules with the top 0.5 inch of soil.
fipronil (Regent 4SC)	0.12 oz (min. 30-in rows)	0.24 oz	—	**RESTRICTED USE.** Make 1 in-furrow application at planting only. Apply in 1 gal water/A directly into the seed furrow. **Do not apply more than 0.13 lb AI/A or 4.2 fluid oz of Regent 4SC/A.**
phorate (Thimet 20G) Lock & Load, SmartBox, EZLoad	1.2 oz	4.5-6.0 oz	30	**RESTRICTED USE.** Apply at planting in a 7-inch band over the row, in front of or behind the presswheel and lightly incorporate. **Do not apply Thimet in-furrow.**
tefluthrin (Force 3G)	0.12-0.15 oz	4.5-5.0 oz	30	**RESTRICTED USE.** Apply in-furrow at planting for best control. Rotational crops may be planted 30 days after application.

Table 4.12 - Recommended Pesticides for Controlling Wireworms (cont.)

Insecticide (Formulation)	Amount active ingredient per 1,000 row ft	Amount product per 1,000 row ft	Time limits: days before harvest	Remarks
terbufos (Counter 20G SmartBox®)	0.9-1.2 oz	4.5-6.0 oz	30	**RESTRICTED USE.** Apply at planting in 7-inch band over the row, in front of or behind the presswheel and lightly incorporate. Can also be applied in-furrow. **If application is made at planting, do not makepostemergence or cultivation time treatments of Counter.** Use of Accent or Beacon herbicides following Counter applications may result in crop injury.
thiamethoxam (Cruiser 5FS)	0.25 mg AI/ kernel	1.13 oz/80,000 seeds	—	Product is usually applied by manufacturer to seed upon request of grower at the time seed is ordered. Avoid breathing dust and contact with skin and eyes.

White Grubs

White Grub Sampling/Decision Making

Spring planting into former soybean fields or old sod fields are often at risk for white grubs and, to a lesser extent, wireworms. In most years, white grub species stop feeding to pupate in mid- to late May in Virginia. Late-planted corn and conventional-tilled corn are at lower risk from white grubs.

Insecticidal seed treatments for seed and root feeders like white grubs are now applied by the manufacturer and must be ordered at the time the seed order is placed; usually from late fall to early winter. A fall soil sampling method for predicting spring-planted cornfields with economic infestations of white grubs is described below.

Compact Method (CM) Soil Sampling Strategy: Fall and spring research-based action thresholds in corn

The CM is a soil sampling strategy for white grubs that provides timely and useful information for pest management decision-making. The CM is based on an 8-inch square by 6-inch deep volume of soil that is hand-sifted for white grubs on a green plastic leaf collection bag placed on the ground next to the sample site. The CM is as accurate as the traditional 12-inch square/ standard method, but is about 57% faster, with much lower sample fatigue. The CM soil sampling strategy was designed for fall sampling as a means to provide producers with a field-specific pest management tool for better managing white grubs on their farms. Using the CM for spring soil sampling of white grubs before planting corn is as useful as fall sampling with the CM. However, keep in mind that sampling in the fall gives you more time to make a decision about white grub management than sampling in the spring.

Definition of Action Threshold (AT): Levels of pest populations at which control should be implemented to avoid significant damage to the crop (determined from research-based relationship of pest levels on yields).

Thresholds: The fall AT is ≥1.6 white grubs per CM soil sample. The spring AT is ≥1.04 white grubs per CM soil sample.

The following represents the minimum number of compact method samples needed per field to be 95 percent confident your sample average is within the specified percentage of the actual field mean:

25% 3 to 4 samples/field (about 10-15 minutes)
20% 5 to 6 samples/field (about 20-25 minutes)
15% 10 samples/field (about 30-40 minutes)
10% 22 samples/field (about ≥1.5 hours)

One point of caution, although soil sampling for white grubs works well in most soils: it is easier to hand sift lighter, sandier soils than heavier soils which do not break apart easily. No data is available for muck soils.

Table 4.13 - Recommended Pesticides for Controlling White Grubs

Insecticide (Formulation)	Amount active ingredient per 1,000 row ft	Amount product per 1,000 row ft	Time limits: days before harvest	Remarks
beta-cyfluthrin (Baythroid XL)	0.022 lb AI/A (based on 30-inch row spacing)	0.14-0.16 oz/1,000 row ft 2.5-2.8 oz/A	grain or fodder: 21 Green forages after last application: 0	**RESTRICTED USE.** SUPPRESSION ONLY. Maximum product per 7-day interval: 2.8 oz/A. Maximum product per crop season: 11.2 oz/A. Row width adjustment: for row spacing <30 inches, adjust rate of product not to exceed 2.8 oz/A. Note: Diminished control may occur when rates are decreased below recommended minimum rates per 1,000 row ft.
bifenthrin (Capture 1.15G)	0.032-0.096 oz	3.2-8.0 oz (3.5-8.7 lbs/A)	30	**RESTRICTED USE.** Apply in-furrow at planting. **Use highest rate for heavy pest pressure.**
bifenthrin (Capture LFR)	0.04-0.16 lb AI/A	3.4-13.6 oz/A 0.2-0.78 oz/1000 row ft	—	Apply 5- to 7-inch band (T-band) over open furrow or in-furrow with the seed. Maximum 0.1 lb/A/season as an at-plant application. Maximum 0.3 lb/A/season of at-plant plus foliar applications of other bifenthrin products. Use of Capture LFR is prohibited in all coastal counties.
chlorpyrifos (Lorsban 15G)	2.4 oz	8.0 oz	35 grain, 14 silage, 14 grazing	Apply at planting in a 6- to 7-inch band over the row, in front of the presswheel and incorporate the granules into the top 1 inch of soil. Can also be applied in-furrow.
clothianidin (Poncho 250)	0.25-0.5 mg AI/ kernel	1.13-2.26 oz/80,000 seeds	—	Product is usually applied by manufacturer to seed upon request of grower at the time seed is ordered. Avoid breathing dust and contact with skin and eyes. Note: Research conducted in Virginia, with partial funding from the VCB, has indicated that the lowest rate of this product gives inconsistent control of white grubs.
phorate (Thimet 20G) Lock & Load, SmartBox, EZLoad	1.2 oz	4.5-6.0 oz	30	**RESTRICTED USE.** Apply at planting in a 7-inch band over the row, in front of or behind the presswheel and lightly incorporate. **Do not apply Thimet in-furrow.**
tefluthrin (Force 3G)	0.12-0.15 oz	4.0-5.0 oz	—	**RESTRICTED USE.** Available only in SMARTBOX closed handling system. Apply as needed by scouting. Apply in furrow at planting for best control. Rotational crops may be planted 30 days after application.
terbufos (Counter 20G SmartBox®)	0.9-1.2 oz	4.5-6.0 oz	30	**RESTRICTED USE.** Apply at planting in a 7-inch band over the row, in front of or behind the presswheel and lightly incorporate. Can also be applied in-furrow. **If application is made at planting, do not make postemergence or cultivation time treatments of Counter.** Use of Accent or Beacon herbicides following Counter applications may result in crop injury.
thiamethoxam (Cruiser 5FS)	0.25 mg AI/ kernel	1.13 oz/80,000 seeds	—	See previous remarks. Note: Research conducted in Virginia, with partial funding from the VCB, has indicated that the lowest rate of this product gives inconsistent control of white grubs.

Baited Wire Trap Procedure for Scouting

Seedcorn maggot, wireworms, and white grubs can be scouted before planting

The wire trap itself consists of a 2-ft long by 3-inch wide strip of 0.25-inch hardware cloth (see image below). To strengthen the hardware cloth strip and to facilitate the placement of the corn seed bait, the strip should be bent lengthwise at a 90° angle. Use only corn seeds that have **not been treated** with an insecticidal seed treatment for bait. About 2 weeks before planting, place 20 seeds about 1 inch apart in each wire trap and then bury the baited wire trap 2 inches deep in the soil. Install at least 1 baited wire trap for every acre of corn to be planted. Remove the traps from the soil after 2 weeks and determine the average number of seeds with feeding damage in the wire traps. The following suggested guidelines may help you determine whether your field is at risk to wireworms, seedcorn maggots, or white grubs.

Suggested Treatment Guidelines Using the Baited Wire Trap Method

Conditions for using the baited wire trap method for field corn

1. Unless continuous corn fields have already been scouted for corn rootworms, baited wire traps should only be used in fields in which corn typically is grown in rotation with soybeans, alfalfa, sorghum, or peanuts (see exceptions below for explanation).
2. Refer to the following suggested treatment guidelines for seedcorn maggots, wireworms, and annual white grubs to determine if a granular insecticide may be needed at planting to prevent serious stand loss.

Seedcorn maggot

A granular insecticide may be needed at planting if the average number of seeds damaged by seedcorn maggots in the baited wire traps is **25 percent** or more; otherwise, an insecticidal seed treatment should be sufficient.

Wireworms

A granular insecticide may be needed at planting if the average number of seeds damaged by wireworms in the baited wire traps is **10 percent** or more; otherwise, an insecticidal seed treatment should be sufficient.

Annual white grubs (i.e., grubs with a 1-year life cycle: Japanese beetle, green June beetle, etc.):

A granular insecticide may be needed at planting if the average number of seeds damaged by annual white grubs in the baited wire traps is **5 percent** or more. **Note: unlike seedcorn maggot and wireworms, insecticidal seed treatments are not labelled for control of white grubs.**

Default

If you are unable to discern which pest is responsible for damaging the corn seeds in the baited wire traps, and if the average number of seeds damaged in the baited wire traps is **5 percent** or more, then a granular insecticide may be needed at planting to prevent serious stand loss.

Exceptions

Cropping situations in which the producer is encouraged to make an in-furrow, T-band, or banded over-the-row application of a granular insecticide when planting field corn (**and not just rely on an insecticidal seed treatment**) are the following:

a. when planting corn in old sod or pasture fields, because severe damage from wireworms may occur. Less frequently, damage may occur from true white grubs (i.e., *Phyllophaga* spp. with 2- to 3-year life cycles).

b. when a field is in continuous corn production, because of the potential for corn rootworm damage, and because the low rate of seed treatments do not control corn rootworms.

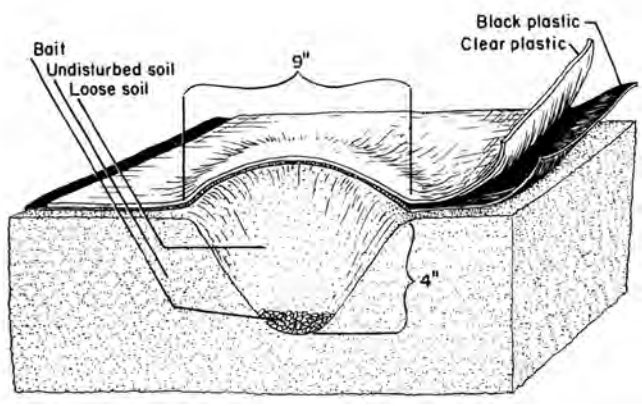

Bait Station (Cross Section)

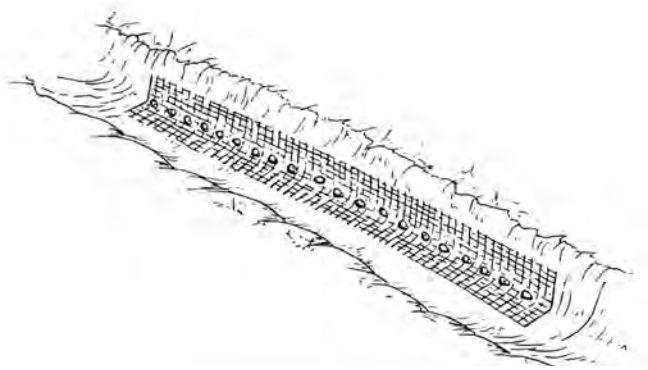

Baited Wire Trap

Corn Root Aphid

Corn root aphids are a sporadic pest of field corn in Virginia. Planting field corn no-till in fields with a history of corn root aphid problems can lead to serious root injury if a proper soil insecticide has not been applied at planting. Corn root aphids injure corn by piercing the roots with their stylet-like mouthparts and extracting the sap. The growth of infested corn plants often is stunted and, under severe infestations, may be arrested at a height of only 10 inches.

The ability of this aphid to infest corn roots is highly dependent upon certain species of ants commonly known as corn field ants. Shortly after germination, the ants begin carrying the aphids to the developing corn roots. Aphid numbers increase rapidly once in contact with the roots; females are capable of producing 40 to 50 live nymphs each, and generations can be as short as eight days during warm growing conditions. The ants benefit from this relationship by harvesting the droplets of honeydew produced by the aphids while feeding on the roots.

To determine if a field is at risk to corn root aphids, no-till fields should be scouted for the presence of anthills before planting because, unlike conventionally tilled fields, no-till fields are more likely to have established ant colonies. It should be kept in mind, however, that it is possible for a field to have anthills present without the presence of corn root aphids. Although no specific label reference to corn root aphids has been found among the list of insecticides currently available for use on field corn, application of a granular insecticide at planting to control wireworms or corn rootworms may alleviate a corn root aphid problem. In addition, two cultural practices which can play a role in minimizing corn root aphid infestations are deep tillage every other year to weaken ant colonies, and crop rotation to prevent the buildup of large ant and aphid populations.

Billbug

The southern corn billbug and maize billbug are known to occur throughout the coastal plain of North Carolina and in the Tidewater Region of southeastern Virginia. Unlike other areas of Virginia, the relatively higher organic matter content and poorer drainage characteristics of the soils in southeastern Virginia are two factors considered favorable to billbug infestations.

Both adult and immature stages of billbugs damage corn seedlings. Adult billbugs chew into the side of corn seedlings and feed on the inner plant tissue. Eggs are deposited by females within the feeding cavity and hatch in 4 to 15 days. The legless larvae feed in and around the taproot for several weeks. There is only one generation per year. Damaged seedlings which survive infestation typically are stunted, or otherwise deformed, and may exhibit excessive suckering and rows of transverse holes on the leaves.

Rotation is considered the least expensive and most effective method of controlling billbug infestations provided that corn is rotated about 0.25 mile from its previous location. When rotation is not possible, it is suggested that border rows and volunteer clumps of corn be inspected for billbug infestations. If an insecticide is to be used to control billbugs, it should be applied when billbugs are first observed or at the first indication of feeding damage.

Table 4.14 - Preemergence Use of Insecticides to Control Billbugs

Note: at-plant granular insecticide applications are not considered to be as effective as postemergence applications for controlling billbugs.

Insecticide (Formulation)	Amount active ingredient per 1,000 row ft	Amount product per 1,000 row ft	Time limits: days before harvest	Remarks
chlorpyrifos (Lorsban 15G)	1.2-2.4 oz	8.0 oz	35 grain, 14 silage, 14 grazing	Apply at planting in a band or T- band. Do not apply in-furrow.
clothianidin (Poncho 1250)	1.25 mg AI/ kernel	5.64 oz/80,000 seeds	–	Product is usually applied by manufacturer to seed upon request of grower at the time seed is ordered. Avoid breathing dust and contact with skin. Follow up foliar sprays may be needed under heavy pest pressure.
terbufos (Counter 20G SmartBox®)	0.9-1.2 oz	4.5-6.0 oz	30	**RESTRICTED USE.** Apply at planting in a 7-inch band over the row, in front of or behind the presswheel and lightly incorporate. Can also be applied in-furrow. **If application is made at planting, do not make postemergence or cultivation time treatments of Counter.** Use of Accent or Beacon herbicides following Counter applications may result in crop damage.
thiamethoxam (Cruiser 5FS)	1.25 mg AI/ kernel	5.64 oz/80,000 seeds	—	See previous remarks.

Table 4.15 - Postemergence Use of Insecticides to Control Billbugs

Insecticide (Formulation)	Amount active ingredient per 1,000 row ft	Amount product per 1,000 row ft	Time limits: days before harvest	Remarks
chlorpyrifos (Lorsban 4E)	1.0 lb/A	2.0 pt/A	35 grain, 14 silage, 14 grazing	Apply with sufficient water to ensure a minimum spray volume of 20-40 gal/A and 40 psi by ground. On corn less than 6 inches tall, apply spray in a 9-12 inch wide band over the row. On corn over 6 inches tall, apply the insecticide spray using drop nozzles directed at the base of the plant.

Cutworm

Cutworm Sampling/Decision Making

Late-planted, minimum-till fields with heavy spring weed growth on poorly drained soils are the most likely to encounter cutworms. Corn fields should be checked twice a week from the spike through the 5th-leaf stage. Leaf feeding is the first sign that cutworms are present. Look for small, irregular holes in leaves and cut plants. Note any leaf feeding that may have resulted from cutworms too small to cut plants and check these areas again in 24 to 48 hours. If cutworms are present, examine at least 10 sets of 20 plants throughout the field and record the percentage of cut or damaged plants. At the same time, look under clods and dig 1 to 2 inches deep around the bases of damaged plants to find cutworms. Record the average size and number of cutworms.

As a general guideline, before the 3rd- to 5th-leaf stage, a rescue treatment should be applied if 10% or more of the young plants show fresh leaf feeding and cutworms are present. At the 3rd- to 5th-leaf stage, treatment should be applied if 5% of the plants are cut and there are 4 or more cutworms per 100 plants.

Table 4.16 - Preemergence Use of Insecticides to Control Cutworms

Insecticide (Formulation)	Amount active ingredient per acre	Amount product per acre	Time limits: days before harvest	Remarks
Optimum® AcreMax™ 1				Product allows growers to reduce their corn rootworm refuge by placing it in the bag. An in-the-bag product that contains 90% of a Pioneer® brand hybrid with Herculex® XTRA (CRW/CB/LL/RR2) insect protection, and 10% of a Pioneer hybrid – same genetic family – with the Herculex 1 trait (CB/LL/RR2), which serves as the corn rootworm refuge. AcreMax, or some other suitable corn borer refuge corn, allows growers the flexibility to plant their corn borer refuge up to 1/2 mile away.
beta-cyfluthrin (Baythroid XL)	0.0065-0.0125 lb	0.8-1.6 oz	grain or fodder: 21 Green forages after last application: 0	**RESTRICTED USE.** Maximum product per 7-day interval: 2.8 oz/A. Maximum product per crop season: 11.2 oz/A. Maximum number of applications per season: 4. Minimum application volume (water): 10 gal/A by ground, 2 gal/A by air.
bifenthrin (Capture LFR)	0.04-0.16 lb	3.4-13.6 oz 0.2-0.78 oz/ 1000 row ft	—	**RESTRICTED USE.** Insecticide must be preplant incorporated (PPI) and can be tank mixed with PPI herbicides. Product should be applied no deeper than intended planting depth. Use of product is prohibited in all coastal counties.
chlorpyrifos (Lorsban 4E)	0.5 - 1.0 lb	1.0-2.0 pt	35 grain, 14 silage, 14 grazing	Broadcast – use minimum of 20 gal water/A.
chlorpyrifos (Lorsban 15G)	1.2 oz/1,000 row ft	8.0 oz/1,000 row ft	35 grain, 14 silage, 14 grazing	At plant band or T-band application.
chlorpyrifos zeta-cypermethrin (Stallion [3.03 lbs AI/gal prod])	—	3.75-11.75 oz	30 grain and storage, 60 forage	**RESTRICTED USE.** For grain, silage, seed. Make only one at-plant application in-furrow, band, or T-band treatment; minimum 4-inch band.
esfenvalerate (Asana XL)	0.03-0.05 lb	5.8-9.6 oz	21	**RESTRICTED USE.** Broadcast apply as necessary to maintain control.
lambda-cyhalothrin (Karate [2.08EC]) (Warrior II [2.08EC])	0.015-0.025 lb	0.96-1.60 oz	21	**RESTRICTED USE.** Apply by ground or air using sufficient water for full coverage. **Aerial application**: Use ≥2 gal water/A. Do not apply >0.48 pt/A/season. Do not apply >0.24 pt/A after silk initiation. Do not apply >0.12 pt/A after milk stage.
permethrin (Ambush 25WP)	0.1-0.2 lb	6.4-12.8 oz	30 grain and fodder (stover), 0 forage	**RESTRICTED USE.** Apply from 5 days before planting up to emergence. Band or Broadcast—use minimum 10 gal finished spray/A by ground or 2 gal/A by air.

Table 4.16 - Preemergence Use of Insecticides to Control Cutworms (cont.)

Insecticide (Formulation)	Amount active ingredient per acre	Amount product per acre	Time limits: days before harvest	Remarks
permethrin (Pounce 25WP)	0.1-0.2 lb	4.0-8.0 oz	30 grain and fodder (stover), 0 forage	**RESTRICTED USE.** See previous remarks.
tefluthrin (Force 3G)	0.12-0.15 lb	3.0-4.0 oz/1,000 row ft	—	**RESTRICTED USE.** Apply at planting in a 7-inch band over the row, in front of or behind the presswheel. Do not apply as either a band or T-band unless the granules can be incorporated into the top 1 inch of soil using tines, chains, or other suitable equipment. Rotational crops may be planted 30 days after application.
zeta-cypermethrin (Mustang Max)	0.001 lb	0.16 oz/1,000 row ft	30 grain and stover, 60 forage	**RESTRICTED USE.** Apply as in-furrow, band, or T-band, using a minimum 4-inch band.

Table 4.17 - Postemergence Use of Insecticides to Control Cutworms

Insecticide (Formulation)	Amount active ingredient per acre	Amount product per acre	Time limits: days before harvest	Remarks
beta-cyfluthrin (Baythroid XL)	0.0065-0.0125 lb	0.8-1.6 oz	grain or fodder: 21 Green forages after last application: 0	**RESTRICTED USE.** Maximum product per 7-day interval: 2.8 oz/A. Maximum product per crop season: 11.2 oz/A. Maximum number of applications per season: 4. Minimum application volume (water): 10 gal/A by ground, 2 gal/A by air.
bifenthrin (Capture LFR)	0.047-0.062 lb	4.0-5.3 oz	—	**RESTRICTED USE.** Insecticide must be preplant incorporated (PPI) and can be tank mixed with PPI herbicides. Product should be applied no deeper than intended planting depth. Use of product is prohibited in all coastal counties.
bifenthrin zeta-cypermethrin (Hero [1.24 lbs AI/ gal prod])	0.025-0.06 lb	2.6-6.1 oz	30 grain and stover, 60 forage	**RESTRICTED USE.** For grain, silage, and seed. Use of Hero on corn is prohibited in all coastal counties. Do not apply more than 0.4 lb AI/A/season for foliar applications. Do not graze livestock in treated areas or cut treated crops for feed within 30 days of last application. Do not apply if heavy rainfall is imminent.
carbaryl (Sevin XLR Plus)	2.0 lb	2.0 qt	0	For optimum control, apply 12-inch band over the row using sufficient water to ensure thorough coverage of treated plants. Broadcast— use minimum 20 gal water/A.
carbaryl (Sevin 4F)	2.0 lb	2.0 qt	0	See previous remarks.
chlorpyrifos (Lorsban 4E)	0.5-1.0 lb	1.0-2.0 pt	35 grain 14 silage 14 grazing	Use sufficient water to ensure thorough coverage of treated plants.

Table 4.17 - Postemergence Use of Insecticides to Control Cutworms (cont.)

Insecticide (Formulation)	Amount active ingredient per acre	Amount product per acre	Time limits: days before harvest	Remarks
chlorpyrifos zeta-cypermethrin (Stallion [3.03 lbs AI/ gal prod])	—	3.75-11.75 oz	30 grain and fodder (stover), 60 forage	**RESTRICTED USE.** Do not make second application of Stallion or any other product containing chlorpyrifos within 10 days of first application. Do not apply in tank mixes with Steadfast or Lighting herbicides.
esfenvalerate (Asana XL)	0.03-0.05 lb	5.8-9.6 oz	21	**RESTRICTED USE.** Use sufficient water to ensure thorough coverage of treated plants.
lambda-cyhalothrin (Karate [2.08EC]) (Warrior II [2.08EC])	0.015-0.025 lb	0.96-1.60 oz	21	**RESTRICTED USE.** Apply as required by scouting, usually at intervals of 7 or more days. Apply by ground or air using sufficient water for full coverage. **Aerial application**: use ≥2 gal water/A. Do not apply >0.48 pt/A/season. Do not apply >0.24 pt/A after silk initiation. Do not apply >0.12 pt/A after milk stage.
methomyl (Lannate LV) (Lannate SP)	 0.45 lb 0.45 lb	 1.5 pt 0.5 lb	3 forage 21 ears 21 fodder	**RESTRICTED USE.** Apply when insects first appear. Use sufficient water to ensure thorough coverage of treated plants.
permethrin (Ambush 25WP)	0.1-0.2 lb	6.4-12.8 oz	30 grain and fodder (stover), 0 forage	**RESTRICTED USE.** See previous remarks.
permethrin (Pounce 25WP)	0.1-0.2 lb	4.0-8.0 oz	30 grain and fodder (stover), 0 forage	**RESTRICTED USE.** Use minimum 2 gal finished spray/A by air or 10 gal/A by ground. Apply prior to brown silk stage.
zeta-cypermethrin (Mustang Max)	0.008-0.0175 lb	1.28-2.8 oz	30 grain and stover, 60 forage	**RESTRICTED USE.** Use minimum 10 gal water/A.

Armyworm

True Armyworm Sampling/Decision Making

No-till fields planted into a small grain cover crop, pastures, or weedy fields all have a high risk for armyworm infestation. Survey field edges where margins border small grains or large grassy areas and watch for damaged plants. If armyworm damage is seen, examine 20 plants at each of 5 locations within the field and record the percentage of damaged plants, the average size, and the severity of injury.

Armyworms usually migrate from small grains starting in late May. Spot treatments may be warranted if infestations are confined to small areas. Control for armyworms is recommended if 35 percent or more of the plants are infested and 50 percent or more defoliation is seen on the damaged plants, provided that larvae average less than 0.75 inch long. Worms greater than 1.25 inches in length usually have completed their feeding.

Table 4.18 - Preemergence Use of Insecticides to Control Armyworms

Insecticide (Formulation)	Amount active ingredient per acre	Amount product per acre	Time limits: days before harvest	Remarks
Optimum® AcreMax™ 1				Product allows growers to reduce their corn rootworm refuge by placing it in the bag. An in-the-bag product that contains 90% of a Pioneer® brand hybrid with Herculex® XTRA (CRW/CB/LL/RR2) insect protection, and 10% of a Pioneer hybrid – same genetic family – with the Herculex 1 trait (CB/LL/RR2), which serves as the corn rootworm refuge. AcreMax, or some other suitable corn borer refuge corn, allows growers the flexibility to plant their corn borer refuge up to 1/2 mile away.
beta-cyfluthrin (Baythroid XL)	0.0125-0.022 lb	1.6-2.8 oz	grain or fodder: 21 Green forages after last application: 0	**RESTRICTED USE.** Effective against 1st and 2nd instars only. Maximum product per 7-day interval: 2.8 oz/A. Maximum product per crop season: 11.2 oz/A. Maximum number of applications per season: 4. Minimum application volume (water): 10 gal/A by ground, 2 gal/A by air.
bifenthrin (Capture LFR)	0.04-0.16 lb	3.4-13.6 oz 0.2-0.78 oz/1000 row ft	—	**RESTRICTED USE.** Insecticide must be preplant incorporated (PPI) and can be tank mixed with PPI herbicides. Product should be applied no deeper than intended planting depth. Use of product is prohibited in all coastal counties.
chlorpyrifos (Lorsban 4E)	0.5-1.0 lb	1.0-2.0 pt	35 grain, 14 silage, 14 grazing	Broadcast-use minimum of 20 gal water/A.
permethrin (Pounce 25WP)	0.1-0.2 lb	4.0-8.0 oz	30 grain and fodder (stover), 0 forage	**RESTRICTED USE.** Apply from 5 days before planting up to emergence. Band or Broadcast use minimum of 10 gal finished spray/A by ground or 2 gal/A by air.
permethrin (Ambush 25WP)	0.1-0.2 lb	6.4-12.8 oz	30 grain and fodder (stover), 0 forage	**RESTRICTED USE.** See previous remarks.
esfenvalerate (Asana XL)	0.03-0.05 lb	5.8-9.6 oz	21	**RESTRICTED USE.** Broadcast apply as necessary to maintain control.
lambda-cyhalothrin (Karate [2.08EC]) (Warrior II [2.08EC])	0.02-0.03 lb	1.28-1.92 oz	21	**RESTRICTED USE.** For control of small larvae only. Apply as required by scouting, usually at intervals of 7 or more days. Apply by ground or air using sufficient water for full coverage. **Aerial application**: use ≥2 gal water/A. Do not apply >0.48 pt/A/season. Do not apply >0.24 pt/A after silk initiation. Do not apply >0.12/A pt after milk stage.

Table 4.19 - Postemergence Use of Insecticides to Control Armyworms

Insecticide (Formulation)	Amount active ingredient per acre	Amount product per acre	Time limits: days before harvest	Remarks
Bacillus thuringiensis (Biobit WP)	—	0.5-2.0 lb	0	Make initial application when economically-damaging populations exist. Applications must be made to early instars — repeat as necessary.
Bacillus thuringiensis (Javelin WG)	—	0.5-1.5 lb	0	See previous remarks.
beta-cyfluthrin (Baythroid XL)	0.0125-0.022 lb	1.6-2.8 oz	grain or fodder: 21 Green forages after last application: 0	**RESTRICTED USE.** Effective against 1st and 2nd instars only. Maximum product per 7-day interval: 2.8 oz/A. Maximum product per crop season: 11.2 oz/A. Maximum number of applications per season: 4. Minimum application volume (water): 10 gal/A by ground, 2 gal/A by air.
bifenthrin (Capture LFR)	0.047-0.062 lb	4.0-5.3 oz	—	**RESTRICTED USE.** Insecticide must be preplant incorporated (PPI) and can be tank mixed with PPI herbicides. Product should be applied no deeper than intended planting depth. Use of product is prohibited in all coastal counties.
bifenthrin zeta-cypermethrin (Hero [1.24 lb AI/gal prod])	0.04-0.1 lb	4.0-10.3 oz	30 grain and stover, 60 forage	**RESTRICTED USE.** For grain, silage, and seed use. Use of Hero on corn is prohibited in all coastal counties. Do not apply more than 0.4 lb AI/A/season for foliar applications. Do not graze livestock in treated areas or cut treated crops for feed within 30 days of last application. Do not apply if heavy rainfall is imminent.
carbaryl (Sevin XLR Plus)	1.0-2.0 lb	1.0-2.0 qt	0	See previous remarks.
carbaryl (Sevin 4F)	1.0-2.0 lb	1.0-2.0 qt	0	See previous remarks.
chlorpyrifos (Lorsban 4E)	0.5-1.0 lb	1.0-2.0 pt	35 grain, 14 silage, 14 grazing	Use sufficient water to ensure thorough coverage of treated plants.
chlorpyrifos zeta-cypermethrin (Stallion [3.03 lbs AI/gal prod])	—	9.25-11.75 oz	30 grain and fodder (stover), 60 forage	**RESTRICTED USE.** Do not make second application of Stallion or any other product containing chlorpyrifos within 10 days of first application. Do not apply in tank mixes with Steadfast or Lighting herbicides.
esfenvalerate (Asana XL)	0.03-0.05 lb	5.8-9.6 oz	21	**RESTRICTED USE.** Use sufficient water to ensure thorough coverage of treated plants.
lambda-cyhalothrin (Karate [2.08EC]) (Warrior II [2.08EC])	0.02-0.03 lb	1.28-1.92 oz	21	**RESTRICTED USE.** For control of small larvae only. Apply as required by scouting, usually at intervals of 7 or more days. Apply by ground or air using sufficient water for full coverage. **Aerial application**: use ≥2 gal water/ A. Do not apply >0.48 pt/A/season. Do not apply >0.24 pt/A after silk initiation. Do not apply >0.12/A pt after milk stage.

Table 4.19 - Postemergence Use of Insecticides to Control Armyworms (cont.)

Insecticide (Formulation)	Amount active ingredient per acre	Amount product per acre	Time limits: days before harvest	Remarks
methomyl (Lannate LV) (Lannate SP)	 0.225-0.45 lb 0.225-0.45 lb	 0.75-1.5 pt 0.25-0.5 lb	3 forage 21 ears 21 fodder	**RESTRICTED USE.** Apply when insects first appear. Use sufficient water to ensure thorough coverage of treated plants.
permethrin (Pounce 25WP)	0.1-0.2 lb	4.0-8.0 oz	30 grain and fodder (stover), 0 forage	**RESTRICTED USE.** Use minimum 2 gal finished spray/A by air or 10 gal/A by ground. Apply prior to brown silk stage.
permethrin (Ambush 25WP)	0.1-0.2 lb	6.4-12.8 oz	30 grain and fodder (stover), 0 forage	**RESTRICTED USE.** Use minimum 2 gal finished spray/A by air or 10 gal/A by ground. Apply prior to brown silk stage.
zeta-cypermethrin (Mustang Max)	0.02-0.025 lb	3.2-4.0 oz	30 grain and stover, 60 forage	**RESTRICTED USE.** Use minimum 10 gal water/A.

Slugs and Snails

Slug, Snail Sampling/Decision Making

Slugs can become serious pests in no-till fields during spring periods of cool, wet weather. Fields with heavy layers of manure, crop refuse, or thick weed cover are at higher risk from slugs. Because slugs feed at night and hide during the day in the mulch and surface trash near the seedlings, they often are not suspected of being the cause of the shredded leaves on the young corn seedlings. Yet slugs can be found during the day by turning over clods of dirt and surface trash near the seedlings. It is suggested that samples be taken from the area around 5 plants in 10 locations of the field to determine the average number of slugs associated with each plant. Populations of 5 or more slugs around each plant at the spike through the 3rd-leaf stage may be economic, especially if injury is heavy, plant growth is slow, and cool, wet conditions prevail. During dry, warm weather, 10 or more slugs per plant may be tolerated. Also, corn seedlings that have reached the 3rd-leaf stage of growth generally are able to outgrow feeding damage by slugs.

Cultural practices which may help reduce slug populations include reduction in the use of manure, shift to conventional tillage practices for at least one season, and minimum tillage to reduce the amount of surface trash.

Table 4.20 - Postemergence Use of Insecticides to Control Slugs and Snails

Insecticide (Formulation)	Amount active ingredient per acre	Amount product per acre	Time limits: days before harvest	Remarks
metaldehyde (Deadline M-Ps)	0.4-1.6 lb	10.0-40.0 lb	0	For best results, apply product in evening. Especially beneficial if applied following rain or watering. It should be noted that most corn-producing states are suggesting an application rate of 12 to 15 lb/A, if banded over or along side the row after the plants have emerged. Recent Delaware field trials indicate good results against slugs using 10 lb Deadline M-Ps/A broadcast with a cyclone spreader. Spreader must be calibrated to deliver at least 5 pellets/sq ft. Slugs generally stop feeding in 2-3 hours and die within 2-3 days.

Table 4.20 - Postemergence Use of Insecticides to Control Slugs and Snails (cont.)

Insecticide (Formulation)	Amount active ingredient per acre	Amount product per acre	Time limits: days before harvest	Remarks
methomyl[1] (Lannate LV)	0.45 lb	1.5 pt	21	**RESTRICTED USE.** Maximum number of applications per season: 10. Maximum product per crop season: 7.5 pts. Apply at 5-7 day intervals to maintain control. Slugs mainly feed in the early evening, at night, or in cool morning hours. Slugs are most active when weather conditions are moist and cool. It is recommended to apply product in early evening through early morning when slugs are active and feeding.

Stalk Borer

Stalk Borer Sampling/Decision Making

Good weed control can help eliminate some stalk borer egg-laying sites, but overwintering eggs may be laid on fall-planted small grains such as rye. A postemergence insecticide application is suggested **only** if the larvae **have not bored** into the stalks. Given this restriction, a treatment may be warranted if more than 4, 6, or 10 percent of the plants at the 2nd-, 3rd-, or 4th-leaf stages exhibit signs of stalk borer feeding damage. Refer to sampling procedures for true armyworm.

An alternative strategy for managing stalk borer infestations is to apply a burndown herbicide **at least 10 days before** corn is planted. The slightly earlier burndown herbicide application means that a suitable alternative host (i.e., corn) will not be available to the stalk borer larva as it emerges from its herbicide-treated host. As a consequence of this action, the exposed larvae are subject to a much higher mortality rate from such factors as predation, starvation, and adverse environmental conditions.

Table 4.21 - Preemergence Use of Insecticides to Control Stalk Borers

Insecticide (Formulation)	Amount active ingredient per acre	Amount product per acre	Time limits: days before harvest	Remarks
DO NOT rely on a preemergence burndown herbicide and combination insecticide application to control stalk borer.				
beta-cyfluthrin (Baythroid XL)	0.0125-0.022 lb	1.6-2.8 oz	grain or fodder: 21 Green forages after last application: 0	**RESTRICTED USE.** Maximum product per 7-day interval: 2.8 oz/A. Maximum product per crop season: 11.2 oz/A. Maximum number of applications per season: 4. Minimum application volume (water): 10 gal/A by ground, 2 gal/A by air.
bifenthrin (Capture LFR)	0.04 lb	3.4 oz	—	**RESTRICTED USE.** Insecticide must be preplant incorporated (PPI) and can be tank mixed with PPI herbicides. Product should be applied no deeper than intended planting depth. Use of product is prohibited in all coastal counties.
bifenthrin (Capture LFR)	0.04-0.16 lb AI/A	3.4-13.6 oz/A	—	Apply 5- to 7-inch band (T-band) over open furrow or in-furrow with the seed. Maximum 0.1 lb/A/season as an at-plant application. Maximum 0.3 lb/A/season of at-plant plus foliar applications of other bifenthrin products. Use of Capture LFR is prohibited in all coastal counties.

Table 4.21 - Preemergence Use of Insecticides to Control Stalk Borers (cont.)

Insecticide (Formulation)	Amount active ingredient per acre	Amount product per acre	Time limits: days before harvest	Remarks
bifenthrin zeta-cypermethrin (Hero [1.24 lbs AI/ gal prod])	0.04-0.10 lb	4.0-10.3 oz	30 grain and stover, 60 forage	**RESTRICTED USE.** For grain, silage, and seed. Use of Hero on corn is prohibited in all coastal counties. Do not apply more than 0.4 lb AI/A/season for foliar applications. Do not graze livestock in treated areas or cut treated crops for feed within 30 days of last application. Do not apply if heavy rainfall is imminent.
chlorpyrifos (Lorsban 4E)	1.0 lb	2.0 pt	35 grain, 14 silage, 14 grazing	Apply approximately 11 days **after** application of Roundup herbicide or 3 to 5 days **after** complete burndown with Gramoxone (paraquat). **DO NOT** use Lorsban 4E in combination with a burndown herbicide for control of stalk borer.
chlorpyrifos zeta-cypermethrin (Stallion [3.03 lbs AI/ gal prod])	—	9.25-11.75 oz	30 grain and fodder (stover), 60 forage	**RESTRICTED USE.** For foliar use only. Do not make second application of Stallion or any other product containing chlorpyrifos within 10 days of first application. Do not apply in tank mixes with Steadfast or Lighting herbicides.
esfenvalerate (Asana XL)	0.03-0.05 lb	5.8-9.6 oz	21	**RESTRICTED USE.** Application must be made early in migration from grassy areas to corn, before stalk borers enter plants.
lambda-cyhalothrin (Karate [2.08EC]) (Warrior II [2.08EC])	0.02-0.03 lb	1.28-1.92 oz	21	**RESTRICTED USE.** Must be applied before larva bores into stalk. Apply as required scouting. Apply by ground or air using sufficient water for full coverage. **Aerial application**: use ≥2 gal water/A. Do not apply >0.48 pt/A/season. Do not apply >0.24 pt/A after silk initiation. Do not apply >0.12 pt/A after milk stage.
permethrin (Pounce 25WP)	0.1-0.2 lb	4.0-8.0 oz	30 grain and fodder (stover), 0 forage	**RESTRICTED USE.** Apply when or shortly before stalk borer larvae move into corn from surrounding weeds, grasses, or rye cover crop. Mowing or application of a burndown herbicide is suggested to initiate movement. Use minimum 2 gal finished spray/ac by air or 10 gal/A by ground. Apply prior to brown silk stage.
permethrin (Ambush 25WP)	0.1-0.2 lb	6.4-12.8 oz	30 grain and fodder (stover), 0 forage	**RESTRICTED USE.** See previous remarks.
zeta-cypermethrin (Mustang Max)	0.017-0.025 lb	2.72-4.0 oz	30 grain and stover, 60 forage	**RESTRICTED USE.** Use minimum 10 gal water/A.

Garden Symphylan

Garden Symphylan Sampling/Decision Making

Because of its sensitivity to low soil moisture, garden symphylans frequently will move up and down as much as 2 to 3 ft in the soil profile. Thus, it is possible to observe typical feeding symptoms of root hair pruning and purple leaves without garden symphylans being present. No sampling method is available. Treat only if field history indicates that heavy infestations are likely.

Table 4.22 - Postemergence Use of Insecticides to Control Garden Symphylan

Insecticide (Formulation)	Amount active ingredient per acre	Amount product per acre	Time limits: days before harvest	Remarks
terbufos (Counter 20G SmartBox®)	0.9-1.2 oz oz/1,000 row ft	4.5-6.0 oz oz/1,000 row ft	30	**RESTRICTED USE.** Apply at planting in a 7-inch band over the row, in front of or behind the presswheel and lightly incorporate. Can also be applied in-furrow. **If application is made at planting, do not make postemergence or cultivation time treatments of Counter.** Use of Accent or Beacon herbicides following Counter applications may result in crop injury.
chlorpyrifos (Lorsban 15G)	1.2 oz/1,000 row ft	8.0- oz/1,000 row ft	35 grain, 14 Silage, 14 grazing	Apply at planting in a 6- to 7- inch band over the row, in front of the presswheel and incorpo rate the granules into the top 1 inch of soil.

Western Corn Rootworm

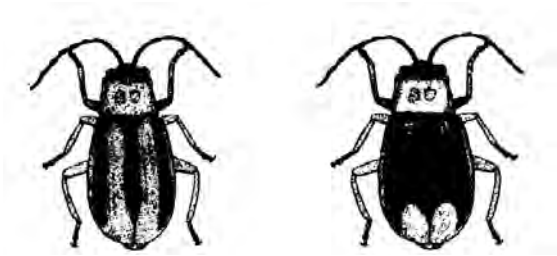

Fig. 4.5 Western Corn Rootworm Adults

Markings range from distinct black and yellow regions (left) to a 'blotchy' black (right).

There is one generation of western corn rootworm (WCR) per year. In late summer, adults lay eggs in soil **in cornfields**. Eggs overwinter in the soil and hatch the following spring. Larvae (grubs) immediately search for corn roots on which to feed, and then pupate in the soil. Adults (beetles) emerge from late June through August and fly to corn plants to feed and mate.

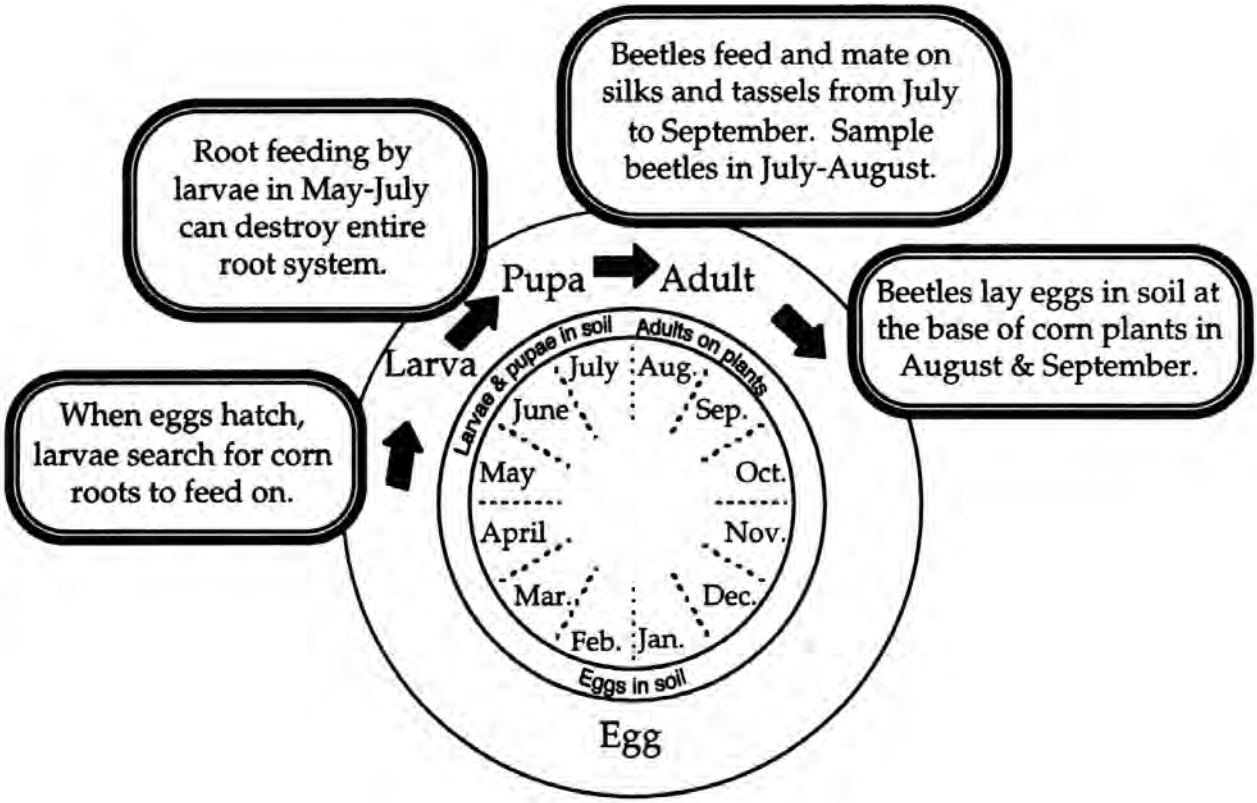

Fig. 4.6 Western corn rootworm life cycle in Virginia

Larvae feed almost exclusively on corn roots, so control is easily accomplished through crop rotation. However, many farmers do not have the option of rotating out of corn, thus the next best control measure is to apply a granular insecticide at planting. As the life cycle indicates, treatment of first year corn to control WCR is not necessary. Also, rootworm populations in subsequent years of continuous corn may not be large enough to warrant treatment. Economic damage thresholds for rootworm beetles have been developed by correlating beetle populations in a particular field with subsequent larval feeding damage occurring the following year.

Sampling

Western corn rootworm beetles should be sampled in July and August to determine whether a control measure is needed the following year. Two methods for scouting corn rootworm beetles are described here.

1. Yellow sticky card method

Place 4 x 6 inch Olson® (available from Olson Products, P. O. Box 1043, Medina, OH 44258) two-sided yellow sticky cards (traps) in cornfields starting in early July. Use the table below to determine how many traps to install. Place traps about 300 feet apart and at least 100 feet in from all field edges. Place a series of traps along the same corn row. When approaching the field edge, cross over about 30 rows and place another series of traps along a row until the entire field is covered. Use flags to mark the location of each trap. Use continuous flagging (forestry tape) when crossing rows and to mark the start of the trap line. Attach traps to corn plants at a height of about 4 feet. Break off any leaves on the plant and adjacent plants that could possibly stick to a trap. Monitor the traps every 9 to 10 days, recording the number of western corn rootworm beetles on each trap. At each site remove the release paper from the unused side of the trap and re-install the trap on the corn stalk with the fresh side exposed. Install new traps every other visit.

Table 4.23 - Determining the number of traps to place in a field

Field Size (Acres)	Number of Traps per Field
1 to 5	3
6 to 10	6
11 to 15	9
16 to 20	13
21 to 25	16
26 to 30	19
31 to 35	23
36 to 40	26
41 to 45	30
46 to 50	34
51 to 55	37
56 to 60	40

Decision Making

After counting the rootworm beetles on all traps, determine the average number of beetles per trap per week using the following formula:

Average beetles per trap per week = *Total Beetles ÷ No. of usable traps ÷ No. of days since last sampled x 7*

If a field has 20 or more rootworm beetles per trap per week, that field is above threshold and should be rotated out of corn or treated with a granular insecticide at corn planting next year for rootworm control. Once a field exceeds the threshold there is no need to scout it again this year.

If trap catch never reaches 20 beetles per trap per week, the field is below threshold and no treatment is recommended for rootworm control the following year. Scouting can be discontinued if trap counts decline for three consecutive sampling periods.

2. Ear zone count method

Survey fields 4 or 5 times from the second week in July through the third week in August to estimate the number of western corn rootworm beetles in the field. Count the corn rootworm beetles in the ear zone of 50 corn plants throughout each field. The ear zone is the area from the upper surface of the leaf just below the ear to the lower surface of the leaf just above the ear, and includes the ear and ear leaf. Calculate the average number of beetles per ear zone. When scouting fields that have been in corn more than one year, an average count of 1.0 beetle or more per ear zone indicates that a granular insecticide should be applied if the field is to be planted in corn the following year. When scouting first year corn, control for rootworms the following year if the average count is 0.75 beetles or more per ear zone, because primarily egg-laying females migrate to new cornfields.

Syngenta recently received EPA registration for two trait stacks:

Agrisure Viptera® 3220 E-Z Refuge® ™ trait stack offers dual modes of action for control of multiple above-ground lepidopteran pests and corn borer.

Agrisure® 3122 E-Z Refuge trait stack is intended for use in areas where corn rootworm and lepidopteran pest management are primary concerns.

What the two products have in common: Products feature 5 percent blended refuge in a bag for convenience and easy compliance, glyphosate tolerance, and, in cotton-growing regions, you will need to plant a supplemental 20 percent refuge.

Table 4.24 - Western Corn Rootworm

Insecticide (Formulation)	Amount active ingredient per 1,000 row ft	Amount product per 1,000 row ft	Time limits: days before harvest	Remarks
bifenthrin Capture 1.15 G Capture LFR (see label for details)	0.006 lb 0.08-0.2	8.0 oz (8.7 lbs/ac) 0.39-0.98 oz (6.8-17.0 oz/ac)	30	**RESTRICTED USE.** Apply at planting in a 5- to 7-inch band over the row, in front of the press wheel. Granules must be incorporated into the top one inch of soil. Apply in-furrow only for light to moderate pest pressure. Do not apply to soil where there is greater than 30% cover of crop residue remaining.
terbufos (Counter 20G SmartBox®)	0.9-1.2 oz	4.5-6.0 oz	30	**RESTRICTED USE.** Apply at planting in a 7-inch band over the row, in front of or behind the press wheel and lightly incorporate. Can also be applied in-furrow. **If application is made at planting, do not make postemergence or cultivation time treatments of Counter.** Use of Accent or Beacon herbicides following Counter applications may result in crop injury.
tefluthrin (Force 3G)	0.12-0.15 oz	4.0-5.0 oz	–	**RESTRICTED USE.** Apply at planting in a 7-inch band over the row, in front of or behind the presswheel and incorporate the granules into the top 1 inch of soil. Can also be applied in-furrow. Rotational crops may be planted 30 days after application.
chlorpyrifos (Lorsban15G)	1.2 oz	8.0 oz	35 grain, 14 silage, 14 grazing	Apply at planting in a 6- to 7-inch band over the row, in front of or behind the presswheel and incorporate the granules into the top 1 inch of soil. Can also be applied in-furrow.
fipronil (Regent 4SC)	0.12 oz (min. 30-in rows)	0.24 oz	–	**RESTRICTED USE.** Make 1 in-furrow application at planting only. Apply in 1 gal water/A directly into the seed furrow. **Do not apply more than 0.13 lb AI/A or 4.2 fluid oz of Regent 4SC/A.**
clothianidin (Poncho 1250)	1.25 mg AI/ kernel	5.64 oz/80,000 seeds	–	Product is usually applied by manufacturer to seed upon request of grower at the time seed is ordered. Avoid breathing dust and contact with skin.
thiamethoxam (Cruiser 5FS)	1.25 mg AI/ kernel	5.64 oz/80,000 seeds	–	See previous remarks.

Table 4.25 - Bt proteins active against western corn rootworm

Protein*	Product	First Marketed
Cry3Bb1	YieldGard	2003
mCry3A	Agrisure	2006
Cry34/35Ab1	Herculex, Optimum	2005
eCry3.1Ab	Duracade	2014

*Resistance by western corn rootworm (WCR) to Bt hybrids expressing either the Cry3Bb1 or mCry3A protein has been documented in individual Midwestern cornfields since 2009.

In Virginia in 2014 and 2015 a corn rootworm Bt hybrid expressing the Cry3Bb1 protein experienced considerable root damage and lodging from WCR feeding. This was the first confirmed instance in Virginia of potential resistance by WCR to a rootworm Bt hybrid.

To preserve the efficacy of Bt traits against WCR:

Rotate out of corn every 3 to 4 years to break the corn rootworm life cycle.

Rotate mode of action by planting a hybrid with a different Bt trait or multiple Bt traits for rootworm, or plant a conventional hybrid with a soil insecticide.

Follow refuge compliance: A refuge of non-Bt corn is used to delay the development of resistance to the Bt toxin.

Corn Rootworm Resistance Management

(Adapted from Marlin Rice, Iowa State University.)

EPA requires companies to ensure that 20 percent of the planted acreage of Bt rootworm hybrids be set aside where non-Bt corn will be grown to serve as a refuge. These refuge acres will support populations of corn rootworm not exposed to the Bt protein and reduce the possibility of corn rootworm developing resistance to Bt corn. The corn rootworm population in the refuge will help prevent resistance development by cross-breeding with any insects that may emerge from the Bt cornfield. This resistance management strategy was developed as a condition of registration, and EPA requires monitoring and documentation to show these measures are followed.

The following information on refuge requirements was modified from a Monsanto publication, "YieldGard Rootworm Insect Resistance Management-2003 IRM Guide."

Refuge Requirements

On each farm, up to 80 percent of corn acres may be planted with Bt rootworm corn. Plant at least 20 percent of the corn acres to a corn refuge that does not contain a Bt technology for control of corn rootworms. The corn refuge can be treated for corn rootworm larvae and other soil pests with soil-applied, seed-applied, or foliar-applied insecticides. The corn refuge can be treated with a non-Bt insecticide to control late-season pests such as European corn borer; however, the Bt rootworm corn also must be treated. Corn refuge options include Bt corn borer hybrids, Roundup Ready corn, and conventional corn, but no other Bt product for corn rootworm management.

Plant the refuge within or adjacent to the Bt rootworm cornfield. The corn refuge can be separated by a ditch or farm road but not by another field. Adjacent refuge fields must be owned by or managed by the grower.

Refuge Planting Requirements

Any corn hybrid that does not contain a Bt technology for control of western or northern corn rootworm and is planted within or adjacent to the Bt rootworm field corn can serve as a refuge.

Plant a refuge on every farm where Bt rootworm corn hybrids are planted.

Plant the refuge at the same time as Bt rootworm corn.

Effectiveness of the refuge can be reduced if the plant stand and plant vigor are decreased. The result of fewer, less thrifty plants translates into fewer susceptible insects in the refuge.

Mixing non-Bt seed with Bt rootworm seed for use in the refuge is not permitted.

Plant the refuge and the Bt rootworm corn in fields with similar crop history. For example, if the field planted to Bt rootworm was corn the previous year, then the refuge also must be planted in a field that was planted to corn the previous year.

Refuge Configuration Options

The refuge on each farm may be arranged in a number of configurations. These options offer the flexibility to easily incorporate an effective corn refuge into farm operations.

Options include the following:

- Plant a corn refuge adjacent to each Bt rootworm cornfield.
- Plant a corn refuge as large strips or blocks within a Bt rootworm field.
- Split the planter to alternate at least 4 (preferably 6) consecutive rows of corn refuge with Bt rootworm corn.
- Plant field perimeters or end rows to a corn refuge.

Stacked Bt corn hybrids contains different Bt proteins that kill more than one pest, for example one Bt protein for above-ground feeders such as European corn borer plus another protein for Western corn rootworm. Below are refuge option guidelines for stacked Bt products, but also read the product use guides for help implementing a corn rootworm resistance management plan for your farm.

1. **Common refuge for both corn borers and corn rootworms in non-cotton-growing counties**. The common refuge must be planted with corn hybrids that do not contain Bt technologies for the control of corn rootworms or corn borers. The refuge area must represent at least 20% of the stacked Bt acres. It can be planted as a block adjacent to the stacked Bt field, perimeter strips, or in-field strips. If perimeter strips are implemented, the strips must be at least 4 (preferably 6) rows wide. If strips within the stacked Bt field are implemented, then at least 4 (preferably 6) consecutive rows could be planted. The common refuge can be treated with a soil-applied or seed-applied insecticide to control rootworm larvae and other soil pests. The refuge can also be treated with a non-Bt foliar insecticide for control of late season pests if pest pressure reaches an economic threshold for damage; however, if rootworm adults are present at the time of a foliar application, then the stacked Bt field must be treated in a similar manner.

2. **Separate refuge areas for corn borers and corn rootworm in non-cotton-growing counties**. Acceptable corn borer refuge options are either a non-Bt conventional corn hybrid or a Bt corn rootworm single stack hybrid. Unacceptable corn borer refuge options are Bt lepidopteran single stack hybrids that target corn borers, cutworms, corn earworm, or armyworms. The refuge must represent at least 20% of the grower's stacked Bt corn acres, and must be planted within a 1/2 mile of the stacked Bt field. The corn borer refuge can be treated with a soil-applied or seed-applied insecticide for corn rootworm larval control, or a non-Bt foliar-applied insecticide for corn borer control if pest pressure reaches an economic threshold for damage. The corn rootworm refuge must be planted with a non-Bt corn rootworm-protected hybrid, but can be planted with Bt hybrids that control corn borers. The corn rootworm refuge must represent at least 20% of the grower's stacked Bt corn acres and be planted as an adjacent block, perimeter strips, or in-field strips. The corn rootworm refuge can be treated with a soil-applied or seed-applied insecticide to control rootworm larvae and other soil pests. The refuge can also be treated with a non-Bt foliar insecticide for control of late season pests; however, if rootworm adults are present at the time of foliar applications then the stacked Bt field must be treated in a similar manner. Growers who fail to comply with the IRM requirements risk losing access to the product.

3. Common and separate refuges for Bt corn grown in cotton-growing counties must be 50% of the Bt acres.

Adapted from:
Sharlene R. Matten, Ph.D., IRM Team Leader
USEPA/OPP/BPPD (7511c), 1200 Pennsylvania Ave., NW, Washington D.C. 20460

European Corn Borer (ECB)

First Generation

The potential for first-generation damage in field corn during the whorl stage is impossible to predict prior to planting. The best strategy is to scout each field and apply a whorl application of a granular or liquid insecticide if the ECB infestation exceeds the treatment threshold (see Decision Making below). Historically, not all fields need to be treated with insecticides every year because statewide economic infestations have occurred in only 3 out of the last 22 years. Furthermore, many corn hybrids are able to tolerate moderate levels of leaf and stalk injury without economic yield loss. **Also, corn grown for silage rarely needs to be treated for ECB**.

The decision to treat a first generation ECB infestation should be based on the following two criteria: (1) the number of plants exhibiting fresh whorl feeding damage, and (2) the presence of live larvae. ECB mortality typically is very high during the first 3 to 5 days after egg hatch. Plant resistance, natural enemies, and adverse environmental conditions are major causes of ECB larval mortality.

Sampling Begin checking for whorl feeding damage when the plants with extended leaves are 17 inches. Randomly select 5 sets of 20 consecutive plants from throughout the field. Determine the percentage of plants that exhibit fresh whorl feeding. Note: newly hatched larvae feed on the leaves, causing a characteristic "window pane" or "shothole" type of damge that is readily visible as the whorl unrolls. In addition, dissect 2 infested plants from each sample of 20 plants and look for live larvae in the whorl of the stalk. Check weekly or more frequently.

Decision Making. Treatment is suggested if 80 percent or more of the plants exhibit whorl feeding damage and if 80 percent or more of the damaged plants (i.e., 8 out of the 10 dissected plants) have at least 1 live larva per plant.

Second Generation

Although second generation ECB are more likely to attack corn that has been planted late, all corn grown for grain should be scouted when plants with extended leaves are 17 to 24 inches.

Sampling. To assess the potential for economic damage, begin scouting for egg masses when second generation moths emerge and begin egg-laying. The presence of ECB moths in areas bordering a field can be used to indicate a likely infestation. To survey for these moths, walk along the grassy sides of the field and look for large numbers of moths flying when disturbed. However, if no other information is available, it is suggested that scouting for egg masses be initiated the last week of June and continued at 2 to 3 day intervals through the third week of July. Randomly select 5 sets of 20 consecutive plants from throughout the field. Count the number of egg masses found on each plant. ECB moths usually lay their eggs in masses on the undersides of leaves, 2 or 3 leaves below the ear; however, because they can be laid anywhere, it is suggested that every leaf be inspected for egg masses.

Decision Making. To reduce a potential economic loss from second generation ECB in field corn grown for grain, an insecticide treatment is warranted if 35 percent or more of the plants in the pre- to post-tasseling stage of development have at least 1 egg mass per plant.

General Guidelines for Use of Bt Corn in Virginia

The USEPA has identified specific cotton-growing counties in Virginia where corn growers who plant Bt corn hybrids for corn borers or other lepidopterous insects (such as cutworms, armyworms, etc.) and/or corn rootworms also must plant a 50 percent non-Bt corn refuge.

The Virginia counties subject to the 50 percent corn refuge requirement are: Dinwiddie, Franklin City, Greensville, Isle of Wight, Northampton, Southampton, Suffolk City, Surrey, and Sussex.

Most Bt corn borer hybrids on the market today are targeted at controlling the corn borers and corn rootworms. These pests are capable of causing serious damage to corn and are considered two of the most important insect pests of corn in the U.S. Annual costs associated with corn borer and corn rootworm management and crop loss across the U.S. are estimated at more than $2 billion.

What Is Bt Corn?

A Bt corn hybrid refers to a corn plant that has been genetically engineered to express a crystalline protein derived from a common soil bacterium, *Bacillus thuringiensis*. Although researchers have identified numerous strains of Bt proteins, only a handful have been incorporated into the current lines of commercial corn hybrids. Bt proteins are highly toxic to European corn borer and corn rootworm larvae. In general, Bt corn plants with the genetic events BT11 and MON810 (YieldGard) express the Bt protein throughout the plant tissue including the green tissue, silk, pollen, and kernels.

European Corn Borer Life Cycle

European corn borer is a moth that has two main generations per year in Virginia. It overwinters as a fifth instar larva inside pieces of corn stalks, and it has a host range of over 200 plant species. The main damage caused by corn borer larvae results from tunnels bored into the stalk about two weeks before silking. A cornfield that averages one or more tunnels per stalk can expect a yield reduction of about 5%. Despite the fact that it is relatively simple to scout for this pest during the growing season, few growers in Virginia actually do. Their main reasons for not scouting are based on years of observing low levels of stalk breakage and ear drop at harvest.

What Other Corn Pests Are Controlled by Bt Hybrids?

The events BT11 (Syngenta Seeds) and MON810 (Monsanto, YieldGard Corn Borer) provide good control of late-season corn earworm and fall armyworm. These events only provide partial control of armyworm. The event TC1507 (Pioneer/Dupont and Dow AgroSciences Herculex I Insect Protection) protects against black cutworm and fall armyworm, as well as European corn borer. The events MON863 (Monsanto, YieldGard Rootworm) and MIR604 (Sygenta, Agrisure) offers excellent protection from corn rootworms.

Pest Risk Philosophy

The inability to identify at planting which cornfields will be at risk of European corn borer infestation means that the decision to plant a Bt corn hybrid must depend on factors other than pest presence. From a grower's perspective, such factors might include:

1) A philosophy of general pest risk aversion

2) A field's previous pest history (marginal value at best for European corn borer)

3) An attempt to minimize buildup of corn earworm populations that might otherwise pose a threat to soybeans late in the season

4) A perceived indirect benefit of reducing mycotoxin infections associated with stalk tunneling and ear feeding insects

Unfortunately, clear-cut answers to the above scenarios, as well as others you may think of, are not available. Nevertheless, it is possible to develop reasonable guidelines for use of Bt corn hybrids in Virginia if the question is approached from the standpoint of pest potential and the economics of control.

Results of 1997-1999 Field Studies Conducted in Eastern Virginia

From 1997-1999, European corn borer damage was surveyed in 172 non-Bt cornfields in eastern Virginia, and the performance of selected Bt corn hybrids grown in eastern Virginia was evaluated. Details of these studies can be found in Virginia Cooperative Extension publication 424-031, *Virginia Corn Hybrid and Management Trials*, for each of the study years. For complete details, please consult the following URLs for 1997, 1998, and 1999, respectively: *http://www.ext.vt.edu/pubs/grains/424-031/424-031.html*; *http://www.ext.vt.edu/pubs/grains/424-031-98/424-031-98.html*; *http://www.ext.vt.edu/pubs/grains/424-031-99/424-031-99.html*; The following points summarize the results:

1. Of 172 surveyed fields, only 2% (3 fields) had exceeded the economic threshold for damage (i.e., one or more, >0.5-inch tunnels per stalk).

2. Three years of field tests in eastern Virginia under both irrigated and non-irrigated conditions, and in the absence of economic infestations of European corn borer, revealed that Pioneer 3394 (a non-Bt corn hybrid) consistently produced grain yields as good as or better than those of the Bt corn hybrids.

3. A multi-year doublecrop corn hybrid study showed that late-planted corn (i.e., corn planted after the first week in June) is at severe risk of European corn borer damage. Also, recent survey results of European corn borer damage in non-Bt cornfields of western Virginia were similar to those of surveys conducted in eastern Virginia. Of 78 surveyed fields, less than 8% (6 fields) had exceeded the economic threshold for damage.

General Guidelines for Planting Bt Corn Borer Hybrids in Virginia

1. Most corn (≥90%) planted timely in Virginia (i.e., from April to early May) will likely not realize an economic benefit from Bt corn because of the lack of European corn borer pressure early in the season.

2. It is strongly recommended that Bt corn be planted anywhere late-planted corn (i.e., corn planted mid- to late May or later) is grown in Virginia because of the increasing risk of corn borer damage.

EPA Refuge Requirements for Planting Bt Corn Hybrids

In corn growing areas where cotton is not grown, a maximum of **80% Bt corn acres** can be planted **if 20% of the remaining corn acres are planted to a non-Bt corn hybrid.** The non-Bt corn refuge can be located up to **1/2 mile** from the Bt corn field if it is not treated with any foliar insecticides for European corn borer. If there is a possibility that the refuge will be treated with insecticides for European corn borer, then the refuge needs to be within **1/4 mile** of the Bt corn field. Under no circumstances should sprayable Bt insecticides be applied to the non-Bt corn refuge.

In corn growing areas where cotton is also grown, a maximum of **50% Bt corn acres** can be planted **if 50% of the remaining corn acres are planted to a non-Bt corn hybrid.** The refuge must be located within **1/2 mile** of the Bt corn field, and if at all possible it should be placed within **1/4 mile** of the Bt corn field.

Acceptable Refuge Planting Schemes

1. Separate non-Bt corn fields within 1/4 to 1/2 mile (see above comments)
2. Large non-Bt corn strips or blocks within the Bt field
3. Split the planter to alternate at least 4 (preferably 6) consecutive rows of corn refuge with the Bt corn borer corn.
4. Planting pivot corners to non-Bt corn
5. Planting field perimeters or end rows to non-Bt corn

For details on YieldGard Plus resistance management plan for European corn borer and western corn rootworm go to the following: *http://www.pioneer.com/canada/crop_management/05YGPL.pdf* and review the "2005 YieldGard Plus Use Guide."

Syngenta receives EPA registration for two convenient refuge in a bag trait stacks featuring top performing insect control.

Agrisure Viptera® 3220 E-Z Refuge® ™ trait stack offers dual modes of action for control of multiple above-ground lepidopteran pests and corn borer.

Agrisure® 3122 E-Z Refuge trait stack is intended for use in areas where corn rootworm and lepidopteran pest management are primary concerns.

What the two products have in common: Products feature 5 percent blended refuge in a bag for convenience and easy compliance, glyphosate tolerance, and, in cotton-growing regions, you will need to plant a supplemental 20 percent refuge.

The traits will be available from Syngenta's Garst®, Golden Harvest® and NK® seed brands for the 2013 planting season.

Table 4.26 - European Corn Borer (ECB)

Insecticide (Formulation)	Amount active ingredient per acre	Amount product per acre	Time limits: days before harvest	Remarks
Optimum® AcreMax™ 1				Product allows growers to reduce their corn rootworm refuge by placing it in the bag. An in-the-bag product that contains 90% of a Pioneer® brand hybrid with Herculex® XTRA (CRW/CB/LL/RR2) insect protection, and 10% of a Pioneer hybrid – same genetic family – with the Herculex 1 trait (CB/LL/RR2), which serves as the corn rootworm refuge. AcreMax, or some other suitable corn borer refuge corn, allows growers the flexibility to plant their corn borer refuge up to 1/2 mile away.
Bacillus thuringiensis (Agree WG)	0.038-0.076 lb	1.0-2.0 lb	0	Apply when small, newly-hatched larvae are present and actively feeding. Use sufficient water for thorough spray coverage. Use high rate for heavy infestations.
Bacillus thuringiensis (Dipel 10G)	1.0 lb	10.0 lb	0	**First generation:** Make whorl application shortly after egg hatch and before larvae bore into the stalks. **Second generation:** Apply when egg-mass counts reach or exceed the economic threshold.
beta-cyfluthrin (Baythroid XL)	0.0125-0.022 lb	1.6-2.8 oz	grain or fodder: 21 Green forages after last application: 0	**RESTRICTED USE.** Application must be made prior to the larva boring into the plant. Maximum product per 7-day interval: 2.8 oz/A. Maximum product per crop season: 11.2 oz/A. Maximum number of applications per season: 4. Minimum application volume (water): 10 gal/A by ground, 2 gal/A by air.

Table 4.26 - European Corn Borer (ECB) (cont.)

Insecticide (Formulation)	Amount active ingredient per acre	Amount product per acre	Time limits: days before harvest	Remarks
bifenthrin zeta-cypermethrin (Hero [1.24 lb AI/gal prod])	0.04-0.1 lb	4.0-10.3 oz	30 grain and stover, 60 forage	**RESTRICTED USE.** For grain, silage, and seed. Use of Hero on corn is prohibited in all coastal counties. Do not apply more than 0.4 lb AI/A/season for foliar applications. Do not graze livestock in treated areas or cut treated crops for feed within 30 days of last application. Do not apply if heavy rainfall is imminent.
carbaryl (Sevin XLR Plus)	1.5-2.0 lb	1.5-2.0 qt	0	For optimum control, use minimum 3 gal water/A by air or 15 gal/A by ground.
carbaryl (Sevin 4F)	1.5-2.0 lb	1.5-2.0 qt	0	See previous remarks.
chlorpyrifos (Lorsban 15G)	0.9-1.2 oz/1,000 row ft	6.0-8.0 oz/1,000 row ft (band application) 5.0-6.5 lb (broadcast by air)	35 grain, 14 silage, 14 grazing	Uniformly broadcast granules over the plants by air or directly into whorls by ground. Do not exceed 2 applications/season. Do not graze or harvest for silage within 14 days of last treatment.
chlorpyrifos (Lorsban 4E)	0.5-1.0 lb	1.0-2.0 pt	35 grain, 14 silage, 14 grazing	**First generation:** Apply when 25 to 50% of plants show pinholefeeding or leaf-feeding scars. Ground applications should be directed into the whorl. **Second generation:** Apply when egg-mass counts reach or exceed the economic threshold. Do not graze or harvest for silage within 14 days of last treatment.
chlorpyrifos zeta-cypermethrin (Stallion [3.03 lbs AI/gal prod])	—	9.25-11.75 oz	30 grain and storage, 60 forage	**RESTRICTED USE.** For grain, silage, seed. Make only one at-plant application in-furrow band or T-band treatment; minimum 4-inch band.
fipronil (Regent 4SC)	0.12 oz (min. 30-in rows)	0.24 oz	—	**RESTRICTED USE.** For control of first generation only. Make 1 in-furrow application at planting only. Apply in 1 gal water/A directly into the seed furrow. **Do not apply more than 0.13 lb AI/ A or 4.2 fluid oz of Regent 4SC/A.**
esfenvalerate (Asana XL)	0.04-0.05 lb	7.8-9.6 oz	21	**RESTRICTED USE.** **First generation:** Apply when eggs are in blackhead stage or starting to hatch. Ground application suggested— use 20-30 gal carrier/A and direct spray to both sides of leaves. **Second generation:** Apply when eggs are in blackhead stage or starting to hatch. Good coverage above, below, and in the ear zone is essential.
lambda-cyhalothrin (Karate [2.08EC]) (Warrior II [2.08EC])	0.02-0.03 lb	1.28-1.92 oz	21	**RESTRICTED USE.** Must be applied before larva bores into stalk. Apply as required by scouting, usually at intervals of 7 or more days. Apply by ground or air using sufficient water for full coverage. **Aerial application**: use ≥2 gal water/A. Do not apply >0.48 pt/A/season. Do not apply >0.24 pt/A after silk initiation. Do not apply >0.12 pt/A after milk stage.

Table 4.26 - European Corn Borer (ECB) (cont.)

Insecticide (Formulation)	Amount active ingredient per acre	Amount product per acre	Time limits: days before harvest	Remarks
permethrin (Ambush 25WP)	0.1-0.2 lb	6.4-12.8 oz	—	**RESTRICTED USE.** See previous remarks.
permethrin (Pounce 1.5G)	0.1-0.15 lb	6.7-10.0 lb	—	**RESTRICTED USE.** Foliar use—direct granules into the whorl. Do not apply more than 0.4 lb AI/A after brown silk stage.
permethrin (Pounce 25WP)	0.1-0.2 lb	4.0-8.0 oz	—	**RESTRICTED USE.** Foliar spray—use minimum 1 gal finished spray/A by air or 10 gal/A by ground. Apply prior to brown silk stage.
zeta-cypermethrin (Mustang Max)	0.017-0.025 lb	2.72-4.0 oz	30 grain and stover, 60 forage	**RESTRICTED USE.** Use minimum 10 gal water/A. 60 forage

Flea beetle

Flea Beetle Sampling/Decision Making

Flea beetles rarely require control; however, treatment may be necessary if 10 or more flea beetles are present on young corn seedlings at the 1- to 2-leaf stage of growth. No preemergence treatments are recommended for control of flea beetles.

Table 4.27 - Flea Beetle

Insecticide (Formulation)	Amount active ingredient per acre	Amount product per acre	Time limits: days before harvest	Remarks
beta-cyfluthrin (Baythroid XL)	0.0065-0.0125 lb	0.8-1.6 oz	grain or fodder: 21 Green forages after last application: 0	**RESTRICTED USE.** Maximum product per 7-day interval: 2.8 oz/A. Maximum product per crop season: 11.2 oz/A. Maximum number of applications per season: 4. Minimum application volume (water): 10 gal/A by ground, 2 gal/A by air.
bifenthrin zeta-cypermethrin (Hero [1.24 lb AI/gal prod])	0.025-0.026 lb	2.6-6.1 oz	30 grain and stover, 60 forage	**RESTRICTED USE.** For grain, silage, and seed. Use of Hero on corn is prohibited in all coastal counties. Do not apply more than 0.4 lb AI/A/season for foliar applications. Do not graze livestock in treated areas or cut treated crops for feed within 30 days of last application. Do not apply if heavy rainfall is imminent.
carbaryl (Sevin XLR Plus)	1.0-2.0 lb	1.0-2.0 qt	0	Optimum timing and good coverage are essential to control.
carbaryl (Sevin 80S)	1.0-2.0 lb	1.25-2.5 lb	0	See previous remarks.
chlorpyrifos (Lorsban 4E)	0.5-1.0 lb	1.0-2.0 pt	35 grain, 14 silage, 14 grazing	Use sufficient water to ensure thorough coverage of treated plants.

Table 4.27 - Flea Beetle (cont.)

Insecticide (Formulation)	Amount active ingredient per acre	Amount product per acre	Time limits: days before harvest	Remarks
chlorpyrifos zeta-cypermethrin (Stallion [3.03 lbs AI/ gal prod])	—	9.25-11.75 oz	30 grain and storage, 60 forage	**RESTRICTED USE.** For grain, silage, seed. Make only one at-plant application in-furrow band or T-band treatment; minimum 4-inch band.
clothianidin (Poncho 600)	0.25-0.5 mg AI/ kernel	1.13-2.26 oz/80,000 seeds	—	Product is usually applied by manufacturer to seed upon request of grower at the time seed is ordered. Avoid breathing dust and contact with skin and eyes.
esfenvalerate (Asana XL)	0.03-0.05 lb	5.8-9.6 oz	21	**RESTRICTED USE.** Use sufficient water to ensure thorough coverage of treated plants.
lambda-cyhalothrin (Karate [2.08EC]) (Warrior II [2.08EC])	0.02-0.03 lb	1.28-1.92 oz	21	**RESTRICTED USE.** Apply as required by scouting. Apply by ground or air using sufficient water for full coverage. **Aerial application**: use ≥2 gal water/A.
methomyl (Lannate LV) (Lannate SP)	 0.225-0.45 lb 0.225-0.45 lb	 0.75-1.5 pt 0.25-0.5 lb	3 forage, 21 ears, 21 fodder	**RESTRICTED USE.** Use sufficient water to ensure thorough coverage of treated plants.
permethrin (Ambush 25WP)	0.1-0.2 lb	6.4-12.8 oz	30 grain and stover, 0 forage	**RESTRICTED USE.** See previous remarks.
permethrin (Pounce 25WP)	0.1-0.2 lb	4.0-8.0 oz	30 grain and stover, 0 forage	**RESTRICTED USE.** Use minimum 2 gal finished spray/A by air or 10 gal/A by ground.
terbufos (Counter 20G SmartBox®)	0.9-1.2 oz	4.5-6.0 oz	30	**RESTRICTED USE.** Apply at planting in a 7-inch band over the row, in front of or behind the press wheel and lightly incorporate. Can also be applied in-furrow. **If application is made at planting, do not make postemergence or cultivation time treatments of Counter.** Use of Accent or Beacon herbicides following Counter applications may result in crop injury.
zeta-cypermethrin (Mustang Max)	0.017-0.025 lb	2.72-4.0 oz	30 grain and stover, 60 forage	**RESTRICTED USE.** Use minimum 10 gal water/A. 60 forage

Grasshoppers

Grasshopper Sampling/Decision Making

Damage may occur during mid- to late-summer, especially during periods of drought. Examine fields next to pastures and other grassy areas where grasshoppers overwinter and develop. Treatment of these adjacent breeding sites before the young grasshoppers move into the corn field may reduce the area that must be sprayed later. Treatment of non-cropped areas is suggested when young grasshoppers reach 20 per square yard. Treat field margins when young grasshoppers enter the field from roadsides. Treatment of entire field is seldom necessary; however, field sprays may be justified when 5 to 8 grasshoppers per square yard are present during the silking period.

Table 4.28 - Grasshoppers

Insecticide (Formulation)	Amount active ingredient per acre	Amount product per acre	Time limits: days before harvest	Remarks
beta-cyfluthrin (Baythroid XL)	0.0165-0.022 lb	2.1-2.8 oz	grain or fodder: 21 Green forages after last application: 0	**RESTRICTED USE.** Maximum product per 7-day interval: 2.8 oz/A. Maximum product per crop season: 11.2 oz/A. Maximum number of applications per season: 4. Minimum application volume (water): 10 gal/A by ground, 2 gal/A by air.
bifenthrin zeta-cypermethrin (Hero [1.24 lb AI/gal prod])	0.025-0.026 lb	2.6-6.1 oz	30 grain and stover, 60 forage	**RESTRICTED USE.** For grain, silage, and seed. Use of Hero on corn is prohibited in all coastal counties. Do not apply more than 0.4 lb AI/A/season for foliar applications. Do not graze livestock in treated areas or cut treated crops for feed within 30 days of last application. Do not apply if heavy rainfall is imminent.
carbaryl (Sevin XLR Plus)	0.5-1.5 lb	0.5-1.5 qt	0	Use lower rate for nymphs on small plants. Use higher rate for mature grasshoppers.
carbaryl (Sevin 4F)	0.5-1.5 lb	0.5-1.5 qt	0	See previous remarks.
chlorpyrifos (Lorsban 4E)	0.25-0.5 lb	0.5-1.0 pt	35 grain, 14 silage, 14 grazing	Use sufficient water to ensure thorough coverage of treated plants.
dimethoate (Dimethoate 4EC)	0.5 lb	1.0 pt	14	Do not make more than 3 applications/year. Do not feed or graze within 14 days of last application.
esfenvalerate (Asana XL)	0.03-0.05 lb	5.8-9.6 oz	21	**RESTRICTED USE.** Apply as necessary to maintain control.
lambda-cyhalothrin (Karate [2.08EC]) (Warrior II [2.08EC])	0.02-0.03 lb	1.28-1.92 oz	21	**RESTRICTED USE.** Apply as required by scouting. Apply by ground or air using sufficient water for full coverage. **Aerial application**: use ≥2 gal water/A.
malathion (Malathion 8EC)	0.61 lb	0.61 pt	0	For young grasshoppers only. Spray may be applied by air or ground equipment. **Dilute application**: use 20 to 60 gal water/A. **Concentrate application**: use ≥5 gal water/A.
zeta-cypermethrin (Mustang Max)	0.017-0.025 lb	2.72-4.0 oz	30 grain and stover, 60 forage	**RESTRICTED USE.** Use minimum 10 gal water/A.

Spider Mite

Spider Mite Sampling/Decision Making

Spider mite populations often seem to explode as plants reach the grain-fill period, especially during extended hot, dry weather when the plants are stressed. Sprays applied for other insect pests during mid-summer can devastate the mite predator complex and thus may increase mite populations. If corn has not dented, treatment may be warranted if mite colonies are present along the midribs on the lower surfaces of one-third to one-half of the leaves on 50 percent of the plants. This can also be expressed as 15 to 20 percent of the total leaf area covered with mite colonies, and mites are beginning to colonize significant areas of the field.

Table 4.29 - Spider Mite

Insecticide (Formulation)	Amount active ingredient per acre	Amount product per acre	Time limits: days before harvest	Remarks
bifenthrin zeta-cypermethrin (Hero [1.24 lb AI/gal prod])	0.1 lb	10.3 oz	30 grain and stover, 60 forage	**RESTRICTED USE.** For grain, silage, and seed. Use of Hero on corn is prohibited in all coastal counties. Do not apply more than 0.4 lb AI/A/season for foliar applications. Do not graze livestock in treated areas or cut treated crops for feed within 30 days of last application. Do not apply if heavy rainfall is imminent.
dimethoate (Dimethoate 4EC)	0.33-0.5 lb	0.67-1.0 pt	14	Do not make more than 3 applications/year. Do not feed or graze within 14 days of last application.

Corn Leaf Aphid

Corn Leaf Aphid Sampling/Decision Making

Aphids are rarely a problem because infestations either build up too late, or they are controlled by beneficial insects such as lady beetles, lacewings, and parasitic wasps. Economic infestations may occur in mid-summer inside the leaf whorl surrounding the developing tassel. If treatment is considered it should be applied before 50 percent of the tassels emerge to be most effective. Unfold the whorl leaves of 20 plants at each of 5 locations in the field and note the severity of aphid colonies and any natural enemy activity. Treatment may be needed when 25 percent of the plants are heavily infested and natural enemy activity is low.

Table 4.30 - Corn Leaf Aphid

Insecticide (Formulation)	Amount active ingredient per acre	Amount product per acre	Time limits: days before harvest	Remarks
bifenthrin zeta-cypermethrin (Hero [1.24 lb AI/gal prod])	0.04-0.1 lb	4.0-10.3 oz	30 grain and stover, 60 forage	**RESTRICTED USE.** For grain, silage, and seed. Use of Hero on corn is prohibited in all coastal counties. Do not apply more than 0.4 lb AI/A/season for foliar applications. Do not graze livestock in treated areas or cut treated crops for feed within 30 days of last application. Do not apply if heavy rainfall is imminent.
chlorpyrifos zeta-cypermethrin (Stallion [3.03 lbs AI/gal prod])	—	9.25-11.75 pt	30 grain and storage, 60 forage	**RESTRICTED USE.** For grain, silage, seed. Make only one at-plant application in-furrow band or T-band treatment; minimum 4-inch band.

Table 4.30 - Corn Leaf Aphid (cont.)

Insecticide (Formulation)	Amount active ingredient per acre	Amount product per acre	Time limits: days before harvest	Remarks
malathion (Malathion 5EC)	1.0 lb	1.5 pt	0	Spray may be applied by air or ground equipment. **Dilute application**: use 20 to 60 gal water/A. **Concentrate application**: use ≥5 gal water/A.
lambda-cyhalothrin (Karate [2.08EC]) (Warrior II [2.08EC])	0.02-0.03 lb	1.28-1.92 oz	21	**RESTRICTED USE.** Suppression only. Apply as required by scouting, usually at intervals of 7 or more days. Apply by ground or air using sufficient water for full coverage. **Aerial application:** use ≥2 gal water/A. Do not apply >0.48 pt/A/season. Do not apply >0.24 pt/A after silk initiation. Do not apply >0.12 pt/A after milk stage.
zeta-cypermethrin (Mustang Max)	0.017-0.025 lb	2.72-4.0 oz	30 grain and stover, 60 forage	**RESTRICTED USE.** Use minimum 10 gal water/A.

Japanese Beetle

Japanese Beetle (Adult Feeding) Sampling/Decision Making

Damage is caused when the adult beetles prevent pollination by clipping silks during the early stage of silking. Begin scouting in mid-July before pollination to determine the number of beetles present and the potential for silk clipping damage. Pollination takes place during a period of about 36 hours. If the silks are wilted and/or have turned brown, pollination is complete and further silk feeding will not affect yields. Examine 20 plants in each of 5 locations in the field to determine the stage of pollination, the number of beetles per plant, and the percentage of plants with silks cut back to 0.5 inch or less. An insecticide application may be necessary if 50 percent of the plants have silks cut back to 0.5 inch or less, there is an average of more than 3 Japanese beetles per silk, and the plants are still pollinating.

Table 4.31 - Japanese Beetle

Insecticide (Formulation)	Amount active ingredient per acre	Amount product per acre	Time limits: days before harvest	Remarks
beta-cyfluthrin (Baythroid XL)	0.0125-0.022 lb	1.6-2.8 oz	grain or fodder: 21 Green forages after last application: 0	**RESTRICTED USE.** Maximum product per 7-day interval: 2.8 oz/A. Maximum product per crop season: 11.2 oz/A. Maximum number of applications per season: 4. Minimum application volume (water): 10 gal/A by ground, 2 gal/A by air.
bifenthrin zeta-cypermethrin (Hero [1.24 lb AI/gal prod])	0.04-0.1 lb	4.0-10.3 oz	30 grain and stover, 60 forage	**RESTRICTED USE.** For grain, silage, and seed. Use of Hero on corn is prohibited in all coastal counties. Do not apply more than 0.4 lb AI/A/season for foliar applications. Do not graze livestock in treated areas or cut treated crops for feed within 30 days of last application. Do not apply if heavy rainfall is imminent.
carbaryl (Sevin 80S)	1.0-2.0 lb	1.25-2.5 lb	0	Direct spray to fresh silks. If corn has been pollinated, there usually is no need for control. Most earworm and borer insecticides also will control Japanese beetles.

Table 4.31 - Japanese Beetle (cont.)

Insecticide (Formulation)	Amount active ingredient per acre	Amount product per acre	Time limits: days before harvest	Remarks
chlorpyrifos zeta-cypermethrin (Stallion [3.03 lbs AI/ gal prod])	—	9.25-11.75 oz	30 grain and storage, 60 forage	**RESTRICTED USE.** For grain, silage, seed. Make only one at-plant application in-furrow band or T-band treatment; minimum 4-inch band.
lambda-cyhalothrin (Karate [2.08EC]) (Warrior II [2.08EC])	0.02-0.03 lb	1.28-1.92 oz	21	**RESTRICTED USE.** Apply as required by scouting. Apply by ground or air using sufficient water for full coverage. **Aerial application**: use ≥2 gal water/A.
zeta-cypermethrin (Mustang Max)	0.017-0.025 lb	2.72-4.0 oz	30 grain and stover, 60 forage	**RESTRICTED USE.** Use minimum 10 gal water/A.

Fall Armyworm

Fall Armyworm Sampling/Decision Making

Damage occurs during mid-summer through harvest. Scout at least weekly all late plantings of both silage or grain corn before tassel emergence. Examine 20 consecutive plants at each of 5 locations in the field for the presence of whorl feeding. Larvae feed in the whorls of the plants causing a shredded or ragged appearance. They may burrow deep into the whorls and feed on the growing tips. Plants infested with fall armyworms often recover and grow normally without any significant effect on yield. Control at the whorl stage is usually not practical, particularly by air, and should not be attempted unless 75 percent of the plants exhibit whorl feeding and one or more larvae per plant are found. This threshold drops to 50 percent if 2 or more larvae per plant are found. Spray young plants when fall armyworms infest 15 to 20 percent of the plants.

Table 4.32 - Fall Armyworm

Insecticide (Formulation)	Amount active ingredient per acre	Amount product per acre	Time limits: days before harvest	Remarks
Optimum® AcreMax™ 1				Product allows growers to reduce their corn rootworm refuge by placing it in the bag. An in-the-bag product that contains 90% of a Pioneer® brand hybrid with Herculex® XTRA (CRW/CB/ LL/RR2) insect protection, and 10% of a Pioneer hybrid – same genetic family – with the Herculex 1 trait (CB/LL/RR2), which serves as the corn rootworm refuge. AcreMax, or some other suitable corn borer refuge corn, allows growers the flexibility to plant their corn borer refuge up to 1/2 mile away.
beta-cyfluthrin (Baythroid XL)	0.022 lb	2.8 oz	grain or fodder: 21 Green forages after last application: 0	**RESTRICTED USE.** Effective against 1st and 2nd instars only. Maximum product per 7-day interval: 2.8 oz/A. Maximum product per crop season: 11.2 oz/A. Maximum number of applications per season: 4. Minimum application volume (water): 10 gal/A by ground, 2 gal/A by air.

Table 4.32 - Fall Armyworm (cont.)

Insecticide (Formulation)	Amount active ingredient per acre	Amount product per acre	Time limits: days before harvest	Remarks
bifenthrin zeta-cypermethrin (Hero [1.24 lb AI/gal prod])	0.04-0.1 lb	4.0-10.3 oz	30 grain and stover, 60 forage	**RESTRICTED USE.** For grain, silage, and seed. Use of Hero on corn is prohibited in all coastal counties. Do not apply more than 0.4 lb AI/A/season for foliar applications. Do not graze livestock in treated areas or cut treated crops for feed within 30 days of last application. Do not apply if heavy rainfall is imminent.
carbaryl (Sevin XLR Plus)	1.0-2.0 lb	2.0-4.0 pt	0	Optimum timing and good coverage are essential for effective control.
carbaryl (Sevin 80S)	1.0-2.0 lb	1.25-2.5 lb	0	See previous remarks.
carbaryl (Sevin 4F)	1.0-2.0 lb	2.0-4.0 pt	0	See previous remarks.
chlorpyrifos zeta-cypermethrin (Stallion [3.03 lbs AI/ gal prod])	—	9.25-11.75 oz	30 grain and storage, 60 forage	**RESTRICTED USE.** For grain, silage, seed. Make only one at-plant application in-furrow band or T-band treatment; minimum 4-inch band.
methomyl (Lannate LV) (Lannate SP)	0.225-0.45 lb 0.225-0.45 lb	0.75-1.5 pt 0.25-0.5 lb	3 forage 21 ears 21 fodder	**RESTRICTED USE.** Lannate is considered the insecticide of choice for fall armyworm control. Apply at high rate in a minimum of 50 gal water/A. Spray must be directed into the whorls. Zero days to harvest for ears or 3 days to livestock grazing and feeding.
zeta-cypermethrin (Mustang Max)	0.02-0.025 lb	3.2-4.0 oz	30 grain and stover, 60 forage	**RESTRICTED USE.** Use minimum 10 gal water/A.

Small Grains

D. Ames Herbert Jr., Extension Entomologist, Tidewater AREC

Armyworm

Sampling

Armyworms should be detected while they are still small and easier to control. Check fields once each week starting the 2nd week of May. Examine first the debris and undergrowth on the ground surface along field margins and lodged areas. Small worms usually are found curled in a C-shape around the bases of the plants or under the debris and winter annual weeds. Armyworm frass or droppings also may be found on the soil surface. If small armyworms are present in these areas, obtain 10 to 20 worm counts at 50-pace intervals throughout the field. Note the average size of the worms, and whether any defoliation of the flag leaf and/or head clipping has occurred.

Decision Making

Parasites, diseases, insect predators, and birds usually keep armyworms under control in small grains. However, the effectiveness of these natural control agents is reduced during cool, wet springs and during growing seasons that follow years of drought.

As a general rule, barley should be treated if the number of armyworms exceeds one per linear foot between rows and most of the worms are greater than 0.75-inch long. In wheat, armyworms tend to nibble on the tips of kernels rather than clip heads; thus, populations of two to three worms per linear foot between rows are required to justify control. In high management wheat fields with 4-inch rows, treatment is recommended when armyworm levels exceed 3 to 5 per square foot of surface area, or per linear foot of row.

Note that wheat fields with mixed infestations of armyworms and sawfly caterpillars may need treatment even if worm counts of each pest do not exceed threshold levels. Also, if the grain crop is close to harvest or the majority of armyworms are longer than 1.5 inches and no head clipping has occurred, control may not be needed.

Table 4.33 - Recommended Insecticides for Armyworm Control

Insecticide (Formulation)	Amount active ingredient per acre	Amount product per acre	Time limits: days before harvest	Remarks
beta-cyfluthrin (Baythroid XL)	0.014-0.019 lb	1.8-2.4 oz	30	Do not graze or forage within 7 days.
chlorantraniliprole (Prevathon)	0.047-0.067 lb	14.0-20.0 oz	14	
chlorantraniliprole + lambda-cyhalothrin (Besiege)	0.05-0.078 lb	5.0-8.0 oz	30	**RESTRICTED USE.**
lambda-cyhalothrin (Kaiso 24WG) (Karate Z) (Warrior T)	 0.015-0.25 lb 0.02-0.03 lb 0.02-0.03 lb	 1.0-1.67 oz 1.28-1.92 oz 2.56-3.84 oz	 30 30 30	**RESTRICTED USE.** Do not apply more than 7.68 oz per acre per season. Wheat, wheat hay, and triticale only (Kaiso).
methomyl (Lannate LV) (Lannate SP)	 0.225-0.45 lb 0.225-0.45 lb	 0.75-1.5 pt 0.25-0.5 lb	 7 7	**RESTRICTED USE.** Do not graze or feed treated forage or hay to livestock within 10 days of last treatment.
microencapsulated methyl parathion (Penncap-M 2F)	0.5-0.75 lb	2.0-3.0 pt	15	**RESTRICTED USE.** Do not apply within 15 days of harvest or grazing.
spinetoram (Radiant SC)	0.023-0.047 lb	3.0-6.0 oz	21	Do not apply within 21 days of grain or straw harvest or within 3 days of forage, fodder, or hay harvest.

Table 4.33 - Recommended Insecticides for Armyworm Control (cont.)

Insecticide (Formulation)	Amount active ingredient per acre	Amount product per acre	Time limits: days before harvest	Remarks
spinosad (Blackhawk) (fall armyworm)	 0.025-0.074 lb 0.038-0.074 lb	 1.1-3.3 oz 1.7-3.0 oz	 21 21	Barley, buckwheat, oats, rye, triticale, wheat. Do not apply within 21 days of grain or straw harvest or within 3 days of forage, fodder, or hay harvest.
zeta-cypermethrin (Mustang Max)	 0.011-0.025 lb	 1.76-4.0 oz	 14	**RESTRICTED USE.** Wheat and triticale only.

Aphids

Grain Aphids at Tillering during Fall and Early Spring

Sampling

Grain aphids usually are held in check by their natural enemies, which include predators, parasites, and fungal diseases. When looking for aphids, it is important to recognize these natural enemies. Check grain fields each week starting in the fall or early spring if damage symptoms are evident. Infestations of aphids, particularly the greenbug and corn leaf aphid, occasionally build up in the fall. Symptoms are often first noticed as circular, yellow to brown spots with dead plants in the center. These spots may increase in size if the infestation is allowed to persist. To determine aphid activity on tillering grain, examine 20 sites throughout the field. Each site should consist of at least 5 linear feet of a row. Look at areas in the field that are showing plant stress symptoms. Aphid damage may be confused with moisture stress and/or nitrogen deficiency. Count the number of aphids on small plants and, if aphids are numerous, estimate the numbers per linear foot of a row of larger plants. Make a tally of the proportion of each species, particularly if greenbugs are present.

Decision Making

Treatment during the fall and early spring is not often necessary, but may be needed if infestations are threatening and the weather is unusually mild. Treatment is suggested if aphid counts exceed 150 per linear foot of row throughout the majority of the field and a low degree of beneficial insect activity is present. The greenbug can be the most destructive because of the toxic substances it secretes during feeding, so maintain close surveillance of fields if this aphid is the predominate species. One exception to the treatment threshold applies to wheat under intensive-management practices grown in Virginia, where the transmission of virus diseases by aphids is more prevalent. Treatment of intensive management wheat in Virginia is suggested based on the following threshold table:

Table 4.34 - Aphid Numbers

Time of year	Suggested number needed to treat
Fall	
Plant until spring growth begins	15-25/row-foot and yellowing areas scattered throughout the field.
Spring	
After spring growth resumes until hard-dough stage	100/row-foot, plants 3-6 inches tall 200/row-foot, plants 7-10 inches tall 300/row-foot, plants 11+ inches tall
Heading	20-25/grain head

Grain Aphids During the Grain Head Stage

Sampling

To determine aphid activity after the grain heads form, count the number of aphids on 100 heads throughout the field. Do not bias sampling by checking a few heads along the field margins where infestations usually are higher. Check for natural enemies at the same time that aphids are being counted. Aphids usually are clustered as colonies among bracts of the grain head and may move slightly when disturbed. Anything that actively moves when disturbed is probably a predator. Make a note of the ratio of predators to aphids.

Decision Making

The need for treatment depends primarily on the number of aphids, plant maturity, and the presence of natural enemies. Treatment during the grain head stage is generally considered when aphid numbers exceed more than 25 per head, especially if the crop is late, when cool weather is forecast and the natural enemy complex is lacking. Control is not advised if the crop is approaching the hard dough stage where there is good predator/parasite activity. Ratios of one or more predators to every 50 to 100 aphids are sufficient to achieve biological control.

Table 4.35 - Recommended Insecticides for Aphid Control

Insecticide (Formulation)	Amount active ingredient per acre	Amount product per acre	Time limits: days before harvest	Remarks
Seed Treatments				
imidacloprid (Gaucho XT) + metalaxyl + tebuconazole	 0.43 oz 0.03 oz 0.02 oz	 3.4 oz/cwt – –	 N/A – –	For wheat and barley. Do not graze or feed livestock on treated areas for 45 days after planting.
thiamethoxam (Cruiser 5FS)	0.47-0.83 oz	0.75-1.33 oz/cwt	N/A	For wheat and barley. 120-day plantback restriction on certain non-labeled crops.
Foliar Treatments				
beta-cyfluthrin (Baythroid XL)	0.014-0.019	1.8-2.4 oz	30	Do not graze or forage within 7 days.
chlorantraniliprole + lambda-cyhalothrin (Besiege)	0.058-0.098 lb	6.0-10.0 oz	30	**RESTRICTED USE.**
dimethoate (Dimethoate 4EC) (Dimethoate 2.67EC)	0.25-0.38 lb 0.25-0.33 lb	0.5-0.75 pt 0.75-1.0 pt	35 35	May not give acceptable control below 60°F. Do not apply within 14 days of grazing. Labeled for use on wheat only. Do not make more than 2 applications/season.
flupyradifurone (Sivanto)	0.09-0.137 lb	7.0-10.5 oz	21	
lambda-cyhalothrin (Karate Z) (Warrior T)	 0.02-0.03 lb 0.02-0.03 lb	 1.28-1.92 oz 2.56-3.84 oz	 30 30	**RESTRICTED USE.** Do not apply more than 7.68 oz per acre per season.
lambda-cyhalothrin + thiamethoxam (Endigo ZC)	0.023+0.03 lb - 0.031+0.04 lb	3.5-4.5 oz	30	**RESTRICTED USE.** Barley only. Do not allow livestock to graze in treated areas or harvest treated forage as feed for meat or dairy animals within 30 days after treatment.
Malathion 57 EC	1.0 lb	1.5 pt	7	Barley and wheat.
zeta-cypermethrin (Mustang Max)	0.02-0.025 lb	3.2-4.0 oz	14	**RESTRICTED USE.** Wheat and triticale only. Aids in control.

Cereal Leaf Beetle

Sampling

In many areas of the mid-Atlantic states, cereal leaf beetle eggs are heavily parasitized; thus, the larval stage is the best indicator of the potential yield loss. Once a week, make field inspections of wheat starting in early May and of spring oats starting by mid-May. Examine the flag leaf of wheat or the entire tiller of oats on 5 plants at each of 10 locations in the field. Count the number of larvae per flag leaf or tiller and note any defoliation.

Decision Making

A number of introduced parasites have been instrumental in keeping cereal leaf beetle populations below economic damage levels. Also, favorable planting dates may help suppress populations. Wheat planted early in the fall immediately after the Hessian fly-free date will be more advanced in growth the next spring than late-planted small grains. These early plantings will be less attractive to and more tolerant of the beetles when they peak in the spring. Cereal leaf beetle infestations on spring-planted oats cannot be avoided by means of planting date. Generally, barley is more advanced in maturity and thus less attractive when beetles are active.

Cereal leaf beetle infestations have become more widespread in the last few years. Adults move into small grain in late February and early March and deposit eggs which hatch into larvae. Larvae feed on grain stripping leaves of valuable photosynthetic tissue. New research indicated that damage to both flag and stem leaves reduces yield. New research showed that the best control is achieved if treatments are applied when larvae are small. Treatment should be considered if 25, total, eggs and small larvae are found on 100 stems. Of that 25, at least 1/2 should be larvae. Once wheat reaches the hard dough stage, beetle damage has little effect on yield and controls are not needed.

Table 4.36 - Recommended Insecticides for Cereal Leaf Beetle Control

Insecticide (Formulation)	Amount active ingredient per acre	Amount product per acre	Time limits: days before harvest	Remarks
beta-cyfluthrin (Baythroid XL)	0.008-0.014 lb	1.0-1.8 oz	30	Do not graze or forage within 7 days.
carbaryl				Apply to wheat only. No time limits on use as pasture or forage.
(Sevin XLR PLUS)	1.0 lb	2.0 pt	21	
(Sevin 80S)	1.25 lb	1.0 lb	21	
(Sevin 4F)	1.0 lb	2.0 pt	21	
chlorantraniliprole + lambda-cyhalothrin (Besiege)	0.058-0.098 lb	6.0-10.0 oz	30	**RESTRICTED USE.**
lambda-cyhalothrin + thiamethoxam (Endigo ZC)	0.023+0.03 lb - 0.031+0.04 lb	3.5-4.5 oz	30	**RESTRICTED USE.** Barley only. Do not allow livestock to graze in treated areas or harvest treated forage as feed for meat or dairy animals within 30 days after treatment.
lambda-cyhalothrin				**RESTRICTED USE.** Do not apply more than 7.68 oz per acre per season.
(Karate Z)	0.02-0.03 lb	1.28-1.92 oz	30	
(Warrior T)	0.02-0.03 lb	2.56-3.84 oz	30	
Malathion 57EC	1.0 lb	1.5 pt	7	Barley and wheat.
methomyl				**RESTRICTED USE.** Do not graze or feed treated forage or hay to livestock within 10 days of last treatment.
(Lannate LV)	0.225-0.45 lb	0.75-1.5 pt	7	
(Lannate SP)	0.225-0.45 lb	0.25-0.5 lb	7	
spinetoram (Radiant SC)	0.016-0.047 lb	2.0-6.0 oz	21	Do not apply within 21 days of grain or straw harvest or within 3 days of forage, fodder, or hay harvest.
zeta-cypermethrin (Mustang Max)	0.011-0.025 lb	1.76-4.0 oz	14	**RESTRICTED USE.** Wheat and triticale only.

Hessian Fly

The Hessian fly is not a major pest in the mid-Atlantic states because small grains normally are planted after the adult flies occur ("fly-safe" date). There are no insecticidal control measures that can be applied once the field becomes infested. Control is based entirely upon prevention. The important components of preventative fly management include: planting wheat only after the fly-safe planting date; destroying volunteer wheat plants by tillage methods; and planting resistant varieties, especially when planting very early. Check the following tables for the fly-safe dates in your area and contact your local Extension agent for information on resistant varieties. In Virginia, it is generally thought that the fly-safe date is around Oct. 20. However, flies can infest fields planted after that date by moving from volunteer grain plants in or from nearby fields.

Table 4.37 - Safe Planting Dates

Maryland counties					
Anne Arundel	Oct. 7	Dorchester	Oct. 9	Queen Anne's	Oct. 7
Allegany	Sept. 27	Frederick	Oct. 2	St. Mary's	Oct. 9
Baltimore	Oct. 2	Garrett	Sept. 20	Somerset	Oct. 10
Calvert	Oct. 8	Harford	Oct. 1	Talbot	Oct. 8
Caroline	Oct. 7	Howard	Oct. 2	Washington	Oct. 1
Carroll	Sept. 28	Kent	Oct. 6	Wicomico	Oct. 10
Cecil	Oct. 3	Montgomery	Oct. 4	Worcester	Oct. 11
Charles	Oct. 8	Prince George's	Oct. 7		
Delaware counties					
New Castle	Oct. 3	Kent	Oct. 8	Sussex	Oct. 10

Sorghum

Curt Laub, Research Associate, Virginia Tech

Greenbug Aphid

Sampling/Decision Making

A minimum of 40 randomly selected plants per field should be examined each week. Aphids are seldom evenly distributed across a field, so examine plants from all parts of the field. Avoid examining only field borders. Examine a greater number of plants in fields larger than 80 acres or if making a control decision is difficult.

Consider these factors when making a control decision: the estimates for aphids per plant, leaf damage, percentage parasitized aphids (mummies), and appropriate number of greenbug predators per plant.

Table 4.38 - Greenbug Aphid Control

Insecticide (Formulation)	Amount active ingredient per acre	Amount product per acre	Time limits: days before harvest	Remarks
malathion (Malathion 5EC = 57% EC)	0.94 lb	1.5 pt	7	
dimethoate (Dimethoate 4E)	0.25-0.5 lb	0.5-1.0 pt	28	48 hour restricted entry interval. Do not feed or graze within 28 days of last application. Make no more than 3 applications/ season. Do not apply after heading. **Ground application**: use 25 to 40 gal water/A. **Aerial application**: use ≥1 gal water/A.
chlorpyrifos (Lorsban 4E)	0.25-1 lb	0.5-2.0 pt	30	**RESTRICTED USE.** 24 hour restricted entry interval. Do not apply to sweet sorghum. To minimize chemical injury, do not apply Lorsban 4E to drought stressed grain sorghum within 3 days following irrigation or rain except where the product is applied in irrigation water.

Table 4.39 - Greenbug, English Grain Aphid, Bird Cherry-Oat Aphid Control

Insecticide (Formulation)	Amount active ingredient per acre	Amount product per acre	Time limits: days before harvest	Remarks
clothianidin (Poncho 600) Seed treatment	–	5.1-6.4 oz/100 lbs seed	–	Apply prior to planting to provide early season protection of seedlings. Avoid breathing dust and contact with skin and eyes. Poncho aids in control of greenbug, yellow sugarcane aphid, corn leaf aphid, English grain aphid, chinch bugs, white grubs, and wireworms.
thiamethoxam (Cruiser 5FS) Seed treatment	–	5.1-7.6 oz/100 lbs seed	–	Apply prior to planting to provide early season protection of seedlings. Avoid breathing dust and contact with skin and eyes. Cruiser aids in control of greenbug, yellow sugarcane aphid, corn leaf aphid, chinch bugs, fire ants, seedcorn maggot, and wireworms.
zeta-cypermethrin (Mustang Max)	0.02-0.025 lb	3.2-4.0 oz	14 grain and stover 45 forage	**RESTRICTED USE.** Minimum 10 days between applications. Do not apply >0.125 lb active ingredient/A/ season.

Table 4.40 - Treatment Thresholds for Greenbug Aphids

Plant size	When to treat
Emergence to about 6 in	Visible damage (plants beginning to yellow) with colonies of greenbugs on plants.
Larger plant to boot	Aphid colonies causing red spotting or yellowing of leaves. Before any entire leaves are killed.
Boot to heading	Before the death of one functional leaf.
Heading to hard-dough	When aphid numbers cause death of two normal-sized leaves.

If more than 20% of the greenbugs appear brown and swollen from being parasitized, and lady bird beetles, lacewing larvae, and syrphid fly larvae are active, then treatment generally is not necessary

Fall Armyworm (in Whorls)

Table 4.41 - Fall Armyworm (in Whorls) Control

Insecticide (Formulation)	Amount active ingredient per acre	Amount product per acre	Time limits: days before harvest	Remarks
beta-cyfluthrin (Baythroid XL)	0.010-0.022 lb	1.3-2.8 oz	14	**RESTRICTED USE.** Effective against first and second instars only. Maximum allowed per 10-day interval: 2.8 oz/a. Maximum allowed per crop season: 8.4 oz/a. Minimum application volume (water) is 10 GPA by ground and 2 GPA by air.
methomyl (Lannate LV) (Lannate SP)	 0.225-0.45 lb 0.225-0.45 lb	 0.75-1.5 pt 0.25-0.5 lb	 14 14	**RESTRICTED USE.** Fall armyworm can be difficult to control. Use ground application or application from helicopter only with high volume. Direct spray into whorls. Treat at 80% infestation (one worm/plant) or 40% infestation (multiple worms/plant). Treat when caterpillars are small.
lambda-cyhalothrin (Karate [2.08EC]) (Warrior II [2.08EC])	0.02-0.03 lb	1.28-1.92 oz	30	**RESTRICTED USE.** For control of first and second instars only. Apply as required by scouting, usually at intervals of 5 or more days. Apply by ground or air using sufficient water for full coverage. **Aerial application**: use ≥2 gal water/A. Do not apply >0.32 pt/A per season. In soft dough stage, do not apply >0.08 pt/A per season

Corn Earworm and Fall Armyworm

Sampling/Decision Making

Pre-headed sorghum: ragged shothole damage may be evident and at times 40-60% of plant will have dramatic heavy leaf damage, but worm control in the whorl stage is rarely justified. Late-whorl heading: begin to sample heads soon after flowering and continue until the soft dough stage is reached. Sample minimum of 200 plants at 20 sites within a small field of 10 acres or less. Treat only when larvae damage the head or the developing growing point and worms average 2 or more per head. Open-headed hybrids are damaged less than the compact or closed-headed types.

Sorghum Webworm Sampling

Decision Making

Make frequent head inspections when sorghum is beginning to flower and continue at 5-day intervals until hard dough. To examine heads for sorghum webworm, beat heads on a piece of paper or white handkerchief. Small larvae (less than 1/8-inch long) commonly overlooked during head inspections, will be detected with this method.

Application of an approved insecticide is suggested when five or more small larvae are found per head.

Table 4.42 - Corn Earworm, Fall Armyworm, and Sorghum Webworm (in Seed Heads)

Insecticide (Formulation)	Amount active ingredient per acre	Amount product per acre	Time limits: days before harvest	Remarks
beta-cyfluthrin (Baythroid XL)	0.010-0.022 lb	1.3-2.8 oz	14	**RESTRICTED USE.** For fall armyworm, product is only effective against first and second instars. Maximum allowed per 10-day interval: 2.8 oz/a. Maximum allowed per crop season: 8.4 oz/a. Minimum application volume (water) is 10 GPA by ground and 2 GPA by air.
carbaryl				Direct spray into forming heads for optimum insect control.
(Sevin XLR Plus)	1.0-2.0 lb	2.0-4.0 pt	21 grain, 14 grazing or silage	
(Sevin 4F)	1.0-2.0 lb	2.0-4.0 pt		
(Sevin 80 Solpak)	1.0-2.0 lb	1.25-2.5 lb		
lambda-cyhalothrin (Karate [2.08EC]) (Warrior II [2.08EC])	0.02-0.03 lb	1.28-1.92 oz	30	**RESTRICTED USE.** Apply as required by scouting, usually at intervals of 5 or more days. Apply by ground or air, using sufficient water for full coverage. **Aerial application**: use ≥2 gal water/A Do not apply >0.32 pt/A per season. In soft dough stage, do not apply >0.08 pt/A per season.
methomyl				**RESTRICTED USE.**
(Lannate LV)	0.225-0.45 lb	0.75-1.5 pt	14	48 hour restricted entry interval. Methomyl is product of choice for fall armyworm control. Apply at 50% bloom and 3 to 5 days later if needed. Use higher rates for serious infestations and for aerial applications. Threshold is 1 medium-to-large earworm or armyworm/head or 3 webworms/head.
(Lannate SP)	0.225-0.45 lb	0.25-0.5 lb	14	
zeta-cypermethrin (Mustang Max)	0.011-0.025 lb	1.76-4.0 oz	14 grain and fodder 21 forage/ silage	**RESTRICTED USE.** Minimum 10 days between applications. Do not apply >0.125 lb active ingredient/A/season.

Sorghum Midge Sampling

Decision Making

Adult midges do not damage sorghum, but midge larvae feed on and destroy developing seeds during the bloom period. To determine the presence of sorghum midge, fields should be inspected during midmorning until shortly after noon when midges are most active. During the sorghum bloom period, inspect fields daily or every other day to detect sorghum midges. Midge adults can be detected crawling on or flying about flowering grain heads. Use of a clear plastic bag as a trapping device quickly slipped over sorghum heads is helpful in detecting and counting midge adults. Windy weather conditions make midges more difficult to locate and sample accurately.

To determine the need for chemical control, an assessment of crop development, yield potential and midge density is required. Daily evaluation of these factors is encouraged during flowering.

Midge resistant sorghum hybrids are available commercially and, within limits, provide an additional management tool. At similar infestation levels of ovipositing midge females, resistant hybrids generally suffer one-third the damage that susceptible sorghum hybrids suffer. The antibiosis resistance increases the economic threshold level to five adults per head during flowering compared with one midge per head for susceptible hybrids. When adult midge densities exceed five per panicle during flowering in resistant hybrids, insecticide applications at 5-day intervals are required.

Table 4.43 - Sorghum Midge Control

Insecticide (Formulation)	Amount active ingredient per acre	Amount product per acre	Time limits: days before harvest	Remarks
beta-cyfluthrin (Baythroid XL)	0.008-0.01 lb	1.0-1.3 oz	14	**RESTRICTED USE.** Maximum number of applications per season is 6. Minimum application volume (water) is 10 GPA by ground and 2 GPA by air.
lambda-cyhalothrin (Karate [2.08EC]) (Warrior II [2.08EC])	0.015-0.02 lb	0.96-1.28 oz	30	**RESTRICTED USE.** Apply as required by scouting, usually at intervals of 5 or more days. Apply by ground or air, using sufficient water for full coverage. **Aerial Application**: Use ≥2 gal water/A. Do not apply >0.32 pt/A/season. In soft dough stage, do not apply >0.08 pt/A per season.
chlorpyrifos (Lorsban 4E)	0.25 lb	0.5 pt	30	**RESTRICTED USE.** 24 hour restricted entry interval. Apply when 30 to 50% of the seed heads are in bloom, repeat at 3-day intervals if needed. Do not apply to sweet sorghum. To minimize chemical injury, do not apply Lorsban 4E to drought stressed grain sorghum within 3 days following irrigation or rain except where the product is applied in irrigation water.
dimethoate (Dimethoate 4E)	0.125-0.25 lb	0.25-0.5 pt	28	48 hour restricted entry interval. Do not feed or graze within 28 days of last application. Make no more than 3 applications/ season. Do not apply after heading. **Ground application**: use 25 to 40 gal water/A. **Aerial application**: use ≥1 gal water/A.
methomyl (Lannate LV) (Lannate SP)	 0.225-0.45 lb 0.225-0.45 lb	 0.75-1.5 pt 0.25-0.5 lb	 14 14	**RESTRICTED USE.** 48 hour restricted entry interval. Apply at 50% bloom and 3 to 5 days later if needed.
zeta-cypermethrin (Mustang Max)	0.008-0.025 lb	1.28-4.0 oz	14 grain and fodder 21 forage/ silage	**RESTRICTED USE.** Minimum 10 days between applications. Do not apply >0.125 lb active ingredient/A/ season.

Soybeans

D. Ames Herbert Jr., Extension Entomologist, Tidewater AREC

Essentials of a Good Soybean Insect Pest Management Program

Know Soybean Insect Pests

It is very important that you know how to identify common soybean insect pests, and when they are most likely to occur. Different pest species have different economic thresholds and can require different insecticides for effective control. Various Virginia Cooperative Extension publications are available that can be useful in identifying insect pests. Also, consult your local Extension agent.

Know Pest Economic Thresholds

An economic threshold is the number of a particular insect pest that must be controlled to prevent economic loss to the crop. Thresholds have been established through many scientific studies. A treatment before a pest has reached its economic threshold usually will not pay and may cause an increase in other pests, requiring a second insecticide treatment.

Know What Crop Growth Stages Are Most Susceptible to Insect Attack

Leaf feeding insects can attack soybeans at almost any time during the season. Usually leaf feeding occurs continually throughout the season resulting in cumulative leaf damage. New research is showing that full-season and double-crop planting systems may react differently to this leaf damage. Soybean yield appears to be highly related to total leaf area, as measured by LAI (leaf area index). To achieve maximum yield potential, soybeans must develop an LAI of 3.5 to 4.0 or above. An easy way to visualize LAI is to think of a field with an LAI of 4 and having 4 acres of leaf area for every acre of ground. Any leaf canopy above that can be removed (for example: by insect leaf feeders) without reducing the yield potential. Most full-season plantings achieve larger leaf canopies and LAIs, regardless of the climatic conditions (temperature, cloud cover, or rainfall) during the season and are much more tolerant of leaf feeding. However, double-crop plantings do not always achieve as large a leaf canopy and therefore can be more sensitive to defoliation by insects. Until our research is completed, we feel that the "traditional" percent defoliation thresholds (40% prior to bloom, 15% from flowering to pod fill, 35% after pod fill) should only be applied to full-season plantings, or double-crop plantings that, because of good growing conditions, achieve large canopies. Be more conservative with double-crop plantings that do not achieve large canopies due to very late planting, dry conditions, poor soil, or other factors that result in less than optimal growth. With these plantings, allow lower levels of leaf loss before making insecticide treatments. Suggested thresholds for poor growth double-crop plantings are: 20% prior to bloom, 10% from flowering to pod fill, 15% after pod fill.

Know What Conditions Predispose Soybeans to Insect Injury

Corn earworm damage is typically most severe in fields with open leaf canopies, ones having flowers or young pods, or fields under some degree of drought or nematode stress. Therefore, soybeans planted late after small grain or planted in fields affected by drought or nematodes should be watched more closely. In dry seasons, all fields should be watched more closely.

Stay Informed of Current Pest Status

A corn earworm advisory is issued weekly to Virginia Cooperative Extension agents and to some local newspapers from August through September when most soybeans in Virginia are in stages susceptible to corn earworm attack. These advisories summarize current moth activity as monitored by a system of blacklight and pheromone traps. Earworm infestations, if they occur, will most likely follow peak moth activity periods by 8 to 10 days. Stay informed about the moth situation in your area and intensify your scouting efforts during critical periods.

Scout Field Regularly

Scouting (described below) is an essential part of successful economic management of insect pests. You must know what kind and how many insects are in your fields before making treatment decisions. **Do not apply insecticides unless you have confirmed that a real problem exists in your fields.**

Mexican Bean Beetle, Green Cloverworm, Bean Leaf Beetle

Sampling

Check for overwintered Mexican bean beetles as soon as the plants emerge, and first examine the field margins next to overwintering areas. Determine the extent of the infestation because feeding injury usually is not evenly distributed during the early season. Count the number of beetles over a 3-foot section of row in at least five locations in the infested area. Estimate the level of stand reduction if seedlings are killed, or estimate the percentage of defoliation on older plants. Bean leaf beetles also may cause damage to young soybean plants. These insects prefer tender plant tissue and leave rounded holes on leaves. This type of leaf injury is distinguishable from the lacelike injury caused by Mexican bean beetles.

Mexican bean beetle and green cloverworm infestations usually do not reach economic levels before August. Early-planted, full-season soybeans usually attract more colonizing beetles than do later fields. However, double-crop fields may become infested with adults that are moving out of maturing fields late in the season in search of more succulent foliage. Start scouting for both insect pests at least weekly during late July through September. Examine the entire field because larval populations may be localized. Check the undersides of leaves on plants and keep a tally of the number of egg masses, young larvae, older larvae, pupae, and adults. When possible, use a drop cloth to determine numbers in fields with wide rows. Estimate defoliation to the nearest 10 percent on 20 to 30 plants selected throughout the field. Each plant should be pulled up to examine the total leaf area; not just the upper canopy leaves.

When sampling, remember to check for diseased or parasitized larvae because the natural enemies play an important role in controlling these pests. Mexican bean beetles may be suppressed if you release parasitic wasps. The State Departments of Agriculture and grower cooperatives sponsor parasite release programs in several states in the mid-Atlantic area. These tiny parasites, released at carefully managed nursery plots each year, attack the older larvae and help to keep Mexican bean beetle populations below damaging levels. Clover worms are killed by a fungal disease which causes larvae to become hard, mummified, and covered with powdery white to light green spores. The presence of diseased worms usually signals the decline of the pest population.

Decision Making

Spray only when Mexican bean beetles and/or leaf-feeding caterpillars are actively feeding. At seedling, spray when defoliation reaches 40 percent with 2 to 3 beetles per plant throughout the field. At prebloom, spray when defoliation exceeds 30 percent, with 20 or more adults and/or larvae per 3-foot row. At bloom and podset, spray when defoliation exceeds 15 percent, with 16 or more adults and/or larvae per 3-foot of row. Consider the relative size and age composition of the population. If eggs and pupae of the Mexican bean beetle are the predominant stages it is advisable to wait until egg hatch or adult emergence before treating. Also consider the presence of natural controls, such as cloverworms infected with fungal disease or parasitized Mexican bean beetle larvae (mummies).

Table 4.44 - Recommended Insecticides for Mexican Bean Beetle, Green Cloverworm, and Bean Leaf Beetle Control

Insecticide (Formulation)	Amount active ingredient per acre	Amount product per acre	Time limits: days before harvest	Remarks
acephate (Orthene 97)	0.73-0.97 lb	0.75-1.0 lb	14	
beta-cyfluthrin (Baythroid XL) (Mexican bean and bean leaf beetle)	0.0125-0.022 lb	1.6-2.8 oz	45	**RESTRICTED USE.** Green forage may be fed 15 days after last application.
(green cloverworm)	0.0065-0.0125 lb	0.8-1.6 oz		
beta-cyfluthrin + imidacloprid (Leverage 360)	0.02-0.04 lb	2.8 oz	45	**RESTRICTED USE.**
bifenthrin (Brigade 2EC)	0.033-0.1 lb	2.1-6.4 oz	18	**RESTRICTED USE.**

Table 4.44 - Recommended Insecticides for Mexican Bean Beetle, Green Cloverworm, and Bean Leaf Beetle Control (cont.)

Insecticide (Formulation)	Amount active ingredient per acre	Amount product per acre	Time limits: days before harvest	Remarks
chlorantraniliprole (Prevathon)	0.047-0.066 lb	14.0-20.0 oz	21	
chlorpyrifos (Lorsban 4E) (bean leaf beetle) (green cloverworm) (Mexican bean beetle)	0.5-1.0 lb 0.25-0.5 lb 0.5-0.75 lb	1.0-2.0 pt 0.5-1.0 pt 1.0-1.5 pt	28	Do not feed or graze livestock on treated plants.
chlorpyrifos + lambda-cyhalothrin (Cobalt Advanced) (green cloverworm) (Mexican bean beetle and bean leaf beetle)	0.12 + 0.006 – 0.25 + 0.013 lb 0.31 + 0.016 – 0.74 + 0.038 lb	6.0-13.0 oz 16.0-38.0 oz	30	**RESTRICTED USE.**
esfenvalerate (Asana XL) (bean leaf beetle)	0.015-0.03 lb 0.03-0.05 lb	2.9-5.8 oz 5.8-9.6 oz	21	**RESTRICTED USE.** Do not feed or graze livestock on treated plants. Do not exceed 0.2 lb ai per acre per season. Extremely toxic to fish.
flubendiamide (Belt SC) (green cloverworm)	0.0625 lb	2.0 oz	14	
indoxacarb (Steward EC) (green cloverworm)	0.045-0.11 lb	4.6-11.3 oz	21	
lambda-cyhalothrin + chlorantraniliprole (Besiege)	0.016 +0.033lb- 0.026 + 0.052 lb	5.0-8.0 oz	30	**RESTRICTED USE**
lambda-cyhalothrin (Karate Z) (Warrior T)	0.015-0.025 lb 0.015-0.025 lb	0.96-1.6 oz 1.92-3.2 oz	45 45	**RESTRICTED USE**. Do not apply more than 7.68 oz per acre per season. Do not graze or harvest treated soybean forage, straw or hay for livestock feed.
Malathion 57EC	1.9 lb	3.0 pt	0	

Table 4.44 - Recommended Insecticides for Mexican Bean Beetle, Green Cloverworm, and Bean Leaf Beetle Control (cont.)

Insecticide (Formulation)	Amount active ingredient per acre	Amount product per acre	Time limits: days before harvest	Remarks
methomyl (Lannate LV) (green cloverworm and Mexican bean beetle)	0.12-0.225 lb	0.4-0.75 pt	14	**RESTRICTED USE.** Wait 3 days to feed or graze as forage or 7 days for hay. Up to 2 applications may be used.
(Lannate SP) (green cloverworm and Mexican bean beetle)	0.11-0.225 lb	0.125-0.25 lb	14	
(Lannate LV) (bean leaf beetle)	0.225-0.3 lb	0.75-1.0 pt	14	
(Lannate SP) (bean leaf beetle)	0.225-0.34 lb	0.25-0.375 lb	14	
methoxyfenozide (Intrepid 2F) (green cloverworm)	0.06-0.12 lb	4.0-8.0 oz	7 (hay/forage) 14 (seed)	
spinetoram (Radiant SC)	0.15-0.31 lb	2.0-4.0 oz	28	
spinosyn (Blackhawk) (green cloverworm)	0.025-0.05 lb	1.1-2.2 lb	28	Do not feed treated forage or hay to meat or dairy animals.
thiamethoxam + lambda-cyhalothrin (Endigo ZC) (bean leaf beetle)	0.064-0.072 lb	4.0-4.5 oz	30	**RESTRICTED USE.** Do not graze or harvest treated soybean forage, straw, or hay for livestock feed.
zeta-cypermethrin (Mustang Max)	0.0175-0.025 lb	2.8-4.0 oz	21	**RESTRICTED USE.** Do not graze or harvest treated soybean forage, straw, or hay for livestock feed.

Thrips

Sampling/Decision Making

Thrips rarely require treatment; however, early season injury to drought-stressed plants may occasionally reduce yields. Both nymphs and adults feed on the undersides of the leaves, causing small, silvery streaks and whitish or yellowish discoloration. Treatment may be required when injury appears on drought-stressed plants and more than eight thrips per leaflet are found. Treatment is not recommended in non-stressed fields because soybeans can tolerate thrips injury.

Table 4.45 - Recommended Insecticides for Thrips Control

Insecticide (Formulation)	Amount active ingredient per acre	Amount product per acre	Time limits: days before harvest	Remarks
acephate (Orthene 97)	0.24-0.49 lb	0.25-0.5 lb	14	
beta-cyfluthrin (Baythroid XL)	0.0065-0.0125 lb	0.8-1.6 oz	45	**RESTRICTED USE.** Green forage may be fed 15 days after last application.
bifenthrin (Brigade 2EC)	0.033-0.1 lb	2.1-6.4 oz	18	**RESTRICTED USE.**
chlorpyrifos + lambda-cyhalothrin (Cobalt Advanced)	0.31 + 0.016 – 0.74 + 0.038 lb	16.0-38.0 oz	30	**RESTRICTED USE.**
clothianidin + ipconazole + metalaxyl (Inovate - Nipsit Inside + Rancona Xxtra)	—	4.78 oz/cwt		Seed treatment. Do not graze or feed soybean forage and hay to livestock.
imidacloprid (Gaucho 600)	1.0 oz/cwt	1.6 oz/cwt	N/A	Seed treatment.
methomyl (Lannate LV) (Lannate SP)	0.225-0.3 lb 0.225-0.34 lb	0.75-1.0 pt 0.25-0.375 lb	14 14	**RESTRICTED USE.** Wait 3 days to feed or graze as forage or 7 days for hay. Up to two applications may be used per season.
thiamethoxam (Cruiser 5FS)	0.8 oz/cwt	1.28 oz/cwt	N/A	Seed treatment.
zeta-cypermethrin (Mustang Max)	0.02-0.025 lb	3.2-4.0 oz	21	**RESTRICTED USE.** Aids in control. Do not graze or harvest treated soybean forage, straw, or hay for livestock feed.

Potato Leafhopper

Sampling/Decision Making

Leafhoppers attack soybeans during late June through July but rarely reach population levels that affect yields. Using a standard 15-in sweep net, take five sweeps in each of five locations in the field. Count the number of leafhoppers and empty the net before proceeding to the next location. A single sweep consists of a swath of the net along the row in the top one-third of the plant in one direction only.

The symptoms of leafhopper injury include localized stippling, curling, and yellowing of leaf margins. Treatment is suggested when injury appears and infestations exceed four leafhoppers per sweep in stressed beans or eight leafhoppers per sweep in normal growing fields. Dense pubescent varieties are less susceptible.

Table 4.46 - Recommended Insecticides for Potato Leafhopper Control

Insecticide (Formulation)	Amount active ingredient per acre	Amount product per acre	Time limits: days before harvest	Remarks
acephate (Orthene 97)	0.49-0.97 lb	0.5-1.0 lb	14	
beta-cyfluthrin (Baythroid XL)	0.0065-0.0125 lb	0.8-1.6 oz	45	**RESTRICTED USE.** Green forage may be fed 15 days after last application.
bifenthrin (Brigade 2EC)	0.033-0.1 lb	2.1-6.4 oz	18	**RESTRICTED USE.**
chlorpyrifos + lambda-cyhalothrin (Cobalt Advanced)	0.31 + 0.016 – 0.74 + 0.038 lb	16.0-38.0 oz	30	**RESTRICTED USE.**
esfenvalerate (Asana XL)	0.015-0.03 lb	2.9-5.8 oz	21	**RESTRICTED USE.** Do not feed or graze livestock on treated plants. Do not exceed 0.2 lb ai per acre per season. Extremely toxic to fish.
lambda-cyhalothrin + chlorantraniliprole (Besiege)	0.016 + 0.033 lb – 0.026 + 0.052 lb	5.0-8.0 oz	30	**RESTRICTED USE.**
lambda-cyhalothrin (Karate Z) (Warrior T)	0.015-0.025 lb 0.015-0.025 lb	0.96-1.6 oz 1.92-3.2 oz	45 45	**RESTRICTED USE**. Do not apply more than 7.68 oz per acre per season. Do not graze or harvest treated soybean forage, straw or hay for livestock feed.
thiamethozam + lambda-cyhalothrin (Endigo ZC)	0.056-0.064 lb	3.5-4.0 oz	30	**RESTRICTED USE.** Do not graze or harvest treated soybean forage, straw or hay for livestock feed.
zeta-cypermethrin (Mustang Max)	0.0175-0.025 lb	2.8-4.0 oz	21	**RESTRICTED USE.** Do not graze or harvest treated soybean forage, straw, or hay for livestock feed.

Spider Mites

Sampling/Decision Making

Mite outbreaks usually are associated with hot, dry weather, which accelerates reproduction and development. During periods of high humidity and field moisture, a fungal disease can reduce populations but high temperatures can nullify these effects. Outbreaks also are associated with the application of certain insecticides that kill natural enemies and/or seem to make the soybean plant more nutritionally suitable for mites.

Check weekly for mites, starting in early July through August, especially during a hot, dry season. Concentrate on the field borders and look for the early signs of white stippling at the bases of the leaves. Do not confuse mite damage with dry weather injury, mineral deficiencies, and herbicide injury. If feeding injury is evident, press the undersides of a few damaged leaves on white paper to reveal any crushed mites. Determine the extent of the infestation and assess the level of injury by examining 20 to 30 plants in the infested area. Field infestations often show defoliated or injured plants at some localized point, with injury becoming less evident and extending in a widening arc into the field.

If isolated spots of mite activity are confined to the perimeter of the field, spot-treatment using ground equipment is recommended to prevent further spread of mites into the field. If the infestation is distributed throughout the interior of the field, treatment of the entire field is suggested if live mites are numerous (20 to 30 per leaflet) and more than 50 percent of the plants show stippling, yellowing, or defoliation over more than one-third of the leaves. If rains come, mite development and survival will decrease but may not drop to economic levels if heavy populations are developing under high temperatures.

Table 4.47 - Recommended Insecticides for Spider Mite Control

Insecticide (Formulation)	Amount active ingredient per acre	Amount product per acre	Time limits: days before harvest	Remarks
bifenthrin (Brigade 2EC)	0.08-0.1 lb	5.12-6.4 oz	18	**RESTRICTED USE.**
chlorpyrifos (Lorsban 4E)	0.25-0.5 lb	0.5-1.0 pt	28	**RESTRICTED USE**. May need second spray 4 to 5 days after initial treatment to control newly hatched mites. Do not graze or feed forage within 14 days after application. Use of vegetable oil as an adjuvant may improve control during hot weather.
dimethoate (Dimethoate 2.67EC) (Dimethoate 4EC)	0.5 lb 0.5 lb	1.5 pt 1.0 pt	21 21	Do not feed or graze within 5 days of the last application. Do not store above 90° F or below 32° F.

Corn Earworm

Sampling

Outbreaks often follow a midsummer drought, which causes the corn to ripen earlier and become less attractive to the moths. Female moths prefer to lay eggs in open-canopied, late-blooming soybean fields. Drought conditions also delay soybean maturity and prevent normal canopy growth, so peak moth activity is more coincidental with blooming of open-canopied fields.

Sampling for corn earworm should be done on a weekly basis from mid-August through September. If row spacing is 30 inches or greater any of the techniques described below can be used to sample for insects. Narrow-row beans, 21 inches or less, are best sampled with either the sweep net or rigid beat cloth. Concentrate on high-risk fields, such as ones that have open canopies, are late flowering, or were previously treated with insecticides.

Standard Beat or Ground Cloth

For each sample, place a standard 3-foot ground cloth on the ground between rows and shake the plants bordering both sides vigorously. The number of insects shaken onto the cloth will be the number per 6 feet of row, so divide by 6 to get the number per row-foot. About ten samples should be taken in each 40 acre area. Thresholds are based on number or earworms per row-foot.

Rigid Beat Cloth

The RBC works on the same principle as a standard beat cloth but the RBC is not flexible. Samples are taken by placing the sampler on its side between two rows of plants (plants cannot be seriously lodged) and beating or vigorously shaking adjacent plants into the sampler while it is leaned away from those plants at about a 45° angle. Two 7-inch rows are beaten and one 14-inch or 21-inch row is beaten per sample. Thresholds are based on the number of earworms ***per sample***.

Sweep Net

Each sample should consist of 15 net sweeps with a 15-inch diameter sweep net done continuously one after the other. Each sweep consists of swinging the net in one direction through the foliage so that the top of the net passes 2 or 3 inches below the tops of plants. Fifteen consecutive sweeps are done from one side to the other while walking down a middle row. Swing the net with enough force to dislodge insects into the net. If some leaves are not broken off and in the net after the sample, the sampler is not using enough force. Each swing should pass through the tops of 5, 3, or 2 rows in 7-inch, 14-inch, or 21-inch row-space plantings, respectively. After each sample, stop and count how many earworms are in the net. Thresholds are based on the number of earworms **per sample**.

Decision Making

Treatment is suggested if sample counts exceed economic thresholds. Thresholds are presented at the end of this chapter. Visit the website *http://soybeans.ces.ncsu.edu/thresholds/* for access to the new threshold calculator.

Table 4.48 - Recommended Insecticides for Corn Earworm Control

Insecticide (Formulation)	Amount active ingredient per acre	Amount product per acre	Time limits: days before harvest	Remarks
Bacillus thuringiensis (DiPel ES)	8.0-16.0 BCLUs	1.2 pts	0	For pyrethroid resistant corn earworms when tank-mixed with a pyrethroid at a labeled rate.
beta-cyfluthrin (Baythroid XL)	0.0125-0.022 lb	1.6-2.8 oz	45	**RESTRICTED USE.** Green forage may be fed 15 days after last application.
beta-cyfluthrin + imidacloprid (Leverage 360)	0.02 + 0.04 lb	2.8 oz	45	**RESTRICTED USE.**
bifenthrin (Brigade 2EC)	0.033-1.0 lb	2.1-6.4 oz	18	**RESTRICTED USE.**
chlorantraniliprole (Prevathon)	0.047-0.066 lb	14.0-20.0 oz	21	
chlorpyrifos (Lorsban 4E)	0.5-1.0 lb	1.0-2.0 pt	28	**RESTRICTED USE.** Do not feed or graze livestock on treated plants.
chlorpyrifos + lambda-cyhalothrin (Cobalt Advanced)	0.31 + 0.016 – 0.74 + 0.038 lb	16.0-38.0 oz	30	**RESTRICTED USE.**
esfenvalerate (Asana XL)	0.02-0.03 lb	5.8-9.6 oz	21	**RESTRICTED USE.** Do not feed or graze livestock on treated plants. Do not exceed 0.2 lb per acre per season. Extremely toxic to fish.
flubendiamide (Belt SC)	0.0625-0.09375 lb	2.0-3.0 oz	14	
indoxacarb (Steward EC)	0.045-0.11 lb	4.6-11.3 oz	21	
lambda-cyhalothrin + chlorantraniliprole (Besiege)	0.016 + 0.033 lb –0.026 + 0.052lb	5.0-8.0 oz	30	**RESTRICTED USE.**
lambda-cyhalothrin (Karate Z) (Warrior T)	 0.015-0.025 lb 0.015-0.025 lb	 0.96-1.6 oz 1.92-3.2 oz	 45 45	**RESTRICTED USE**. Do not apply more than 7.68 oz per acre per season Do not graze or harvest treated soybean forage, straw or hay for livestock feed.
methomyl (Lannate LV) (Lannate SP)	 0.12-0.225 lb 0.11-0.225 lb	 0.4-0.75 pt 0.125-0.25 lb	 14 14	**RESTRICTED USE.** Wait 3 days to feed or graze as forage or 7 days for hay. Up to two applications may be used/season.
spinetoram (Radiant SC)	0.15-0.31 lb	2.0-4.0 oz	28	
spinosyn (Blackhawk)	0.038-0.05 lb	1.7-2.2 oz	0	Do not feed treated forage or hay to meat or dairy animals.

Table 4.48 - Recommended Insecticides for Corn Earworm Control (cont.)

Insecticide (Formulation)	Amount active ingredient per acre	Amount product per acre	Time limits: days before harvest	Remarks
thiamethozam + lambda-cyhalothrin (Endigo ZC)		3.5-4.0 oz	30	**RESTRICTED USE.** Do not graze or harvest treated soybean forage, straw or hay for livestock feed.
zeta-cypermethrin (Mustang Max)	0.0175-0.025 lb	2.1-6.4 oz	18	**RESTRICTED USE.** Do not graze or harvest treated soybean forage, straw, or hay for livestock feed.

Grasshopper

Table 4.49 - Recommended Insecticides for Grasshopper Control

Insecticide (Formulation)	Amount active ingredient per acre	Amount product per acre	Time limits: days before harvest	Remarks
acephate (Orthene 97)	0.24-0.49 lb	0.25-0.5 lb	14	
beta-cyfluthrin (Baythroid XL)	0.0155-0.022 lb	2.0-2.8 oz	45	**RESTRICTED USE.** Green forage may be fed 15 days after last application.
beta-cyfluthrin + imidacloprid (Leverage 360)	0.02 + 0.04 lb	2.8 oz	45	**RESTRICTED USE.**
bifenthrin (Brigade 2EC)	0.033-1.0 lb	2.1-6.4 oz	18	**RESTRICTED USE.**
chlorpyrifos (Lorsban 4E)	0.25-0.5 lb	0.5-1.0 pt	28	**RESTRICTED USE**. Do not feed or graze livestock on treated plants.
chlorpyrifos + lambda-cyhalothrin (Cobalt Advanced)	0.12 + 0.006 – 0.25 + 0.013 lb	6.0-13.0 oz		**RESTRICTED USE.**
dimethoate (Dimethoate 2.67EC) (Dimethoate 4EC)	0.5 lb 0.5 lb	1.5 pt 1.0 pt	21 21	**RESTRICTED USE**. Do not feed or graze within 5 days of the last application. Do not store above 90°F or below 32°F.
esfenvalerate (Asana XL)	0.03-0.05 lb	5.8-9.6 oz	21	**RESTRICTED USE.** Do not feed or graze livestock on treated plants. Do not exceed 0.2 lb ai per acre per season. Extremely toxic to fish.
lambda-cyhalothrin + chlorantraniliprole (Besiege)	0.026 + 0.052 lb – 0.033 + 0.065 lb	8.0-10.0 oz	30	**RESTRICTED USE.**
lambda-cyhalothrin (Karate Z) (Warrior T)	0.025-0.03 lb 0.025-0.03 lb	1.6-1.92 oz 3.2-3.84 oz	45 45	**RESTRICTED USE.** Do not apply more than 7.68 oz per acre per season. Do not graze or harvest treated soybean forage, straw or hay for livestock feed.

Table 4.49 - Recommended Insecticides for Grasshopper Control (cont.)

Insecticide (Formulation)	Amount active ingredient per acre	Amount product per acre	Time limits: days before harvest	Remarks
zeta-cypermethrin (Mustang Max)	0.02-0.025 lb	3.2-4.0 oz	21	**RESTRICTED USE.** Do not graze or harvest treated soybean forage, straw, or hay for livestock feed.

Armyworms

Table 4.50 - Recommended Insecticides for Fall, Yellowstriped, and Beet Armyworm

Insecticide (Formulation)	Amount active ingredient per acre	Amount product per acre	Time limits: days before harvest	Remarks
acephate (Orthene 97) (except beet)	0.73-0.97 lb	0.75-1.0 lb	14	
beta-cyfluthrin (Baythroid XL) (fall armyworm and beet armyworm - 1st and 2nd instars only)	0.0125-0.022 lb	1.6-2.8 oz	45	**RESTRICTED USE.** Green forage may be fed 15 days after last application.
bifenthrin (Brigade 2EC)	0.033-0.10 lb	2.1-6.4 oz	18	**RESTRICTED USE.**
chlorantraniliprole (Prevathon)	0.047-0.066 lb	14.0-20.0 oz	21	
chlorpyrifos + lambda-cyhalothrin (Cobalt Advanced) (beet)	0.43 + 0.022 lb – 0.74 + 0.038 lb	22.0-38.0 oz		**RESTRICTED USE.**
(yellowstriped)	0.215 + 0.01 – 0.51 + 0.026 lb	11.0-26.0 oz		
flubendiamide (Belt SC)	0.0625-0.09375 lb	2.0-3.0 oz	14	
indoxacarb (Steward 1.25SC)	0.045-0.11 lb	4.6-11.3 oz	21	
lambda-cyhalothrin + chlorantraniliprole (Besiege)	0.026 + 0.052 lb 0.033 + 0.065 lb	8.0-10.0 oz	30	**RESTRICTED USE.**
methomyl (Lannate LV) (Lannate SP)	0.225-0.3 lb 0.225-0.34 lb	0.75-1.0 pt 0.25-0.375 lb	14 14	**RESTRICTED USE.** Wait 3 days to feed or graze as forage or 7 days for hay. Up to two applications may be used per season.
methoxyfenozide (Intrepid 2F)	0.06-0.12 lb	4.0-8.0 oz	7 (hay/forage) 14 (seed)	
spinetoram (Radiant SC)	0.15-0.31 lb	2.0-4.0 oz	28	
spinosyn (Blackhawk)	0.038-0.05 lb	1.7-2.2 oz	28	Do not feed treated forage or hay to meat or dairy animals.

Table 4.50 - Recommended Insecticides for Fall, Yellowstriped, and Beet Armyworm (cont.)

Insecticide (Formulation)	Amount active ingredient per acre	Amount product per acre	Time limits: days before harvest	Remarks
thiamethozam + lambda-cyhalothrin (Endigo ZC) (bean leaf beetle)	0.064-0.072 lb	4.0-4.5 oz	30	**RESTRICTED USE.** Do not graze or harvest treated soybean forage, straw or hay for livestock feed.
zeta-cypermethrin (Mustang Max) (beet and fall) (yellowstriped)	0.02-0.025 lb 0.0175-0.025 lb	3.2-4.0 oz 2.8-4.0 oz	21	**RESTRICTED USE.** Do not graze or harvest treated soybean forage, straw, or hay for livestock feed.

Stinkbugs

Table 4.51 - Recommended Insecticides for Stinkbug Control

Insecticide (Formulation)	Amount active ingredient per acre	Amount product per acre	Time limits: days before harvest	Remarks
acephate (Orthene 97)	0.49-0.97 lb	0.5-1.0 lb	14	
beta-cyfluthrin (Baythroid XL)	0.0125-0.022 lb	1.6-2.8 oz	45	**RESTRICTED USE.** Green forage may be fed 15 days after last application.
beta-cyfluthrin + imidacloprid (Leverage 360)	0.02 + 0.04 lb	2.8 oz	45	**RESTRICTED USE.**
bifenthrin (Brigade 2EC)	0.033-0.1 lb	2.1-6.4 oz	18	**RESTRICTED USE.**
chlorpyrifos (Lorsban 4E)	1.0 lb	2.0 pt	28	**RESTRICTED USE.** Do not feed or graze livestock on treated plants.
chlorpyrifos + lambda-cyhalothrin (Cobalt Advanced)	0.31 + 0.016 – 0.74 + 0.038 lb	16.0-38.0 oz	30	**RESTRICTED USE.**
clothianidin (Belay)	0.05-0.067 lb	3.0-4.0 oz	21	Do not graze or feed soybean forage and hay to livestock.
esfenvalerate (Asana XL)	0.03-0.05 lb	5.8-9.6 oz	21	**RESTRICTED USE.** Do not feed or graze livestock on treated plants. Do not exceed 0.2 lb ai/A/season. Extremely toxic to fish.
lambda-cyhalothrin + chlorantraniliprole (Besiege)	0.026 + 0.052 lb – 0.033 + 0.065 lb	8.0-10.0 oz	30	**RESTRICTED USE.**
lambda-cyhalothrin (Karate Z) (Warrior T)	0.025-0.03 lb 0.025-0.03 lb	1.6-1.92 oz 3.2-3.84 oz	45 45	**RESTRICTED USE**. Do not apply more than 7.68 oz/A per season. Do not graze or harvest treated soybean forage, straw or hay for livestock feed.

Table 4.51 - Recommended Insecticides for Stinkbug Control (cont.)

Insecticide (Formulation)	Amount active ingredient per acre	Amount product per acre	Time limits: days before harvest	Remarks
thiamethozam + lambda-cyhalothrin (Endigo ZC) (bean leaf beetle)	0.064.0.072 lb	4.0-4.5 oz	30	**RESTRICTED USE.** Do not graze or harvest treated soybean forage, straw or hay for livestock feed.
zeta-cypermethrin (Mustang Max)	0.02-0.025 lb	3.2-4.0 oz	21	**RESTRICTED USE.** Do not graze or harvest treated soybean forage, straw, or hay for livestock feed.

Soybean Looper

Table 4.52 - Recommended Insecticides for Soybean Looper Control

Insecticide (Formulation)	Amount active ingredient per acre	Amount product per acre	Time limits: days before harvest	Remarks
chlorantraniliprole (Prevathon)	0.047-0.066 lb	14.0-20.0 oz	21	
flubendiamide (Belt)	0.06-0.09 lb	2.0-3.0 oz	14	
indoxacarb (Steward 1.25SC)	0.055-0.11 lb	5.6-11.3 oz	21	
lambda-cyhalothrin + chlorantraniliprole (Besiege)	0.033 + 0.065 lb	10.0 oz	30	
methoxyfenozide (Intrepid 2F)	0.06-0.12 lb	4.0-8.0 oz	7 (hay/forage) 14(seed)	
spinetoram (Radiant SC)	0.15-0.31 lb	2.0-4.0 oz	28	
spinosyn (Blackhawk)	0.025-0.05 lb	1.1-2.2 oz	28	Do not feed treated forage or hay to meat or dairy animals.

Soybean Aphid

Table 4.53 - Recommended Insecticides for Soybean Aphid Control

Insecticide (Formulation)	Amount active ingredient per acre	Amount product per acre	Time limits: days before harvest	Remarks
acephate (Orthene 90S) (Orthene 97)	 0.5 -1.0 lb 0.73-0.97 lb	 0.56-1.1 lb 0.75-1.0 lb	 14 14	Do not graze or cut vines for hay or forage.
bifenthrin (Brigade 2EC)	0.033-0.1 lb	2.1-6.4 oz	18	**RESTRICTED USE.**
chlorpyrifos (Lorsban 4E)	0.5-1.0 lb	1.0-2.0 pt	28	**RESTRICTED USE.** Do not feed or graze livestock on treated plants.

Table 4.53 - Recommended Insecticides for Soybean Aphid Control (cont.)

Insecticide (Formulation)	Amount active ingredient per acre	Amount product per acre	Time limits: days before harvest	Remarks
chlorpyrifos + lambda-cyhalothrin (Cobalt Advanced)	0.21 + 0.01 – 0.51 + 0.026 lb	11.0-26.0 oz		**RESTRICTED USE.**
clothianidin (Belay)	0.05-0.067 lb	3.0-4.0 oz	21	Do not graze or feed soybean forage and hay to livestock.
cyfluthrin (Baythroid XL)	0.044 lb	2.0-2.8 oz	45	**RESTRICTED USE.** Green forage may be fed 15 days after last application.
esfenvalerate (Asana XL)	0.03-0.05 lb	5.8-9.6 oz	21	**RESTRICTED USE.** Do not feed or graze livestock on treated plants. Do not exceed 0.2 lb per acre per season. Extremely toxic to fish.
flupyradifurone (Sivanto)	0.09-0.137 lb	7.0-10.5 oz	21	
imidacloprid (Gaucho 600)	1.0 oz/cwt	1.6 oz/cwt	N/A	Seed treatment.
lambda-cyhalothrin + chlorantraniliprole (Besiege)	0.016 + 0.033 lb – 0.026 + 0.052 lb	5.0-8.0 oz	30	**RESTRICTED USE.**
lambda-cyhalothrin (Karate Z) (Warrior T)	0.015-0.025 lb 0.015-0.025 lb	0.96-1.6 oz 1.92-3.2 oz	45 45	**RESTRICTED USE.** Do not apply more than 7.68 oz per acre per season. Do not graze or harvest treated soybean forage, straw, or hay for livestock feed.
thiamethoxam (Cruiser 5FS)	0.8 oz/cwt	1.28 oz/cwt	N/A	Seed treatment.
thiamethozam + lambda-cyhalothrin (Endigo ZC)	0.056-0.064 lb	3.5-4.0 oz	30	**RESTRICTED USE.** Do not graze or harvest treated soybean forage, straw or hay for livestock feed.
zeta-cypermethrin (Mustang Max)	0.0175-0.025 lb	2.8-4.0 oz	21	**RESTRICTED USE.** Do not graze or harvest treated soybean forage, straw, or hay for livestock feed.

Pest Thresholds

Table 4.54 - Corn Earworm Thresholds in Soybeans[1]

Sampling Tool	Row Width	Rows Sampled	Threshold
Sweep Net[2]	7"	5	2.5
	14"	3	2.4
	21"	2	3.1
	36"	1	3.1
	7"	2	0.9
Rigid Beat Cloth[3]	14"	1	0.7
	21"	1	1.2
Beat Cloth	30"	1 or 2	1.0
Standard or Rigid[4]	36"	1 or 2	1.2

[1] Only count worms 3/8 inch or longer.
[2] Based on a 15-sweep sample.
[3] Number per sample.
[4] Number per row foot rather than number per sample.

The timing strategy is to wait until most of the larvae are three-eights of an inch or more in length and then treat when pod damage is first evident. This allows for most egg laying and hatching to occur before treatment and thus reduces the chances of a second spray being needed later. Some defoliation may occur before it is time to treat and this injury should be evaluated just like that of any defoliator. If other defoliating pests are present when pod damage is first evident, then adjustments should be made in the treatment thresholds for earworms. For example, if green cloverworms are actively feeding and have already caused 15 percent defoliation, then insecticide treatment would be justified at lower earworm infestations, about one-half the normal threshold. Finally, treatment may not be necessary if the majority of worms are infected with the fungus disease. This white to greenish white fungus can have a significant impact on earworm populations. Access the web (*www.ipm.vt.edu/cew*) to calculate thresholds based on your estimated cost of control (product cost plus application cost) and today's bushel value.

Table 4.55 - Other Soybean Insect Pest Thresholds

	# per row-foot row-spacing		# per 15 sweeps row-spacing		
Pest species	**7"-21"**	**above 21"**	**7"-21"**	**above 21"**	**Other comments**
Full-season plantings					
Mexican bean beetle	4	6	24	36	40% defoliation - pre-bloom, 15% defoliation - pod-fill, 35+% defoliation - fully developed seeds.
Spider mite	Damage occurring and live mites present				Live mites on 50% of leaves and 50% leaves showing white spotting or premature leaf drop.
Other defoliators[1]					40% defoliation - pre-bloom, 15% defoliation - pod-fill, 35+% defoliation - fully developed seeds.
Double-crop plantings with poor growth					
Mexican bean beetle	2	4	12	24	20% defoliation - pre-bloom, 15% defoliation - fully developed seeds.

[1]Other defoliators include any combinations of green cloverworm, bean leaf beetle, blister beetle, Japanese beetle, soybean looper, yellowstriped armyworm, grasshoppers, or fall armyworm.

Table 4.55 - Other Soybean Insect Pest Thresholds (cont.)

	# per row-foot row-spacing		# per 15 sweeps row-spacing		
Pest species	**7"-21"**	**above 21"**	**7"-21"**	**above 21"**	**Other comments**
Spider mite	Damage occurring and live mites present				Live mites on 50% of leaves and 50% leaves showing white spotting or premature leaf drop.
Other defoliators[1]					20% defoliation - pre-bloom, 10% defoliation - pod-fill, 15% defoliation - fully developed seeds.

[1]Other defoliators include any combinations of green cloverworm, bean leaf beetle, blister beetle, Japanese beetle, soybean looper, yellowstriped armyworm, grasshoppers, or fall armyworm.

Table 4.56 - Revised Stink Bug Thresholds for Soybean (all stink bug species combined)

	# per row foot		# per 15 sweeps	
Row spacing	7-21” rows	Above 21”	7-21” rows	Above 21”
New (Grain)	1-2	1-2	5	5
New (Seed)	0.5	0.5	2.5	2.5

Apply from R3-4 to R7, double after R7

Soybean aphid

The current economic threshold for aphids is an average of 250 aphids per plant, on two consecutive field visits spaced about 5-7 days apart. This is because aphid populations can “crash” quickly due to heavy pressure by natural enemies like lady beetles, parasitic wasps, and fungal diseases. When scouting, choose a “Z” or “W” shaped pattern to cover the entire field and sample at least 20 to 30 plants per field by examining the entire plant, including stems and upper and lower leaf surfaces. Use the aphid/plant average for determining the need for treatment. The threshold applies to soybeans through the R5 growth stage (3 mm long seed in the pod at one of the four uppermost nodes on the main stem), after which time plants can tolerate 1,000+ aphids with no threat to yield.

Peanuts

D. Ames Herbert, Jr., Extension Entomologist, Tidewater AREC

Thrips

Seedling peanut plants are usually attacked by thrips within the first 6-8 weeks after planting, and thrips may complete several generations per season under favorable conditions. These tiny, spindle-shaped insects feed primarily within the developing, unfolded leaflets causing crinkling of the leaflets and stunting of the plants. Blackening of the small leaflets occurs with severe infestations and can be mistaken for chemical injury. Under favorable conditions, plants normally outgrow this injury with no reduction in yield or grade. However, the delay in vine growth from early season thrips injury may retard maturity. This in combination with other injury, such as herbicide burn, can reduce yield.

Thrips can be controlled with either systemic or with foliar-applied insecticides. Systemics can be incorporated in the furrow with the seed at planting. Foliar treatments can be applied as needed after crop emergence. During dry seasons or seasons with excessive rains, the systemic insecticides may not give adequate thrips control due to poor systemic uptake by the plants or leaching of chemicals from the soil. Foliar treatments may be warranted to allow more rapid plant growth to assist in weed control if systemics are ineffective, or if injury appears excessive. Foliar treatment is recommended when 25 percent of the leaves show thrips damage and pest populations are still active.

Table 4.57 - Recommended Insecticides for Thrips Control

Treatment	Insecticide (Formulation)	Amount product per acre	Time limits: days before harvest	Remarks
Foliar	acephate (Orthene 97) band rate broadcast rate	 3.0-6.0 oz 6.0-12.0 oz	14	Do not feed treated forage or hay to livestock or allow animals to graze treated areas.
	beta-cyfluthrin (Baythroid XL)	2.8 oz	14	**RESTRICTED USE.**
	bifenthrin (Brigade 2EC)	5.12-6.4 oz	14	**RESTRICTED USE.** Do not feed immature plants and peanut hay to livestock.
	methomyl (Lannate LV) (Lannate SP)	 1.5-3.0 pt 0.5-1.0 lb	 21 21	**RESTRICTED USE.** Do not feed treated vines.
On-seed	acephate (Acephate 90SP)	3.5 oz/100 lbs seed	–	Mix in the planter to obtain good coverage of ALL seed by layering seed and product. Fill the planter box 1/3 full of seed with 1/3 of the product,add the next 1/3 of the seed and product, then add the last 1/3 of the seed and product. Gently stir each layer before adding the next. **Caution:** Do not use with seed inoculants. Not recommended for air planters. Do not use treated seed for food or feed purposes, or process for oil.
	thiamethoxam (CruiserMaxx Peanut)	3.0-4.0 oz/100 lbs seed	0	
In-furrow	imidacloprid (Admire Pro)	7.0-10.5 oz	14	Apply as an in-furrow spray during planting directed on or below seed.
	imidacloprid + fluopyram (Velum Total)	18 oz	14	Apply as an in-furrow spray during planting directed on or below seed

Table 4.57 - Recommended Insecticides for Thrips Control (cont.)

Treatment	Insecticide (Formulation)	Amount product per acre	Time limits: days before harvest	Remarks
	phorate (Thimet 20G)	5.0 lb	90	**RESTRICTED USE.** Distribute granules evenly in the furrow. Do not graze or feed treated hay or forage to livestock.

Potato Leafhopper

The potato leafhopper is a common "above-ground" pest of peanuts in Virginia. This small, wedge-shaped, light green to yellow insect damages the peanut plant by feeding on the undersides of leaves in a piercing-sucking manner. Injured leaf tips turn yellow first then brown and tend to curve downward. Apparently, during feeding, toxins are also passed into plants at feeding sites. If enough damage is done, toxins can stop vine growth resulting in reductions in yield and grade. Injury may occur at any time from early June until the middle of August or later in some years. It is important to note that although late-season damage appears worse in some years, damage done early in the season probably affects plant vigor and yield more. Systemic insecticides applied at planting time will usually control potato leafhoppers that occur early, but if no pegging-time insecticide is applied, it may be necessary to make one or two foliar applications in July or early August. Pegging time applications of rootworm insecticides will usually control leafhoppers from that time until harvest.

Foliar treatments should be made only on a basis of need. When 25% of the leaves show tip yellowing typical of leafhopper damage, and active adult and immature leafhoppers are seen, treat with an effective chemical. When foliar treatments are required, the first application usually is made about the middle of July, and the second about the first of August (if needed). If scheduled treatments are being made for control of leafspot, insecticides may be tank mixed. Do not include insecticides with all leafspot treatments as a matter of course. Too many insecticide applications, or applications later in the season, could cause spider mite populations to increase, especially in dry years after adjacent corn and weedy areas have been cut. Make leafhopper applications only when problems have been identified.

Table 4.58 - Recommended Insecticides for Potato Leafhopper Control

Treatment	Insecticide (Formulation)	Amount product per acre	Time limits: days before harvest	Remarks
Foliar	acephate (Orthene 97)	6.0-12.0 oz	14	Do not feed treated forage or hay to livestock or allow animals to graze treated areas.
	beta-cyfluthrin (Baythroid XL)	1.0-1.8 oz	14	**RESTRICTED USE.**
	beta-cyfluthrin + imidacloprid (Leverage 360)	2.8 oz	14	**RESTRICTED USE.**
	bifenthrin (Brigade 2EC)	2.1-6.4 oz	14	**RESTRICTED USE.** Do not feed immature plants and peanut hay to livestock.
	esfenvalerate (Asana XL)	2.9-5.8 oz	21	**RESTRICTED USE.** Do not feed or graze livestock on treated vines. Do not exceed 29 oz/ season.
Foliar (cont.)	fenpropathrin (Danitol 2.4EC)	6.0-10.6 oz	14	**RESTRICTED USE.** Do not graze or feed treated peanut vine forage or dried hay within 14 days of the last application. Do not exceed 2.6 pints total application/A/season.

[1]**General -** Apply pegging treatments in 10- to 18-inch bands on row during the first 2 weeks in July after pegging begins and before vines close in middles. Effectiveness of treatments is increased if insecticides are covered by shallow cultivation to avoid exposure to sunlight and lateral movement with heavy rains.

Table 4.58 - Recommended Insecticides for Potato Leafhopper Control (cont.)

Treatment	Insecticide (Formulation)	Amount product per acre	Time limits: days before harvest	Remarks
	lambda-cyhalothrin (Karate EC) (Karate Z) (Warrior T)	 1.92-3.2 oz 0.96-1.6 oz 1.92-3.2 oz	 14 14 14	**RESTRICTED USE.** Do not apply more than 15.36 oz/ A/season. Do not graze livestock in treated areas, or use treated vines or hay for animal feed.
	methomyl (Lannate LV) (Lannate SP)	 0.75- 3.0 pt 0.25- 1.0 lb	 21 21	**RESTRICTED USE.** Do not feed treated vines.
	zeta-cypermethrin (Mustang Max)	 1.28-4.0 oz	 7	**RESTRICTED USE.** Do not graze livestock in treated areas. Do not use treated vines or hay for animal feed.
Pegging[1]	chlorpyrifos (Lorsban 15G)	—	—	Lorsban 15G is not labeled for use against leafhopper but will provide suppression if applied for soil insects.

[1]**General -** Apply pegging treatments in 10- to 18-inch bands on row during the first 2 weeks in July after pegging begins and before vines close in middles. Effectiveness of treatments is increased if insecticides are covered by shallow cultivation to avoid exposure to sunlight and lateral movement with heavy rains.

Southern Corn Rootworm

The southern corn rootworm, which is the immature stage of the spotted cucumber beetle, can cause extensive injury to the Virginia peanut crop. Rootworm larvae develop in the soil and feed directly on pegs and pods. Finding rootworms in the soil is very difficult and injury is often not detected until after peanuts are dug, when it is too late for control measures. A preventive treatment is the best strategy. After an infestation is established, control is difficult and often ineffective. Determining the need to treat for southern corn rootworm should be done on a field-by-field basis. Decisions can be based on both adult populations and past history of peanut fields. Adult beetles can be readily detected in peanut fields. Their presence in moderate to high numbers from mid-July to early August should be a warning that a problem could develop. Adults will lay eggs that could develop into the damaging larval stage. Early detection of adults can thus allow for timely treatment and prevention of injury.

Knowledge of the past history of rootworm injury can also be useful in determining the need for treatment. If injury has ever occurred in a field, it will likely occur in other years. Keep field records on the extent of pod and peg injury noticed at harvest time. Pay particular attention to fields with higher levels of organic matter and clay. Rootworms have a higher survival rate in those soils due to higher moisture holding capacity, and injury will typically be more severe than in “light” soils. Use the “Southern Corn Rootworm Risk Index” to aid you in deciding which fields need insecticide treatment.

If rootworm treatments are necessary, they should be applied as 10-18 inch bands on the row during early pegging. Usually, this period occurs during the first 2 weeks of July. Treatment effectiveness is increased if materials are lightly incorporated using shallow cultivation. If vine growth and pegging are in an advanced stage, do not cultivate, as vine “dirting,” which leads to disease development and injury to pegs, may offset the gain from insect control. Carefully calibrate equipment to deliver recommended insecticide rates. Using more than is recommended will not increase effectiveness and using less could result in a complete insecticide failure.

Table 4.59 - Recommended Insecticides for Southern Corn Rootworm Control

Treatment	Insecticide (Formulation)	Amount product per acre	Time limits: days before harvest	Remarks
Pegging[1]	chlorpyrifos (Lorsban 15G)	13.0 lb	21	Do not apply more than 13.3 lb/ season. Do not feed peanut forage or hay to meat or dairy animals.
	phorate (Thimet 20G[2])	10.0 lb	90	**RESTRICTED USE.** Distribute granules as a band over the fruiting zone at pegging. Work into the top few inches of soil immediately. Do not graze or feed treated hay or forage to livestock.

[1]**General -** Apply pegging treatments in 10-18 inch bands on row during the first 2 weeks in July after pegging begins and before vines close in middles. Effectiveness of treatments is increased if insecticides are covered by shallow cultivation to avoid exposure to sunlight and lateral movement with heavy rains.
[2]Labels stipulate light incorporation.

Corn Earworm

Annual infestations of the corn earworm and fall armyworm occur in most Virginia peanut fields. Usually there is a single generation of each species per season. Worms feed on leaf tissue causing peanuts to look ragged; however, research has shown that one-third of peanut foliage can be lost at the normal time of corn earworm infestations (mid-August to early September) without loss of yield or grade. Scouting fields is the only way to determine if treatment is needed. Scout by reaching halfway across 2 row-feet of plants and shaking foliage vigorously towards the row middle. Repeat on the opposite row. Count the worms on the ground and repeat the sample in several spots in the field. Treatment is recommended if an average of 8 or more worms are found per sample, or 4 per row-foot.

If treatment is necessary, apply sprays using systems that provide good canopy penetration and coverage. If spider mites are already present in the field, use of some insecticides may allow for rapid build-up. Scout fields for treatment effectiveness and for possible increases in spider mite activity soon after applications.

Table 4.60 - Recommended Insecticides for Corn Earworm Control

Treatment	Insecticide (Formulation)	Amount product per acre	Time limits: days before harvest	Remark
Foliar[1]	acephate (Orthene 97)	12.0-16.0 oz	14	Do not feed treated forage or hay to livestock or allow animals to graze treated areas.
	Bacillius thuringiensis (DiPel ES)	1.0-2.0 pt	0	For pyrethroid resistant corn earworm when tank mixed with a pyrethroid at a labeled use rate.
	beta-cyfluthrin (Baythroid XL)	1.8-2.4 oz	14	**RESTRICTED USE.**
	beta-cyfluthrin + imidacloprid (Leverage 360)	2.8 oz	14	**RESTRICTED USE.**
	bifenthrin (Brigade 2EC)	2.1-6.4 oz	14	**RESTRICTED USE.** Do not feed immature plants and peanut hay to livestock.
	chlorantraniliprole (Prevathon)	14.0-20.0 oz	1	

[1]**General** - Treat only if foliage loss is heavy (1/3 or more). Earworms are easier to control when they are less than 1/2 inch long.

Table 4.60 - Recommended Insecticides for Corn Earworm Control (cont.)

Treatment	Insecticide (Formulation)	Amount product per acre	Time limits: days before harvest	Remark
	esfenvalerate (Asana XL)	2.9-5.8 oz	21	**RESTRICTED USE.** Do not feed or graze livestock on treated vines. Do not exceed 29.0 oz/season.
	fenpropathrin (Danitol 2.4EC)	10.6-16.0 oz	14	**RESTRICTED USE.** Do not graze or feed treated peanut vine forage or dried hay within 14 days of the last application. Do not exceed 2.6 pints total application/A/season.
	flubendiamide (Belt SC)	2.0-4.0 oz	3	
	indoxacarb (Steward EC)	6.7-11.3 oz	14	Do not feed or graze livestock on treated fields.
	lambda-cyhalothrin (Karate EC) (Karate Z) (Warrior T)	2.56-3.84 oz 1.28-1.92 oz 2.56-3.84 oz	14 14 14	**RESTRICTED USE.** Do not apply more than 15.36 oz/A/ season. Do not graze livestock in treated areas, or use treated vines or hay for animal feed.
Foliar[1] (cont.)	methomyl (Lannate LV) (Lannate SP)	0.75-3.0 pt 0.25-1.0 lb	21 21	**RESTRICTED USE.** Do not feed treated vines.
	spinetoram (Radiant SC)	3.0-8.0 oz	3	Do not allow grazing of peanut hay.
	spinosyn (Blackhawk)	1.7-3.3 oz	3	Do not allow grazing of crop residue or harvest of crop residue for hay until 14 days after the last application.
	zeta-cypermethrin (Mustang Max)	3.2-4.0 oz	7	**RESTRICTED USE.** Do not graze livestock in treated areas. Do not use treated vines or hay for animal feed.

[1]**General** - Treat only if foliage loss is heavy (1/3 or more). Earworms are easier to control when they are less than 1/2 inch long.

Table 4.61 - Recommended Insecticides for Fall Armyworm Control

Treatment	Insecticide (Formulation)	Amount product per acre	Time limits: days before harvest	Remark
Foliar[1]	acephate (Orthene 97)	12.0-16.0 oz	14	Do not feed treated forage or hay to livestock or allow animals to graze treated areas.
	Bacillius thuringiensis (DiPel ES)	1.0-2.0 pt	0	For pyrethroid resistant corn earworm when tank mixed with a pyrethroid at a labeled use rate.
	beta-cyfluthrin (Baythroid XL)	2.4-2.8 oz	14	**RESTRICTED USE.**
	beta-cyfluthrin + imidacloprid (Leverage 360)	2.8 oz	14	**RESTRICTED USE.**

[1]**General** - Treat only if foliage loss is heavy (1/3 or more). Earworms are easier to control when they are less than 1/2 inch long.

Table 4.61 - Recommended Insecticides for Fall Armyworm Control (cont.)

Treatment	Insecticide (Formulation)	Amount product per acre	Time limits: days before harvest	Remark
Foliar[1] (cont.)	bifenthrin (Brigade 2EC)	2.1-6.4 oz	14	**RESTRICTED USE.** Do not feed immature plants and peanut hay to livestock.
	chlorantraniliprole (Prevathon)	14.0-20.0 oz	1	
	esfenvalerate (Asana XL)	9.6 oz	21	**RESTRICTED USE.** Suppression only. Do not feed or graze livestock on treated vines. Do not exceed 29.0 oz/season.
	fenpropathrin (Danitol 2.4EC)	10.6-16.0 oz	14	**RESTRICTED USE.** Do not graze or feed treated peanut vine forage or dried hay within 14 days of the last application. Do not exceed 2.6 pints total application/A/season.
	flubendiamide (Belt SC)	2.0-4.0 oz	3	
	indoxacarb (Steward EC)	9.2-11.3 oz	14	
	lambda-cyhalothrin (Kaiso 24WG)	2.0 oz	14	**RESTRICTED USE.**
	methomyl (Lannate LV) (Lannate SP)	0.75-1.5 pt 0.25-0.5 lb	21 21	**RESTRICTED USE.** Do not feed treated vines. 2 pints may be required for good control.
	methoxyfenozide (Intrepid 2F) (beet armyworm only)	6.0-10.0 oz	7	
	spinetoram (Radiant SC)	3.0-8.0 oz	3	Do not allow grazing of peanut hay.
	spinosyn (Blackhawk)	1.7-3.3 oz	3	Do not allow grazing of crop residue or harvest of crop residue for hay until 14 days after the last application.
	zeta-cypermethrin (Mustang Max)	3.2-4.0 oz	7	**RESTRICTED USE.** Do not graze livestock in treated areas. Do not use treated vines or hay for animal feed.

[1]**General** - Treat only if foliage loss is heavy (1/3 or more). Earworms are easier to control when they are less than 1/2 inch long.

Spider Mite

Mites, which have become more numerous during the past several years, are especially injurious during hot, dry weather. While insecticides are very valuable in controlling leafhoppers, thrips, and worms, they may be responsible for destroying some of the natural enemies of spider mites and thus promoting the build-up of mite populations. Insecticides should be used **only when needed** for insect control. Tank mixes that include both fungicides and insecticides are more likely to allow spider mite build-up than when either material is used separately.

Spider mites feed mainly on the undersides of the leaves. They suck the juice from the foliage and cause the leaves to turn brown and eventually drop off. Heavy infestations usually occur first around the borders of peanut fields; then they spread inward throughout the fields. Avoid harvesting spider mite infested cornfields or mowing weedy areas next to peanut fields until peanuts are harvested. Spider mites will readily move into peanuts when corn dries down or is harvested. Be prepared to treat peanuts if adjacent corn is infested.

Important: If you are going to treat, calibrate your equipment to deliver the right amount of pesticide per acre. Arrange and adjust the nozzles or spouts in a manner that will direct the chemical into the desired area to be treated. Adequate sprayer pressure (40 to 60 psi) will aid in getting chemicals in contact with the undersides of leaves and within denser foliage. Penetration of foliage with 20 to 30 gallons of water per acre is very important for the control of spider mites.

Table 4.62 - Recommended Insecticides for Spider Mite Control

Treatment	Insecticide (Formulation)	Amount product per acre	Time limits: days before harvest	Remarks
Foliar	bifenthrin (Brigade 2EC)	5.12-6.4 oz	14	**RESTRICTED USE.** Do not feed immature plants and peanut hay to livestock.
	fenpropathrin (Danitol 2.4EC)	10.6-16.0 oz	14	**RESTRICTED USE.** Do not graze or feed treated peanut vine forage or dried hay within 14 days of the last application. Do not exceed 2.6 pints total application/A/season.
	propargite (Comite 6.5EC) (Omite 30W)	2.0 pt 3.0-5.0 lb	14 14	Use a minimum of 20 gallons/A with ground equipment or 5 gallons by air. Make no more than 2 applications/year (either Comite OR Omite). Do not plant rotational crops within 6 months of last application. Do not feed hay to livestock.

Lesser Cornstalk Borer

Lesser cornstalk borer is typically not a problem in Virginia peanut fields. However, it does thrive under hot dry conditions and can become a problem when those conditions continue for 3-4 weeks. Infestations will be most severe where soils are sandy and in high, well drained areas within fields. Larvae are 0.5 to 0.75 inch long and are banded with alternating brown and blue stripes. They wiggle vigorously when disturbed. Larvae feed by burrowing into main stems, lateral limbs, plant crowns, and pods and can do extensive damage, even kill plants. Larvae produce silk-and-sand web tubes, which are attached to pods or stems at the point of feeding. Evidence of web tubes is a sure sign of borer activity.

If weather conditions become favorable for borers, survey fields for damaged plants and larvae. If damage is obvious and active larvae are still present in 10% or more of the plants, treatment is recommended.

Table 4.63 - Recommended Insecticides for Lesser Cornstalk Borer Control

Treatment	Insecticide (Formulation)	Amount product per acre	Time limits: days before harvest	Remarks
Granular	chlorpyrifos (Lorsban 15G)	6.7-13.3 lb	21	Apply in 10-18 inch band on row at first sign of borer. Do not feed peanut forage or hay to meat or dairy animals. Do not apply more than 13.3 lb/season. 10.0-13.0 lb may be broadcast by air as a rescue treatment.

Grasshopper

Table 4.64 - Recommended Insecticides for Grasshopper Control

Treatment	Insecticide (Formulation)	Amount product per acre	Time limits: days before harvest	Remarks
Foliar	acephate (Orthene 97)	4.0-8.0 oz	14	Do not feed treated forage or hay to livestock or allow animals to graze treated areas.
	beta-cyfluthrin (Baythroid XL)	1.8-2.4 oz	14	**RESTRICTED USE.**
	bifenthrin (Brigade 2EC)	2.1-6.4 oz	14	**RESTRICTED USE.** Do not feed immature plants and peanut hay to livestock.
	esfenvalerate (Asana XL)	5.8-9.6 oz	21	**RESTRICTED USE.** Do not feed or graze livestock on treated vines. Do not exceed 29.0 oz/season.
	zeta-cypermethrin (Mustang Max)	3.2-4.0 oz	7	**RESTRICTED USE.** Do not graze livestock in treated areas. Do not use treated vines or hay for animal feed.

Pesticide Usage Charts

Many pesticides control more than one pest. The three tables below summarize the effectiveness of some popular pesticides used at time of planting, at time of pegging, or as foliar treatments for the control of major insect pests which attack peanuts.

Table 4.65 - Insecticide Activity of Products Applied at Time of Planting

	Pests			
Chemical	**Thrips**	**Leafhopper**	**Rootworm**	**Spider Mite**
Orthene	E	Early	No	No
Thimet	G	Early	P	No

P=poor control, F=fair control, G=good control, E=excellent control, No=not labeled or no activity expected.

Table 4.66 - Insecticide Activity of Granules Applied at Time of Pegging

	Pests			
Chemical	**Rootworm**	**Leafhopper**	**Spider Mite**	**Corn Earworm**
Lorsban[1]	E	G	No	No
Thimet	G	Aids	No	No

P=poor control, F=fair control, G=good control, E=excellent control, No=not labeled or no activity expected.
[1] **NOT SYSTEMIC.** Do not apply in the furrow.

Table 4.67 - Insecticide Activity of Foliar Treatments Applied when Pests Are Present

		Pest Species Controlled						
Insecticide	**Formulation**[1]	**Thrips**	**Leaf-hopper**	**Root-worm**	**Corn earworm**	**Fall army-worm**	**Lesser corn stalk borer**	**Spider mite**
Asana	XI	No	E	No	E	G	No	No[2]
Comite, Omite	6.5EC, 30W	No	No	No	No	No	No	E
Danitol	2.4EC	No	E	No	E	G	No	E
Karate	Z	E	E	No	E	G	No	F
Lannate	L	P	G	No	E	G	No	No[2]
Malathion	57% EC	P	G	No	P	P	No	P
Orthene	97	E	E	No	G	F	No	No[2]
Sevin	4F, 80s, XLR Plus	P	E	No	F	F	No	No[2]
Steward	1.25SC	No	No	No	E	E	No	No
Blackhawk		No	No	No	E	E	No	No

P=poor control, F=fair control, G=good control, E=excellent control, No=not labeled or no activity expected.
[1]There are other insecticides and other formulations which have federal registration for use on peanuts.
[2]Use of these insecticides may allow rapid build-up of spider mites. Use with caution during extended periods of dry weather.

Cotton

D. Ames Herbert, Jr., Extension Entomologist, Tidewater AREC

Thrips

Insect pests such as aphids, spider mites, cutworms, plant bugs and thrips affect cotton in the early stages of development. At present, only thrips must be controlled annually. These tiny, spindle-shaped insects complete several generations per season under favorable conditions and feed primarily by puncturing and rasping the outer cells of the young leaves and buds. Damage results in ragged looking plants with crinkled or "possum-eared" leaves. The damage associated with thrips feeding can stunt growth resulting in fruiting at higher positions and delayed maturity. Damage is most severe if young cotton is subjected to adverse growing conditions such as cool or dry weather or when alternate thrips hosts such as small grains dry down prematurely forcing large numbers of thrips to seek other hosts. Adverse growing conditions during the early stages of cotton development may reduce the uptake of systemic insecticides, therefore early inspection of the crop is important due to the length of the growing season in most of Virginia.

Orthene 97 in furrow - Orthene 97 can be dribbled or sprayed in furrow during the planting operation. Orthene provides good thrips control for up to five weeks if applied at 12-16 oz of product per acre. Applications are usually made at 5 to 10 gallons per acre and are compatible with several liquid fungicides.

Gaucho and Cruiser seed treatment - Gaucho- and Cruiser-treated seed provide good thrips control. May need foliar treatment to provide season-long control.

There is no formal threshold for thrips based on insect numbers or plant injury. Treatment is thought to be justified if the following conditions are met: 1) thrips injury is common, 2) 10% or more plants show extensive bud damage, 3) immature thrips can be easily found, and 4) plant growth is poor.

Table 4.68 - Recommended Insecticides for Thrips Control

Treatment	Insecticide (Formulation)	Amount product per acre	Time limits: days before harvest	Remarks
In-furrow or seed	acephate (Orthene 97)	12.0-16.0 oz	21	Apply as a liquid into the seed furrow in 5-10 gal of water/A with a system that insures good seed coverage. Do not feed treated forage or hay to livestock or allow animals to graze treated areas.
	imidacloprid (Admire Pro)	7.4-9.2 oz	—	Apply as an in-furrow spray during planting directed on or below seed. Do not graze treated fields after any application of Admire Pro.
	imidacloprid (Gaucho Grande, Aeris)	0.375 mg ai/ seed	—	—
	imidacloprid + fluopyram (Velum Total)	14-18 oz	30	Apply as an in-furrow spray during planting directed on or below seed
	phorate (Thimet 20G)	6.0-9.0 oz/1,000 row ft	—	**RESTRICTED USE.** Do not graze or feed treated hay or forage to livestock.
	thiamethoxam (Cruiser 5FS, Avicta CP)	0.30-0.375 mg ai/seed	—	—
Foliar	acephate (Orthene 97)	2.5-3.0 oz	21	May be tank mixed with Roundup Ultra or Roundup Ultra Max (for use on Roundup ready cotton), Buctril (for use on BXN cotton), or Staple.

Table 4.68 - Recommended Insecticides for Thrips Control (cont.)

Treatment	Insecticide (Formulation)	Amount product per acre	Time limits: days before harvest	Remarks
Foliar (cont.)	beta-cyfluthrin (Baythroid XL)	0.8-1.6 oz	0	**RESTRICTED USE**
	bifenthrin (Brigade 2EC)	1.3-6.4 oz	14	**RESTRICTED USE.**
	chlorpyrifos+ lambda-cyhalothrin (Cobalt Advanced)	16.0-38.0 oz	21	**RESTRICTED USE.** Do not allow meat or dairy animals to graze in treated areas. Do not feed gin trash or treated forage to meat or dairy animals.
	spinetoram (Radiant SC)	4.25-8.0 oz	28	1.5-3.0 oz for early season suppression.
	zeta-cypermethrin (Mustang Max)	1.28-1.92 oz	14	**RESTRICTED USE.** Do not graze or feed cotton for forage.

Plant Bugs

Prebloom: Prior to bloom, plant bugs, or Lygus, damage cotton by feeding on tender terminals and small squares causing squares to turn black and abort. Excessive square loss can reduce yields or slow plant maturity. In pre-blooming cotton, Lygus has required treatment on an average of only 6 percent of the cotton acreage in North Carolina over the past 8 years, and on only a few hundred acres in Virginia. The best way to determine the need for pre-bloom plant bug control is to assess square retention rates (percent missing squares). Treatment should be considered if square retention drops below 80% (see threshold table below) and plant bugs are still active.

After blooming: Once blooming begins, plant bugs continue feeding on smaller squares and blooms, both of which can cause 'dirty blooms' (white blooms with brown pollen anthers or brown-streaked petals). The presence of dirty blooms indicates that plant bugs are, or have very recently been, active. Levels at or above 15% dirty bloom indicate a large and active plant bug population and the need for sampling of bolls for damage (see threshold table below).

Boll damage: Once bolls are formed, plant bugs prefer feeding on small bolls up to 3 weeks old. Damage to bolls can range from warts or calluses on the insides of boll walls, to small areas of stain lint, to deformed and rotting fruit that is due to direct feeding on seed. This damage is identical to damage caused by stink bugs. Virginia studies indicate that treatments may be justified if boll damage by plant bugs (and/or stink bugs) exceeds 15% of a random sample of quarter-sized bolls (see threshold table below).

Untreated or minimally treated cotton, such as Bollgard cotton, is most susceptible to plant bug damage. Also, fields treated later in the season are open to invasion for a longer period of time.

Table 4.69 - Sampling for Plant Bugs and Thresholds in Cotton

Prebloom	below 80% square retention and plant bugs active
After blooming	15% dirty blooms indicates the presence of an active population 8 plant bugs per 100 sweeps indicates a large, active population
Boll damage	15% or more damaged quarter-sized bolls (up to 14 days old) and plant bugs active

Table 4.70 - Recommended Insecticides for Plant Bug Control

Treatment	Insecticide (Formulation)	Amount product per acre	Time limits: days before harvest	Remarks
Foliar	acephate (Orthene 97)	4.0-16.0 oz	21	**General** Treatment not recommended if square retention is in excess of 80%. If square retention is less than 80%, confirmation of threshold levels of plant bugs should be met prior to treatment. Although cotton fields exceeding the treatment threshold for plant bugs are relatively rare, fields adjacent to Irish potatoes, weed fields, and other sources of plant bugs in eastern counties may be at higher risk of plant bug injury.
	acetamiprid (Assail 70WP)	1.1-2.3 oz	28	
	beta-cyfluthrin (Baythroid XL)	1.6-2.6 oz	0	**RESTRICTED USE.**
	bifenthrin (Brigade 2EC)	2.6-6.4 oz	14	**RESTRICTED USE.**
	chlorpyrifos (Lorsban 4EC)	6.1 oz	14	
	chlorpyrifos+ lambda-cyhalothrin (Cobalt Advanced)	16.0-38.0 oz	21	**RESTRICTED USE.** Do not allow meat or dairy animals to graze in treated areas. Do not feed gin trash or treated forage to meat or dairy animals.
	clothianidin (Belay)	3.0-4.0 oz	21	
	dicrotophos (Bidrin XP)	4.0-6.0 oz	30	**RESTRICTED USE.**
	dinotefuran (Venom 20SG)	0.44-0.67 lb	14	
	esfenvalerate (Asana XL 0.66EC)	5.8-9.6 oz	21	**RESTRICTED USE.**
	imidacloprid (Admire Pro)	0.9-1.7 oz	14	
	lambda-cyhalothrin (Karate EC) (Karate Z) (Warrior T)	2.56-3.84 oz 1.28-1.92 oz 2.56-3.84 oz	21 21 21	**RESTRICTED USE.**
	lambda-cyhalothrin + thiamethoxam (Endigo ZC)	3.5-5.5 oz	21	**RESTRICTED USE.** Do not graze livestock in treated areas.
	chlorantraniliprole + lambda-cyhalothrin (Besiege)	6.5-12.5 oz	21	**RESTRICTED USE.** Do not graze livestock in treated areas.
	methomyl (Lannate 2.4 LV) (Lannate 90SP)	0.75 pt 0.5 lb	15 15	**RESTRICTED USE.**

Table 4.70 - Recommended Insecticides for Plant Bug Control (cont.)

Treatment	Insecticide (Formulation)	Amount product per acre	Time limits: days before harvest	Remarks
	oxamyl (Vydate C-LV)	12.7-17.0 oz	14	**RESTRICTED USE.**
	thiamethoxam (Centric 40WG)	1.25-2.0 oz	21	
	zeta-cypermethrin (Mustang Max)	2.64-3.6 oz	14	**RESTRICTED USE.**

Tobacco Budworm/Cotton Bollworm

Bollworms (corn earworms) occur primarily on field corn during their first two generations. Third generation moths usually emerge in large numbers from mid-July to early August when corn is drying and fly to more attractive blooming cotton.

Regular weekly scouting for the bollworm and its cousin, the tobacco budworm, should begin in early to mid-June. Weekly scouting is adequate until egg laying or light-trap catches increase. Fields should then be scouted twice a week, with the emphasis placed upon finding eggs, until insecticide treatments begin. After that, a 4- to 7-day scouting schedule will usually suffice. A 4- to 5-day scouting schedule is suggested for conventional pyrethroid rates and a 6- to 7-day schedule for high rates. Once the egg threshold has been met and treatments made, the primary focus of scouting shifts toward finding small bollworms feeding on squares and bolls, including those under bloom tags.

Tobacco budworm adults are not readily attracted to blacklight traps and sometimes begin laying eggs on cotton prior to the time at which the bollworm egg threshold has been met; occasional fields may reach a 3 percent larval threshold prior to bollworm treatment initiation. Under these circumstances, tobacco budworm pheromone trap deployment and correct sight identification of adult tobacco budworms can assist in recognition of this situation.

After the upper bolls that will be harvested have become difficult to cut with a pocket knife (approximately three weeks after bloom), they are normally safe from bollworm attack. Bollworm scouting can normally be stopped at that time—usually in late August to early September. Spot scouting for fall armyworms and European corn borers should continue through early September, especially in fields of late maturing cotton or in green areas.

Table 4.71 - Bollworm and Tobacco Budworm Thresholds in Cotton

Cotton Type	Threshold	Remarks
Conventional Cotton		
Prebloom	8 bollworms/100 terminals or 6 bollworms/100 squares	Limiting this treatment to one well-timed pyrethroid application is strongly recommended.
Egg	10+ eggs/100 terminals or 2 eggs/100 fruiting forms	After the onset of the major (third generation) bollworm moth flight.
Post-bloom larval	3 live worms/100 terminals, or 3 percent fresh damage to squares, blooms,or bolls	Usually after the egg threshold has been employed; also used after blooming begins and before major bollworm flight, particularly if tobacco budworms are present.
Bollgard Cotton		
Egg	75 to 100 eggs/100 terminals 15 to 20 eggs/100 blooms or bloom tags	Applies only following a period of high egg deposition. Should not be used within 1 week of an insecticide application.

Table 4.71 - Bollworm and Tobacco Budworm Thresholds in Cotton (cont.)

Cotton Type	Threshold	Remarks
Larval	3 second-stage (1/8 inch or larger) bollworms/100 squares or bolls or 2 second-stage bollworms on 2 consecutive scouting trips or 1 second-stage bollworm on 3 consecutive scouting trips	Use against the major bollworm generation. Pay particular attention to bollworms in or under yellow, pink, or dried blooms, but only sample in proportion to their occurrence.
Damage	3 to 6 percent significantly damaged squares (would cause squares to abort) or bolls	

Table 4.72 - Recommended Insecticides for Bollworm Control

Treatment	Insecticide (Formulation)	Amount product per acre	Time limits: days before harvest	Remarks
Foliar (pyrethroids)	beta-cyfluthrin (Baythroid XL)	1.6[1]-2.6[2] oz	0	**RESTRICTED USE.**
	bifenthrin (Brigade 2EC)	3.2[1]-6.4[2] oz	14	**RESTRICTED USE.**
	esfenvalerate (Asana XL 0.66EC)	5.8[1]-9.7[2] oz	21	**RESTRICTED USE.**
	fenpropathrin (Danitol 2.4EC)	10.6[1]-16.0[2] oz	21	**RESTRICTED USE.**
	lambda-cyhalothrin (Karate EC) (Karate Z) (Warrior T)	 3.2[1]-5.1[2]oz 1.6[1]-2.56[2] oz 3.2[1]-5.1[2] oz	 21 21 21	**RESTRICTED USE.**
	lambda-cyhalothrin + thiamethoxam (Endigo ZC)	3.5-5.5 oz	21	**RESTRICTED USE.** Do not graze livestock in treated areas.
	chlorantraniliprole + lambda-cyhalothrin (Besiege)	6.5-12.5 oz	21	**RESTRICTED USE.** Do not graze livestock in treated areas.
	zeta-cypermethrin (Mustang Max)	2.64[1]-3.6[2] oz	14	**RESTRICTED USE.**
Foliar (others)	*Bacillus thuringiensis* (DiPel ES)	1.0-2.0 pt	0	For pyrethroid resistant corn earworms (bollworms) when tank mixed with a pyrethroid at a labeled use rate.
	chlorpyrifos + lambda-cyhalothrin (Cobalt Advanced)	16.0-38.0 oz	21	**RESTRICTED USE.** Do not allow meat or dairy animals to graze in treated areas. Do not feed gin trash or treated forage to meat or dairy animals.
	flubendiamide (Belt SC)	2.0-3.0 oz	28	
	indoxacarb (Steward EC)	11.3 oz	14	

[1]Standard rate
[2]High rate

Table 4.72 - Recommended Insecticides for Bollworm Control (cont.)

Treatment	Insecticide (Formulation)	Amount product per acre	Time limits: days before harvest	Remarks
	methomyl			**RESTRICTED USE.**
	(Lannate 2.4LV)	1.5 pt	15	
	(Lannate 90SP)	0.5 lb	15	
	rynaxypyr (Coragen)	3.5-7.0 oz	21	
	spinetoram (Radiant SC)		28	
	(prebloom)	2.8-8.0 oz		
	(postbloom)	4.25-8.0 oz		
	spinosyn (Blackhawk)	1.6-3.2 oz	28	For second-generation tobacco budworms, 1.6 oz is adequate; for post-bloom bollworms, use the 3.2 oz rate.
	chlorantraniliprole (Prevathon)	14.0-27.0 oz	21	

[1]Standard rate
[2]High rate

European Corn Borer

European Corn Borer (ECB) larvae damage cotton by feeding on large bolls from early August through mid-September. In rank or late-maturing cotton, this damage can be significant. An earlier tunneling type of damage may occur within stems and leaf petioles, usually in mid-July through late August. Although this damage looks serious, with wilting and eventual death of the tissue above the feeding site, it causes no known economic loss. The major moth flight for the ECB often occurs a few days to three weeks later than the major bollworm flight. The female moths lay egg masses that contain 15-75 eggs each. These small, flat, scale-like masses are deposited on the underside of cotton leaves deep within the canopy. At first, early instars feed within the leaf petioles and stems, but they begin to enter and feed upon large bolls, sometimes within 48 hours, particularly after mid-August. Although the caterpillars of this species generally do not feed as extensively within the bolls as do bollworms, most bolls are destroyed.

Controlling ECB damage presents an unusual problem. The flat egg masses are almost impossible to find, even by the trained scouts searching heavily infested fields. By the time the larvae are found feeding on or within bolls, insecticide treatments are usually ineffective. Thus scouting for this pest benefits the producer little during the present year. However, scouting to detect the caterpillars is advised. If small larvae are present (3 percent or more), treatment may be prescribed if an active flight is confirmed. This situation may indicate a late, rank cotton crop that should be avoided in the future.

No control threshold has been developed since finding the egg masses is virtually impossible, and live caterpillars are spotted too late to achieve effective control. Growers must depend on another observation as a trigger for directing insecticide against the pest. Fortunately, because egg laying of the corn earworm usually occurs somewhat earlier than the ECB flight, employing the egg threshold for bollworm control usually works well for ECB if treatments are extended into the ECB infestation period. An insecticide should be selected that is effective against both insects. If the major part of the ECB flight occurs after the bollworm flight has subsided and spraying has been completed, fields can be particularly susceptible. Under this condition, 3-6 total applications may be required for adequate suppression. This approach is recommended only where late rank growth points toward a high probability of ECB damage. Finding moths of this species in local light or pheromone traps, or flushing the adults from around or within cotton fields can help confirm the need for this extended treatment.

Table 4.73 - Recommended Insecticides for European Corn Borer Control

Treatment	Insecticide (Formulation)	Amount product per acre	Time limits: days before harvest	Remarks
Foliar	beta-cyfluthrin (Baythroid XL)	1.6-2.6 oz	0	**RESTRICTED USE.**
	bifenthrin (Brigade 2EC)	1.3-6.4 oz	14	**RESTRICTED USE.**
	chlorpyrifos + lambda-cyhalothrin (Cobalt Advanced)	16.0-38.0 oz	21	**RESTRICTED USE.** Do not allow meat or dairy animals to graze in treated areas. Do not feed gin trash or treated forage to meat or dairy animals.
	flubendiamide (Belt SC)	2.0-3.0 oz	28	
	lambda-cyhalothrin (Karate EC) (Karate Z) (Warrior T)	3.2 oz 1.6 oz 3.2 oz	21 21 21	**RESTRICTED USE.**
	lambda-cyhalothrin + thiamethoxam (Endigo ZC)	3.5-5.5 oz	21	**RESTRICTED USE.** Do not graze livestock in treated areas.
	chlorantraniliprole + lambda-cyhalothrin (Besiege)	6.5-12.5 oz	21	**RESTRICTED USE.** Do not graze livestock in treated areas.
	rynaxypyr (Coragen)	3.5-7.0 oz	21	
	spinetoram (Radiant SC)	2.8-8.0 oz	28	
	zeta-cypermethrin (Mustang Max)	2.64-3.6 oz	14	**RESTRICTED USE.**

Stink Bugs

Stink bugs typically begin invading cotton fields in mid-July and build to damaging levels in August. The insecticide applications for the bollworm usually keep stink bug numbers below damaging levels. Problems with stink bugs usually only develop where the bollworm applications are limited or not applied at all. Stink bugs damage cotton by puncturing the carpal walls of bolls and feeding on the soft developing seeds. If bolls are small when feeding occurs, the boll will dry up, turn brown and either remain on the plant or be shed. Bollrot pathogens are sometimes introduced when feeding is concentrated on medium and larger bolls, resulting in portions of the boll being destroyed, hard-lock, and lower grades. External feeding damage appears as small round purplish depressions about the size of a pencil point. The feeding sites are slightly larger but closely resemble the spots that naturally appear on maturing bolls. Stink bug feeding sites can be confirmed by slicing the bolls open under the depressions. The damaged bolls will have a brown stain (bollrot organisms) in the seed area under these spots.

Stink bugs often occur in a clumped distribution within a cotton field; therefore, at least 10 samples should be taken throughout a field to determine if a problem exists. Both sweep nets and shake cloths can be used to sample for stink bugs, but our research is showing that of the two, shake cloths tend to do a better job. A sweep net sample should consist of 25 hard sweeps using a pendulum-like motion with enough speed and force to end up with some leaves and small bolls in the net. An average of one stink bug per 25 sweeps could indicate a problem. A shake cloth sample should consist of placing a 3-foot long cloth on the ground between the rows, bending the bordering plants on either side (first one side, then the other) and vigorously shaking those plants to dislodge any insects. An average of one plant bug per 6 row feet (one 3-foot long shake cloth sample, both sides of the cloth) could indicate a problem.

Research in the southeast has resulted in a dynamic threshold based on percent of bolls injured by stink bug feeding, that changes with week after first bloom (see below).

Table 4.74 - Sampling for Stink Bugs and Thresholds in Cotton	
Indicates presence	an average of 1 per 6 row feet using a 3-foot shake cloth
	an average of 1 per 25 sweeps using a 15-inch diameter sweep net
Boll damage	Week of bloom 1 = 50% internal boll damage; week 2 = 30%; weeks 3, 4 and 5 = 10%; week 6 = 20%; week 7 =30%; week 8 = 50%.

Table 4.75 - Recommended Insecticides for Stink Bug Control

Treatment	Insecticide (Formulation)	Amount per acre product	Time limits: days before harvest	Remarks
Foliar	acephate (Orthene 97)	8.0-12.0 oz	21	Do not feed treated forage or hay to livestock or allow animals to graze treated areas. For brown and green stink bugs.
	chlorpyrifos + lambda-cyhalothrin (Cobalt Advanced)	22.0-38.0 oz	21	**RESTRICTED USE.** Do not allow meat or dairy animals to graze in treated areas. Do not feed gin trash or treated forage to meat or dairy animals.
	clothianidin (Belay)	3.0-4.0 oz	21	Suppression only
	dicrotophos (Bidrin XP)	4.0-6.0 oz	30	**RESTRICTED USE.** For brown and green stink bugs.
	imidacloprid (Admire Pro)	0.9-1.8 oz	14	Suppression only
	imidacloprid + beta-cyfluthrin (Leverage 360)	3.2 oz	14	**RESTRICTED USE.** Do not graze treated fields after application.
	lambda-cyhalothrin + thiamethoxam (Endigo ZC) (brown stink bug) (green stink bug)	5.5 oz 3.5-5.5 oz	21	**RESTRICTED USE.** Do not graze livestock in treated areas.
	chlorantraniliprole + lambda-cyhalothrin (Besiege)	6.5-12.5 oz	21	**RESTRICTED USE.** Do not graze livestock in treated areas.
	pyrethroids (see product labels)			**RESTRICTED USE.** Pyrethroids, when applied two or more times against bollworms, usually provide adequate suppression of green stink bugs.
	thiamethoxam (Centric 40WG)	2.0 oz	21	

Aphids

A number of beneficial insects and fungal diseases can hold aphid numbers below economic threshold levels. By limiting early season insecticide applications, the grower is allowing beneficial insect populations to build, decreasing the chances of developing resistant aphid populations (observed in North Carolina and Virginia), and possibly reducing or eliminating the need for insecticide applications later in the season. An aphid rating level of four or more just before boll opening, plus the presence of honeydew, is probably a good indicator of the need to treat.

Table 4.76 - Aphid Rating Scale	
0	No aphids
1	Occasional plants with low numbers of aphids
2	Plants with low numbers common; heavily infested plants rare; honeydew visible occasionally
3	Most plants with some aphids; occasional plants heavily infested; honeydew easily visible in most areas of the field
4	Heavily infested plants common; aphids clumped on upper leaves
5	Many heavily infested plants

Table 4.77 - Recommended Insecticides for Aphid Control

Treatment	Insecticide (Formulation)	Amount product per acre	Time limits: days before harvest	Remarks
Foliar	acetamiprid (Assail 70WP)	0.6-1.1 oz	28	
	bifenthrin (Brigade 2EC)	2.6-6.4 oz	14	**RESTRICTED USE.**
	clothianidin (Belay)	3.0-4.0 oz	21	
	dicrotophos (Bidrin 8)	4.0 oz	30	**RESTRICTED USE.**
	flupyradifurone (Sivanto)	7.0-10.5 oz	14	
	imidacloprid (Admire Pro)	0.9-1.7 oz	14	Aphid control with insecticides should be attempted only as a last resort, particularly in early season (before major bollworm moth flight).
	thiamethoxam (Centric 40WG)	1.25-2.0 oz	21	

Table 4.78 - Recommended Insecticides for Aphid/Bollworm Control

Treatment	Insecticide (Formulation)	Amount product per acre	Time limits: days before harvest	Remarks
Foliar	cyfluthrin + imidacloprid (Leverage 2.7)	3.0-3.75 oz	21	**RESTRICTED USE.**
	lambda-cyhalothrin + thiamethoxam (Endigo ZC)	3.5-5.5 oz	21	**RESTRICTED USE.** Do not graze livestock in treated areas.

Spider Mites

Spider mites can occur during any time of the season but are favored by dry weather and/or the removal of alternative hosts. Mite damage first appears as a slight yellowing of the leaves, which later changes to a purplish or bronze color and is usually associated with webbing. Damage occurs especially in spots or on field edges but widespread defoliation is not uncommon if favorable conditions persist.

Spider mites can be checked while scouting for other insect pests. Active mite populations should be confirmed before applications are made. Delaying treatment should also be considered if rainy, humid conditions are predicted in the near future. Rainy, humid conditions favor a fungus that preys upon mites and may greatly reduce mite numbers.

Table 4.79 - Recommended Insecticides for Spider Mite Control

Treatment	Insecticide (Formulation)	Amount product per acre	Time limits: days before harvest	Remarks
Foliar	bifenthrin (Brigade 2EC)	3.8-6.4 oz	14	**RESTRICTED USE.**
	dicofol (Kelthane MF 4E)	1.5-3.0 pt	30	Do not make more than 2 applications/season. Do not feed cotton stalks or trash to meat or dairy animals.
	etoxazole (Zeal)	0.66-1.0 oz	28	Zeal is predominantly an ovicide (egg activity) and larvicide and should be applied early in the life cycle of mites.
	fenpropathrin (Danitol 2.4EC)	10.6-16.0 oz	21	**RESTRICTED USE.**
	propargite (Comite 6.55EC[1])	1.0-2.0 pt	14	
	spiromesifen (Oberon 4SC)	3.0 oz (early season) 4.0-8.0 oz (mid-late season)	30	

[1]not after bolls begin to open

Loopers

Cabbage and soybean loopers rarely damage cotton because they prefer foliage, are prone to virus attack and occur sporadically. Scouting for this pest, which normally appears late season, is done by observing foliage during scouting for other pests. As a general rule, if defoliation exceeds 30% in cotton with a significant portion (25% or more) of the bolls still immature and filling out, treatment may be needed. Soybean loopers are difficult to control with insecticides. Because foliage feeding typically begins at the bottom of the cotton plant and proceeds upward and outward, foliage feeding may be beneficial in preharvest cotton that has begun to open. The brownish larval frass (droppings) can be plentiful and temporarily stain opening cotton; however, this is not thought to be an economic problem. Since loopers are usually controlled by naturally occurring diseases and chemical controls are sometimes not effective due to resistance, recommendations will be available on a year to year basis through your local extension office.

Fall Armyworms

The presence of fall armyworms (FAW) and their damage is recorded as part of bollworm scouting. Additional samples are unnecessary. FAW migrate into Virginia from the south so numbers are generally highest in the southern part of the state. FAW prefer blooms and bolls of all sizes. These caterpillars can be extremely damaging if present in moderate numbers and can become established late in the season. They can feed on mature bolls normally resistant to bollworm penetration. Because FAW are not always controlled effectively by the same insecticides as bollworms, it is very important that they be identified correctly. Also, because fall armyworms are difficult to control with insecticides, treatments are best applied at an early boll bract feeding stage. Fall armyworms have a more difficult time becoming established under a bollworm spray regime with certain pyrethroids.

Table 4.80 - Recommended Insecticides for Fall Armyworm Control

Treatment	Insecticide (Formulation)	Amount product per acre	Time limits: days before harvest	Remarks
Foliar	chlorpyrifos (Lorsban 4E)	1.0-2.0 pt	14	Various rates and combinations may be recommended for armyworm control, depending upon the phenology and the age distribution and population levels of larvae. Pyrethriods will provide some control of fall armyworms hatching from egg masses. Fall armyworms may have more difficulty becoming established following Karate or Capture treatments used for bollworm control.
	chlorpyrifos + lambda-cyhalothrin (Cobalt Advanced)	16.0-38.0 oz	21	**RESTRICTED USE.** Do not allow meat or dairy animals to graze in treated areas. Do not feed gin trash or treated forage to meat or dairy animals.
	chlorantraniliprole + lambda-cyhalothrin (Besiege)	6.5-12.5 oz	21	**RESTRICTED USE.** Do not graze livestock in treated areas.
	flubendiamide (Belt SC)	2.0-3.0 oz	28	
	indoxacarb (Steward EC)	9.2-11.3 oz	14	Various rates and combinations may be recommended for armyworm control, depending upon the phenology and the age distribution and population levels of larvae. Pyrethriods will provide some control of fall armyworms hatching from egg masses. Fall armyworms may have more difficulty becoming established following Karate or Capture treatments used for bollworm control.
	lambda-cyhalothrin + thiamethoxam (Endigo ZC)	3.5-5.5 oz	21	**RESTRICTED USE.** Do not graze livestock in treated areas.
	methomyl (Lannate 2.4LV)	1.5 pt	15	Various rates and combinations may be recommended for armyworm control, depending upon the phenology and the age distribution and population levels of larvae. Pyrethriods will provide some control of fall armyworms hatching from egg masses. Fall armyworms may have more difficulty becoming established following Karate or Capture treatments used for bollworm control.
	(Lannate 90SP)	0.5 lb	15	
	methoxyfenozide (Intrepid 2F)	4.0-10.0 oz	14	
	rynaxypyr (Coragen)	3.5-7.0 oz	21	
	spinetoram (Radiant SC)	4.25-8.0 oz	28	

Table 4.80 - Recommended Insecticides for Fall Armyworm Control (cont.)

Treatment	Insecticide (Formulation)	Amount product per acre	Time limits: days before harvest	Remarks
	spinosyn (Blackhawk)	2.4-3.2 oz	28	Various rates and combinations may be recommended for armyworm control, depending upon the phenology and the age distribution and population levels of larvae. Pyrethriods will provide some control of fall armyworms hatching from egg masses. Fall armyworms may have more difficulty becoming established following Karate or Capture treatments used for bollworm control.
	chlorantraniliprole (Prevathon)	14.0-27.0 oz	21	

Table 4.81 - Recommended Insecticides for Beet Armyworm Control

Treatment	Insecticide (Formulation)	Amount product per acre	Time limits: days before harvest	Remarks
	flubendiamide (Belt SC)	2.0-3.0 oz	28	
	indoxacarb (Steward EC)	9.2-11.3 oz	14	
	methoxyfenozide (Intrepid 2F)	4.0-10.0 oz	14	
	rynaxypyr (Coragen)	3.5-7.0 oz	21	
	spinetoram (Radiant SC)	4.25-8.0 oz	28	
	chlorantraniliprole + lambda-cyhalothrin (Besiege)	6.5-12.5 oz	21	**RESTRICTED USE.** Do not graze livestock in treated areas.
	spinosyn (Blackhawk)	2.4-3.2 oz	28	
	chlorantraniliprole (Prevathon)	14.0-27.0 oz	21	

Table 4.82 - Recommended Insecticides for Cutworm Control

Treatment	Insecticide (Formulation)	Amount product per acre	Time limits: days before harvest	Remarks
Foliar	acephate (Orthene 97)	12.0 oz	21	Control is most effective when ground application is made in the evenings and sprays are directed toward the base and lower portion of plants.
	beta-cyfluthrin (Baythroid XL)	0.8-1.6 oz	14	**RESTRICTED USE.**
	bifenthrin (Brigade 2EC)	2.6-6.4 oz	14	**RESTRICTED USE.**
	esfenvalerate (Asana XL 0.66EC)	5.8 oz	21	**RESTRICTED USE**.
	fenpropathrin (Danitol 2.4EC)	8.0 oz	21	**RESTRICTED USE.**
	lambda-cyhalothrin (Karate EC)	1.92 oz	21	**RESTRICTED USE.**
	(Karate Z)	0.96 oz	21	
	(Warrior T)	1.92 oz	21	
	zeta-cypermethrin (Mustang Max)	1.28-1.92 oz	14	**RESTRICTED USE.**

Beneficial Insects

About a dozen beneficial insects are common in Virginia cotton. Ambush bugs, big-eyed bugs, minute pirate bugs, green lacewings, two species of ladybird beetles, and several types of spiders are examples. They are of two types: 1) predators that prey upon an insect pest, or 2) parasites that live within the host insect. These insects, particularly the predators, reduce the number of eggs and larvae of bollworms, caterpillars and aphids. Because these allies lessen the impact of pest insects, common sense dictates that producers use them as a management tool. Their presence often means that growers can delay and, on occasion, eliminate some insecticide applications.

Many complex factors are involved in determining just how many of each beneficial insect species are needed to influence a given level of pests. Therefore, it is usually not possible to asses the value of these insects except in a very general way. If relatively high numbers of beneficial insects are eating a large portion of aphids or bollworm eggs and larvae, the treatment threshold will be reached later than would otherwise be the case, reducing the number of insecticide applications needed. However, the rapid increase in pest populations, the third generation of bollworms, will often overwhelm the beneficial population and applications become necessary. The careful observation of sound economic thresholds offers the producer the best odds of balancing beneficial insect numbers against damaging insects.

EXHIBIT 43

Intrinsik Environmental Sciences (US) Inc.
41 Campus Drive, Suite 202
New Gloucester, Maine. 04260
Ph: 207-926-1065 Fax: 207-926-1067

DWAYNE R. J. MOORE, Ph.D.

Senior Vice President and Senior Scientist

Dr. Dwayne Moore has a B.Sc. in Biology from the University of Western Ontario, and a M.Sc. and Ph.D. in wetland community ecology from the University of Ottawa. After graduating, he worked for six years at Environment Canada, the first two years developing environmental quality guidelines for industrial chemicals, and the last four years conducting ecological risk assessments for priority substances in Canada. He was with the Cadmus Group for seven and one half years, first as a Senior Associate and then as a Principal. Dr. Moore joined Intrinsik Environmental, Inc. as a Senior Scientist and Vice President in March, 2004.

Dr. Moore has considerable expertise in ecological risk assessment, wildlife exposure modeling, development of environmental quality guidelines and criteria, community ecology, statistics, uncertainty analysis, and analysis of toxicity data. Since becoming a consultant in 1996, Dr. Moore has managed hundreds of projects for Canadian, U.S. and international clients in government and industry and participated in many others. He led the development of probabilistic exposure and risk models for birds exposed to granular and flowable pesticides. Dr. Moore and his team have completed numerous refined aquatic and/or wildlife risk assessments for pesticides including, for example, 2,4-D, aldicarb, atrazine, bifenthrin, brodifacoum, chlorpyrifos, carbofuran, carbosulfan, dimethoate, diphacinone, glufosinate, linuron and malathion. Dr. Moore has led or is currently leading assessments being conducted for threatened and endangered species in the United States for a variety of pesticides. Previously, Dr. Moore led the ecological risk assessment for the Housatonic River site in western Massachusetts on behalf of the US Environmental Protection Agency (EPA). The major focus for the Housatonic River site was risks to aquatic life and wildlife exposed to PCBs, dioxins and furans in the sediments. Dr. Moore also co-led the ecological risk assessment for the Calcasieu Estuary in Louisiana on behalf of the US EPA. This site had a wide array of contaminants in sediment and water including PCBs, dioxins, furans, lead, mercury, PAHs and solvents. Dr. Moore has participated in numerous other contaminated site risk assessments including Anniston, AL, Oak Ridge, TN, Sudbury, ON and Teck Cominco, BC.

EDUCATION

1990	Ph.D., Wetland Community Ecology, University of Ottawa, Ottawa, Ontario.
1985	M.Sc., Wetland Community Ecology, University of Ottawa, Ottawa, Ontario.
1983	B.Sc. Plant Sciences, Honours, University of Western Ontario, London, Ontario (Awarded Departmental Gold Medal in 1983)

AREAS OF SCIENTIFIC INTEREST

- Ecological Risk Assessment
- Probabilistic Risk Assessment
- Pesticides
- Contaminated Sites
- Environmental Quality Guidelines and Criteria
- Exposure Modeling, Ecotoxicology, Uncertainty Analysis and Statistics
- Threatened and Endangered Species

EMPLOYMENT HISTORY

2004-Present **Intrinsik Environmental Sciences, New Gloucester, Maine** (formerly operating as Cantox Environmental Inc.)
Senior Vice President and Senior Scientist

Company and project management; lead and participate in ecological risk assessments that predict or evaluate the potential impacts of industrial chemicals and pesticides on aquatic and terrestrial ecosystems; develop environmental quality guidelines and criteria; teach courses; litigation support.

1996-2003 **The Cadmus Group Inc., Ottawa, Ontario**
Senior Associate

1989-1996 **Environment Canada, Gatineau, Quebec**

Water Quality Branch (1989-1991); Commercial Chemicals Evaluation Branch (1991-1996)

PROFESSIONAL BACKGROUND

Co-chair, SETAC Pellston Workshop on the Use of Uncertainty Analysis in Ecological Risk Assessment (August, 1995)

Co-editor, "Uncertainty Analysis in Ecological Risk Assessment" (1998, SETAC Press)

Editorial Board, Environmental Toxicology and Chemistry (2000 to 2003)

Editorial Board, Human and Ecological Risk Assessment (1995 to 2004)

Member, Society of Environmental Toxicology and Chemistry (1989 to Present)

Invited Participant, SETAC Pellston Workshops on Problem Formulation in Ecological Risk Assessment (April, 2010), Re-evaluating Water Quality Criteria (July, 1998), Ecological Risk Assessments Involving Multiple Stressors (September, 1997)

Invited Speaker, U.S. ACE/U.S. EPA/SMWG Joint Sediment Conference (October, 2004)

Peer Reviewer, Ecological Risk Assessment for the Hudson River (April, 2000)

Steering Committee Member for SETAC Pellston Workshop on Probabilistic Risk Assessments of Pesticides (February, 2002)

Steering Committee Member for SETAC Pellston Workshop on Designing a Decision Support System for Ecological Risk Assessment (August, 1994)

US EPA FIFRA Scientific Advisory Panel Member (1999, 2000, 2004)

US EPA Science Advisory Board Member (2006, 2008)

Member of CropLife America Ecological Risk Assessment Committee (2009 to present)

Member of CropLife America Ecotoxicology Work Group (2009 to present)

Invited Panel Member and Guest Speaker at CropLife America Science Forum on Uncertainty Analysis (2013)

Invited Panel Member and Guest Speaker at CropLife America Science Forum on Population Modeling (2014)

SELECTED ACHIEVEMENTS

- Currently Co-leading National Endangered Species Assessment for Chlorpyrifos for Dow AgroSciences and Participating in the National Endangered Species Assessments for Malathion for FMC Corporation and Diazinon for Adama.
- Led Aquatic Risk Assessment for Imidacloprid for Bayer CropScience and Currently Leading Aquatic Risk Assessment for Clothianidin for Bayer CropScience and Valent.
- Recently Provided Litigation Support for Neonicotinoid Pesticides for Bayer Cropscience, Syngenta and Valent.
- Recently Provided Litigation Support for a Pesticide Registrant in Florida.
- Recently Provided Litigation Support for Cheminova for risks of Malathion and Dimethoate to Endangered Pacific Salmon Populations.
- Recently Led FIFRA Avian Risk Assessment for Chlorpyrifos for Dow AgroSciences.
- Recently Led Development of a Level of Concern for Aquatic Biota Exposed to Atrazine on Behalf of Syngenta.
- Co-leading FIFRA Ecological Risk Assessment and National Endangered Species Assessment for Glufosinate for Bayer CropScience.
- Leading Ecological Risk Assessment for Application of a Rodenticide to the Farallon Islands on Behalf of Island Conservation.
- Co-Led Regional Ecological Risk Assessment and Regional Endangered Species Assessment for New 2,4-D Formulation for Dow AgroSciences.
- Developed and Evaluated Model Performance of an Avian Risk Assessment Model for Seed Treatment Pesticides for Monsanto.
- Provided Litigation Support for Dow AgroSciences for Risks of Chlorpyrifos to Endangered Pacific salmon Populations.
- Led Risks of Pesticide Mixtures Project for CropLife America.

- Led Canadian Refined Ecological Risk Assessment for Malathion for Cheminova.
- Led Refined Avian Risk Assessment for Carbofuran and Carbosulfan Use in Colombia and Ecuador for FMC Corporation.
- Led Development of Generic Problem Formulation for Assessments of Pesticide Risks to the Endangered California Red-legged Frog on Behalf of CropLife America.
- Led Probabilistic Ecological Risk Assessment for Chlorpyrifos for Pest Management Regulatory Agency in Canada.
- Led and Co-Authored Ecological Risk Assessment for Aldicarb for Bayer CropScience.
- Developed and Evaluated Model Performance of an Avian Risk Assessment Model for Granular Pesticides for Bayer CropScience.
- Provided Litigation Support for Chinook Pipelines for Risks of an Accidental Tapwater Release to Pincher Creek, Alberta.
- Led Avian Risk Assessment for Carbofuran for FMC.
- Developed and Evaluated Model Performance of an Avian Risk Assessment Model for Flowable Pesticides for FMC.
- Taught Numerous Statistics Courses to Groups at Environment Canada, U.S. EPA, Pesticide Companies and Many Others.
- Led and Co-Authored Guidance Manual for Development of Ideal Performance Standards for Pesticides in Canada.
- Led and Co-Authored Development of Ideal Performance Standards for Protection of Aquatic Life for 8 Pesticides on Behalf of Environment Canada.
- Authored Guidance Chapter on Performance of Probabilistic Risk Assessments for Estimating Risk to Human Health at Contaminated Sites on Behalf of Health Canada.
- Led Ecological Risk Assessment for the Housatonic River, Massachusetts for U.S. Environmental Protection Agency.
- Evaluated Model Performance of 6 QSAR Models for Environment Canada.
- Determined Inter - and Intra-laboratory Variability of Whole Effluent Toxicity Test Results.
- Co-led Ecological Risk Assessment for the Calcasieu Estuary, Louisiana for U.S. Environmental Protection Agency.
- Led Development of Ambient Water Quality Criterion for Mercury for Water Environment Research Federation.
- Led Ecological Risk Assessment for East Fork Poplar Creek, Tennessee for U.S. Department of Energy.
- Co-led Project to Determine Factors Controlling Bioaccumulation of Mercury in Fish in the American Southeast for U.S. Environmental Protection Agency.
- Co-authored Guidance Manual on Probabilistic Risk Assessment for the American Chemistry Council (ACC) and its European Equivalent (CEFIC).
- Co-authored Guidance Manual for Assessments of New Substances, with Mark Bonnell and Scott Teed, for Environment Canada.
- Co-authored Canadian Water Quality Guideline Documents for Various Compounds.
- Led and Co-authored Guidance Manual for Ecological Risk Assessments of Priority Substances under the Canadian Environmental Protection Act.
- Co-authored Protocol for Development of Water Quality Guidelines for the Protection of Freshwater Aquatic Life in Canada.

PUBLICATIONS

BOOKS

Moore, D.R.J., W.J. Warren-Hicks, S. Qian, A. Fairbrother, T. Aldenberg, T. Barry, R. Luttik and H.-T Ratte. 2010. Uncertainty analysis using classical and Bayesian hierarchical models. In Application of Uncertainty Analysis to Ecological Risks of Pesticides, Warren-Hicks, W.J. and A.V. Hart (eds.). SETAC Press, Pensacola, FL. pp. 123-141.

Ferson, S., **D.R.J. Moore,** P.J. Van den Brink, T.L. Estes, K. Gallagher, R. O'Connor and F. Verdonck. 2010. Bounding uncertainty analyses. In Application of Uncertainty Analysis to Ecological Risks of Pesticides, Warren-Hicks, W.J. and A.V. Hart (eds.). SETAC Press, Pensacola, FL. pp. 89-122.

Joermann, G., T.W. La Point, L.A. Burns, J.P. Carbone, P.D. Delorme, S. Ferson, **D.R.J. Moore** and T.P. Traas. 2010. How to detect and avoid pitfalls, traps, and swindles. In Application of Uncertainty Analysis to Ecological Risks of Pesticides, Warren-Hicks, W.J. and A.V. Hart (eds.). SETAC Press, Pensacola, FL. pp. 155-163.

Hart, A.V., T. Barry, D.L. Fischer, J.M. Giddings, P. Hendley, G. Joermann, R. Luttik, **D.R.J. Moore,** M.C. Newman, E. Odenkirchen and J.L. Shaw. 2010. Conclusions. In Application of Uncertainty Analysis to Ecological Risks of Pesticides, Warren-Hicks, W.J. and A.V. Hart (eds.). SETAC Press, Pensacola, FL. pp. 165-175.

Moore, D.R.J., C.G. Delos, J.M. Giddings, D.J. Hansen, W.G. Landis, E.R. Mancini, B.L. McGee, K.R. Soloman, J.E. Toll, W. Wuerthele and W.J. Adams, 2003. Risk characterization. In Re-evaluation of the State of the Science for Water-Quality Criteria Development, Reiley, M.C., W.A. Stubblefield, W.J. Adams, D.M. Di Toro, P.V. Hodson, R.J. Erickson and F.J. Keating (eds.). SETAC Press, Pensacola, FL. pp. 119-142.

Moore, D.R.J. and S.M. Bartell. 2000. Estimating ecological risks of multiple stressors: Advanced methods and difficult issues. In Multiple Stressors in Ecological Risk and Impact Assessment: Approaches to Risk Estimation, Foran, J. and S. Ferenc (eds.). SETAC Press, Pensacola, FL. pp. 117-168.

Warren-Hicks, W.J. and **D.R.J. Moore** (eds.). 1998. Uncertainty Analysis in Ecological Risk Assessment. SETAC Press, Pensacola, FL. 277 p.

Landis, W.G., **D.R.J. Moore** and S. Norton. 1998. Ecological risk assessment: Looking in, looking out. In Pollution Risk Assessment and Management: A Structured Approach, Douben, P.E.T. (ed.). John Wiley and Sons, Chichester, U.K. pp. 273-309.

Biddinger, G., D. Gess, **D.R.J. Moore,** T. Natan, C.L. van Leeuwen and D. Winkelman. 1998. The problem formulation phase. In Development of an Ecological Risk Assessment Modelling System, Reinert, K. and S. Bartell (eds.). SETAC Press, Pensacola, FL. pp. 7-14.

Moore, D.R.J., R.L. Breton, P. Doyle, B.J. Elliott, K. Taylor and W.M. Windle. 1997. Ecological risk assessments of priority substances in Canada: Identification and resolution of difficult issues. In Environmental Toxicology and Risk Assessment: Modeling and Risk Assessment (6th Volume), ASTM STP 1317, Dwyer, F.J., T.R. Doane and M.L. Hinman (eds.). American Society for Testing and Materials, Philadelphia, PA. pp. 130-147.

Moore, D.R.J. and P.A. Keddy. 1989. Conservation of infertile wetlands: Planning and management priorities. In Wetlands: Inertia or Momentum? Federation of Ontario Naturalists, Don Mills, ON. pp. 391-398.

JOURNALS AND PERIODICALS

Moore, D.R.J., R. Berger and C. McGowan. 2015. The treatment, analysis and communication of uncertainty in the environmental risk assessment of aquatic organisms. Canadian Technical Report of Fisheries and Aquatic Sciences 3146.

Knopper, L.D., R.L. Breton, **D.R.J. Moore**, T. Hall and L. Bowers. 2015. The challenge: How can we improve the quality of ecotoxicology research to increase relevance and use in regulatory decision making? Business perspective. Environmental Toxicology and Chemistry 35(1):18-19.

Fairbrother, A., B. Hartl, B.K. Hope, J.J. Jenkins, Y.-W. Li and **D.R.J. Moore**. 2015. Risk management decisions for pesticides and threatened and endangered species: The role of uncertainty analysis. Human and Ecological Risk Assessment DOI: 10.1080/10807039.2015.1089400.

Moore, D.R.J., R.L. Breton, T.R. DeLong, S. Ferson, J.P. Lortie, D.B. MacDonald, R. McGrath, A.J Pawlisz, S.C. Svirsky, R.S. Teed, R.P. Thompson, T. Tucker and M. Whitfield Aslund. 2015. Ecological risk assessment for mink and short-tailed

shrew exposed to PCBs, dioxins and furans in the Housatonic River area. Integrated Environmental Assessment and Management 12(1):174-184.

Forbes, V.E., R. Brain, D. Edwards, N. Galic, T. Hall, J. Honegger, C. Meyer, **D.R.J. Moore**, D. Nacci, R. Pastorok, T.G Preuss, S.F. Railsback, C. Salice, J. Sibly, B. Tenhumberg, P. Thorbek and M. Wang III. 2015. Assessing pesticide risks to threatened and endangered species using population models: Findings and recommendations from the CropLife America Science Forum. Integrated Environmental Assessment and Management 11(3):348-354.

Brain, R.A., R.S. Teed, J. Bang, P. Thorbek, J. Perine, N. Peranginangin, M. Kim, T. Valenti, W. Chen, R.L. Breton, S.I. Rodney and **D.R.J. Moore**. 2015. Risk assessment considerations with regard to the potential impacts of pesticides on endangered species. Integrated Environmental Assessment and Management 11(1):102-117.

Moore, D.R.J., R.S. Teed, C.D. Greer, K.R. Solomon and J.P. Giesy. 2014. Refined avian risk assessment for chlorpyrifos. Reviews of Environmental Contamination and Toxicology 231:163-217.

Giesy, J.P., K.R. Solomon, D. Mackay, J.M. Giddings, M. Williams, **D.R.J. Moore,** J. Purdy and C. Cutler. 2014. Ecological risk assessment for chlorpyrifos in terrestrial and aquatic systems in the United States – overview and conclusions. Reviews of Environmental Contamination and Toxicology 231:1-12

Rodney, S.I., R.S. Teed and **D.R.J. Moore**. 2013. Estimating the toxicity of pesticide mixtures to aquatic organisms: A review. Human and Ecological Risk Assessment 19(6):1557-1575.

Moore, D.R.J. and R.S. Teed. 2013. Risks of carbamate and organophosphate pesticide mixtures to salmon in the Pacific Northwest. Integrated Environmental Assessment and Management 9(1):70-78.

MacDonald, D.D., **D.R.J. Moore,** C.G. Ingersoll, D.E. Smorong, R.S. Carr, R. Gouguet, D. Charters, D. Wilson, T. Harris, J. Rauscher, S. Roddy and J. Meyer. 2011. Baseline ecological risk assessment of the Calcasieu Estuary, Louisiana: 1. Overview and problem formulation. Archives of Environmental Contamination and Toxicology 61:1-13.

Moore, D.R.J., R.S. Teed, S.I. Rodney, R.P. Thompson and D.L. Fischer. 2010. Refined avian risk assessment for aldicarb in the United States. Integrated Environmental Assessment and Management 6(1):83-101.

Moore, D.R.J., R.P. Thompson, S.I. Rodney, D.L. Fischer, T. Ramanaryanan and T. Hall. 2010. Refined aquatic risk assessment for aldicarb in the United States. Integrated Environmental Assessment and Management 6(1):102-118.

Moore, D.R.J., D.L. Fischer, R.S. Teed and S.I. Rodney. 2010. A probabilistic risk assessment model for birds exposed to granular pesticides. Integrated Environmental Assessment and Management 6(2):260-272.

von Stackelberg, K., D. Vorhees, **D.R.J. Moore,** J. Cura and T. Bridges. 2008. Evaluation of sources of uncertainty in risk assessments conducted for the US Army using a case study approach. Integrated Environmental Assessment and Management 4(1):41-60.

Bursian, S.J., C. Sharma, R.J. Aulerich, B. Yamini, R.R. Mitchell, C.C. Orazio, **D.R.J. Moore,** S. Svirsky and D.E. Tillitt. 2006. Dietary exposure of mink (*Mustela vison*) to fish from the Housatonic River, Berkshire County, Massachusetts, USA: Effects on reproduction, kit growth and survival. Environmental Toxicology and Chemistry 25(6):1533-1540.

Bursian, S.J., C. Sharma, R.J. Aulerich, B. Yamini, R.R. Mitchell, K.J. Beckett, C.C. Orazio, **D.R.J. Moore,** S. Svirsky and D.E. Tillitt. 2006. Dietary exposure of mink (*Mustela vison*) to fish from the Housatonic River, Berkshire County, MA, USA: Effects on organ weights and histology and hepatic concentrations of polychlorinated biphenyls and 2,3,7,8-tetrachlorodibenzo-p-dioxin toxic equivalents. Environmental Toxicology and Chemistry 25(6):1541-1550.

Shore, R.F., D.R. Crocker, H.R. Akcakaya, R.S. Bennett, P.F. Chapman, M. Clook, M. Crane, I.C. Dewhurst, P.J. Edwards, A. Fairbrother, S. Ferson, D. Fischer, A.D.M. Hart, M. Holmes, M.J. Hooper, M. Lavine, A. Leopold, R. Luttik, P. Mineau, **D.R.J. Moore,** S.R. Mortenson, D.G. Noble, R.J. O'Connor, W. Roelofs, R.M. Sibley, G.C. Smith, M. Spendiff, T.A. Springer, H.M. Thompson and C. Topping. 2005. Case study part 1: How to calculate appropriate deterministic long-term toxicity to exposure ratios (TERs) for birds and mammals. Ecotoxicology 14:877-893.

Roelofs, W., D.R. Crocker, R.F. Shore, **D.R.J. Moore,** G.C. Smith, H.R. Akcakaya, R.S. Bennett, P.F. Chapman M. Clook, M. Crane, I.C. Dewhurst, P.J. Edwards, A. Fairbrother, S. Ferson, D. Fischer, A.D.M. Hart, M. Holmes, M.J. Hooper, M. Lavine, A. Leopold, R. Luttik, P. Mineau, S.R. Mortenson, D.G. Noble, R.J. O'Connor, R.M. Sibley, M. Spendiff, T.A. Springer, H.M. Thompson and C Topping. 2005. Case study part 2: Probabilistic modelling of long-term effects of pesticides on individual breeding success in birds and mammals. Ecotoxicology 14:895-923.

Moore, D.R.J., R.S. Teed and G.M. Richardson. 2003. Derivation of an ambient water quality criterion for mercury: Taking account of site-specific conditions. Environmental Toxicology and Chemistry 22(12):3069-3080.

Crane, M., P. Whitehouse, S. Comber, C. Watts, J. Giddings, **D.R.J. Moore** and E. Grist. 2003. Evaluation of probabilistic risk assessment of pesticides in the UK: Chlorpyrifos use on top fruit. Pest Management Science 59(5):512-526.

Moore, D.R.J., R.L. Breton and D.B. MacDonald. 2003. A comparison of model performance for six QSAR packages that predict acute toxicity to fish. Environmental Toxicology and Chemistry 22(8):1799-1809.

Pasternak, J.P., **D.R.J. Moore** and R.S. Teed. 2003. An ecological risk assessment of inorganic chloramines in surface water. Human and Ecological Risk Assessment 9(2):453-482.

Taylor, K.W., Caux, P.Y. and **D.R.J. Moore**. 2003. An ecological risk assessment of hexachlorobutadiene. Human and Ecological Risk Assessment 9(2):511-525.

Breton, R.L., R.S. Teed and **D.R.J. Moore**. An ecological risk assessment of phenol in the aquatic environment. Human and Ecological Risk Assessment 9(2):549-568.

Smith, G.C., A.D.M. Hart, M.D. Rose, R. MacArthur, A.S. Fernandes and **D.R.J. Moore**. 2002. Intake estimation of polychlorinated dibenzo-p-dioxins, dibenzofurans (PCDD/Fs) and polychlorinated biphenyls (PCBs) in salmon: The inclusion of uncertainty. Food Additives and Contaminants 19(8):70-778.

Moore, D.R.J. 2001. The Anna Karenina principle applied to ecological risk assessments of multiple stressors. Human and Ecological Risk Assessment 7(2):231-237.

Qian, S.S., W. Warren-Hicks, J. Keating, **D.R.J. Moore** and R.S. Teed. 2001. A predictive model of mercury fish tissue concentrations for the Southeastern United States. Environmental Science and Technology 35(5):941-947.

Moore, D.R.J., W.J. Warren-Hicks, B.R. Parkhurst, R.S. Teed, R.B. Baird, R. Berger, D.L. Denton and J.J. Pletl. 2000. Intra- and inter-treatment variance in reference toxicant tests. Environmental Toxicology and Chemistry 19(1):105-112.

Warren-Hicks, W.J., Parkhurst, B.R., **D.R.J. Moore,** R.S. Teed, R.B. Baird, R. Berger, D.L. Denton and J.J. Pletl,. 2000. Assessment of whole effluent toxicity test variability: Partitioning sources of variability. Environmental Toxicology and Chemistry 19(1):94-104.

Moore, D.R.J., B.E. Sample, G.W. Suter, B.R. Parkhurst and R.S. Teed. 1999. A probabilistic risk assessment of the effects of methyl mercury and PCBs on mink and kingfishers and East Fork Poplar Creek, Oak Ridge, Tennessee. Environmental Toxicology and Chemistry 18(12):2941-2953.

Moore, D.R.J., B.E. Sample, G.W. Suter, B.R. Parkhurst and R.S. Teed. 1999. Risk-based decision making: The East Fork Poplar Creek case study. Environmental Toxicology and Chemistry 18(12):2954-2958.

Moore, D.R.J. 1998. The ecological component of ecological risk assessment: Lessons from a field experiment. Human and Ecological Risk Assessment 3(5):1-21.

Moore, D.R.J. and P.Y. Caux. 1997. Estimating low toxic effects. Environmental Toxicology and Chemistry 16(4):794-801.

Caux, P.Y. and **D.R.J. Moore**. 1997. A spreadsheet program for estimating low toxic effects. Environmental Toxicology and Chemistry 16(4):802-806.

Moore, D.R.J., R.L. Breton and K.M. Lloyd. 1997. The effects of hexachlorobenzene on mink in the Great Lakes area: An ecological risk assessment. Environmental Toxicology and Chemistry 16(5):1042-1050.

Moore, D.R.J. 1996. Using Monte Carlo analysis to quantify uncertainty in ecological risk assessment: Are we gilding the lily or bronzing the dandelion? Human and Ecological Risk Assessment 2(4):628-633.

Weiher, E., I.C. Wisheu, P.A. Keddy and **D.R.J. Moore**. 1996. Establishment, persistence, and management implications of experimental wetland plant communities. Wetlands 16(2):208-218.

Moore, D.R.J. and B.J. Elliott. 1996. Should uncertainty be quantified in regulatory programs that use human and ecological risk assessment as tools for decision-making? Human and Ecological Risk Assessment 2(1):3-14.

Moore, D.R.J. and Biddinger, G.R. 1995. The interaction between risk assessors and risk managers during the problem formulation phase. Environmental Toxicology and Chemistry 14(12):2013-2014.

Wilson, S.D., **D.R.J. Moore** and P.A. Keddy. 1993. Relationships of marsh seed banks to vegetation patterns along environmental gradients. Freshwater Biology 29:361-370.

Moore, D.R.J., R.A. Kent, M.P. Wong and A.R. Davis, 1992. Criteria or guidelines? Environmental Science and Technology 26:7-8.

Shipley, B., P.A. Keddy, C.L. Gaudet and **D.R.J. Moore**. 1991. A model of species density in shoreline vegetation. Ecology 72:1658-1667.

Kent, R.A., **D.R.J. Moore** and S.L. Walker. 1991. Data gaps in the aquatic toxicology of priority pesticides and industrial toxic substances in Canada. Canadian Technical Report of Fisheries and Aquatic Sciences 1774:1111-1124.

McCanny, S.J., P.A. Keddy, T.J. Arnason, C.L. Gaudet, **D.R.J. Moore** and B. Shipley. 1990. Fertility and the food quality of wetland plants: A test of the resource availability hypothesis. OIKOS 59:373-381.

Wisheu, I.C., P.A. Keddy, **D.R.J. Moore,** S.J. McCanny and C.L. Gaudet. 1990. Effects of eutrophication on wetland vegetation. In Proceedings of the Wetlands of the Great Lakes Symposium, Niagara, New York, May 16-18, 1990.

Moore, D.R.J. 1990. Should TCE have been banned? Environmental Science and Technology 24:764.

Moore, D.R.J. and P.A. Keddy. 1989. The relationship between species richness and standing crop: The importance of scale. Vegetatio 79:99-106.

Moore, D.R.J., P.A. Keddy, C.L. Gaudet, and I.C. Wisheu. 1989. Conservation of wetlands: Do infertile wetlands deserve a higher priority? Biological Conservation 47:203-217.

Shipley, B., P.A. Keddy, **D.R.J. Moore** and K. Lemky. 1989. Regeneration and establishment strategies of emergent macrophytes. Journal of Ecology 77:1093-1110.

Moore, D.R.J. and P.A. Keddy. 1988. Regeneration in plant communities on environmental gradients: Effects of a water-depth gradient on the germination of lakeshore plants. Canadian Journal of Botany 66:548-552.

Moore, D.R.J. and P.B. Cavers. 1985. A comparison of seedling vigour in crop and weed biotypes of proso millet (*Panicum miliaceum* L.). Canadian Journal of Botany 63:1659-1663.

PRESENTATIONS

Moore, D.R.J., R.S. Teed, C.D. Greer and N.N. Poletika. 2015. A refined risk assessment for Kirtland's warbler potentially exposed to flowable chlorpyrifos in the United States. 36th Annual Society of Environmental Toxicology and Chemistry Conference, Salt Lake City, UT.

Moore, D.R.J. 2015. The tripartite experience in regulatory risk assessment: Reflections from over 20 years as a consultant. 36th Annual Society of Environmental Toxicology and Chemistry Conference, Salt Lake City, UT.

Teed, R.S., C. Greer and **D.R.J. Moore**. 2015. National endangered species assessment for chlorpyrifos: Refined terrestrial ecological risk assessment. 36th Annual Society of Environmental Toxicology and Chemistry Conference, Salt Lake City, UT.

Breton, R.L., M. Winchell, R.S. Teed, L. Padilla, G. Manning, S. Rodney, Y. Clemow, **D.R.J. Moore** and P. Whatling. 2015. A refined ecological risk assessment for the delta smelt potentially exposed to malathion in California. 36th Annual Society of Environmental Toxicology and Chemistry Conference, Salt Lake City, UT.

Teed, R.S., R.L. Breton, **D.R.J. Moore** and P. Whatling. 2015. National endangered species assessment for malathion: Refined aquatic and terrestrial ecological risk assessment. 36th Annual Society of Environmental Toxicology and Chemistry Conference, Salt Lake City, UT.

Breton, R.L., R.S. Teed, **D.R.J. Moore**, M. Winchell and L. Phelps. 2015. National endangered species assessment for diazinon: Screening-level ecological risk assessment. 36th Annual Society of Environmental Toxicology and Chemistry Conference, Salt Lake City, UT.

Moore, D.R.J., R.S. Teed, C.D. Greer, T.B. Fredricks and L.J. Schuler. 2015. A probabilistic risk assessment model for bird species foraging in corn and soybean fields with different tillage practices. 36th Annual Society of Environmental Toxicology and Chemistry Conference, Salt Lake City, UT.

Whitfield-Aslund, M., **D.R.J. Moore**, L. Ortego and S. McGee. 2015. Ecological risk assessment for aquatic invertebrates exposed to imidacloprid Part B: Effects metrics and risk characterization. 36th Annual Society of Environmental Toxicology and Chemistry Conference, Salt Lake City, UT.

Feken, M., T.M. Blickley, T. Carro, M. Christ, P. Edwards, T.B. Fredricks, K. Henry, M. Kern, S. McGee, **D.R.J. Moore**, S. Mortensen, S. Plautz, J. Staveley and F. Womack. 2015. Passerine dietary (LC50) test: Challenges and utility in deriving an acute endpoint for pesticide registration in the U.S. 36th Annual Society of Environmental Toxicology and Chemistry Conference, Salt Lake City, UT.

Moore, D.R.J., R.S. Teed and N. Poletika. 2015. Terrestrial endangered species assessment for chlorpyrifos: Initial analyses and results. 250th American Chemical Society National Meeting, Boston, MA.

Moore, D.R.J., R.S. Teed and N. Poletika. 2015. Endangered species assessment for chlorpyrifos co-occurrence and proximity analyses: Initial results. 250th American Chemical Society National Meeting, Boston, MA.

Teed, R.S., **D.R.J. Moore** and M. Winchell. 2015. Ecological risk assessment framework for endangered species assessments. 250th American Chemical Society National Meeting, Boston, MA.

Whitfield-Aslund, M., R.L. Breton, L. Padilla, R. Reiss, P. Whatling, M. Winchell, K. Wooding and **D.R.J. Moore**. 2015. Ecological risk assessment for Pacific salmon exposed to dimethoate in California. 250th American Chemical Society National Meeting, Boston, MA.

Knopper, L.D., R.L. Breton, **D.R.J. Moore**, A.T. Hall and L.M. Bowers. 2015. Effects characterization for aquatic invertebrates exposed to imidacloprid-Part A: A novel evaluation rubric to assess aquatic toxicity studies. SETAC Europe 25th Annual Meeting, Barcelona, Spain.

Moore, D.R.J., L.D. Knopper, R.L. Breton, C.D. Greer, M. Whitfield-Aslund, A.T. Hall and L.M. Bowers. 2015. Effects characterization for aquatic invertebrates exposed to imidacloprid-Part B: Higher tier approaches. SETAC Europe 25th Annual Meeting, Barcelona, Spain.

Moore, D.R.J. 2015. A framework for endangered species assessments: Recommendations from a CropLife America workshop. Crop Life/Informa Workshop held April 23-24. Washington, D.C.

Moore, D.R.J. 2014. Uncertainty analysis methods for assessing risks of pesticides to endangered species. 35th Annual Society of Environmental Toxicology and Chemistry Conference, Vancouver, BC.

Pastorok, R.A., **D.R.J. Moore**, A.B. Parks, D.V. Preziosi and R.S. Teed. 2014. Using probabilistic population modeling to inform pesticide risk assessments and jeopardy determinations for endangered species. 35th Annual Society of Environmental Toxicology and Chemistry Conference, Vancouver, BC.

Knopper, L.D., R.L. Breton, **D.R.J. Moore**, A.T. Hall and L.M. Bowers. 2014. Use of a novel evaluation rubric to assess micro- and mesocosm ("cosm") studies for ecological risk assessments. 35th Annual Society of Environmental Toxicology and Chemistry Conference, Vancouver, BC.

Fredricks, T.B., T.M. Blickley, K. Brugger, T. Carro, M. Christ, P.J. Edwards, K.S. Henry, W.E. Hillwalker, S. McGee, M.E. Kern, **D.R.J. Moore**, S.R. Mortensen and J.P. Staveley. 2014. Passerine acute oral dose study update. 35th Annual Society of Environmental Toxicology and Chemistry Conference, Vancouver, BC.

Breton, R.L., **D.R.J. Moore**, Y. Clemow, G. Manning, P. Whatling and M. Winchell. 2014. A refined effects determination for Delta smelt potentially exposed to malathion. 35th Annual Society of Environmental Toxicology and Chemistry Conference, Vancouver, BC.

Moore, D.R.J. 2014. Are mixtures of pesticides in the aquatic environment as serious an issue as implied by monitoring studies? 245th American Chemical Society National Meeting, San Francisco, CA.

Breton, R.L., Y. Kara, S. Rodney, M. Winchell, T.L. Estes, J. Hanzas, R.S. Teed, **D.R.J. Moore** and P. Whatling. 2014. A refined effects determination for the California red-legged frog potentially exposed to malathion. 245th American Chemical Society National Meeting, San Francisco, CA.

Breton, R.L., Y. Kara, S. Rodney, T.L. Estes, J. Hanzas, R.S. Teed, **D.R.J. Moore** and P. Whatling. 2014. A refined effects determination for the California red-legged frog potentially exposed to dimethoate. 245th American Chemical Society National Meeting, San Francisco, CA.

Moore, D.R.J. 2014. Population modeling in ecological risk assessments of pesticides. CropLife America Science Forum: Population Modeling of Endangered Species, Washington, DC.

Moore, D.R.J. and M.F. Leggett. 2013. No more excuses: It is time to incorporate uncertainty analyses in pesticide risk assessments. 34th Annual Society of Environmental Toxicology and Chemistry Conference, Nashville, TN.

Giesy, J.P., C. Cutler, J.M. Giddings, D. Mackay, **D.R.J. Moore,** W. Williams, J. Purdy and K.R. Soloman. Ecological risk assessment for chlorpyrifos in terrestrial and aquatic systems in North America: Overview and conclusions. 244th American Chemical Society National Meeting, Indianapolis, IN.

Moore, D.R.J., R.S. Teed, C.D. Greer, K.R. Solomon and J.P. Giesy. 2013. A refined avian risk assessment for agricultural uses of flowable chlorpyrifos in the United States. 244th American Chemical Society National Meeting, Indianapolis, IN.

Moore, D.R.J., R.S. Teed, C.D. Greer, K.R. Solomon and J.P. Giesy. 2013. A refined avian risk assessment for agricultural uses of granular chlorpyrifos in the United States. 244th American Chemical Society National Meeting, Indianapolis, IN.

Poletika, N.N., **D.R.J. Moore** and J.M. Giddings. 2013. Chlorpyrifos agricultural use and the Endangered Species Act: Do refinements in ecological risk assessment address uncertainty? 244th American Chemical Society National Meeting, Indianapolis, IN.

Moore, D.R.J. and W.G. Landis. 2012. Just say no to NOELs. 33rd Annual Society of Environmental Toxicology and Chemistry Conference, Long Beach, CA.

Landis, W.G. and **D.R.J. Moore**. 2012. The curve is the measure of toxicity. 33rd Annual Society of Environmental Toxicology and Chemistry Conference, Long Beach, CA.

Moore, D.R.J. 2012. Uncertainty analysis in ecological risk assessments of pesticides. CropLife America Science Forum: The Uncertainty of Capturing Uncertainty, Washington, DC.

Moore, D.R.J., K.J. Beckett and R.S. Teed. Risks of granular and flowable carbofuran to birds in Colombia. 2011. 32nd Annual Society of Environmental Toxicology and Chemistry Conference, Boston, MA.

Rodney, S., R.L. Breton, T.M. Wolf, P. Whatling, **D.R.J. Moore,** T.L. Estes and J. Hanzas. 2011. Development of models to predict pesticide spray drift deposition from aerial, airblast and groundspray applications. 32nd Annual Society of Environmental Toxicology and Chemistry Conference, Boston, MA.

Moore, D.R.J. and R.S. Teed. 2011. Risks of pesticide mixtures to salmon in the Pacific Northwest. 242nd American Chemical Society National Meeting, Denver, CO.

Teed, R.S., **D.R.J. Moore,** T. Hall, G. Sabbagh and R.L. Breton. 2011. An approach for the assessment of indirect effects to threatened and endangered terrestrial species exposed to herbicides: Glufosinate case study. 242nd American Chemical Society National Meeting, Denver, CO.

Moore, D.R.J. 2011. Do mixtures of pesticides pose a risk to salmonids in the Pacific Northwest? Crop Life/Informa Workshop held April 7-8. Washington, D.C.

Moore, D.R.J. 2010. Risks of pesticide mixtures to salmon in the Pacific Northwest. 31st Annual Society of Environmental Toxicology and Chemistry Conference, Portland, OR.

Teed, R.S., **D.R.J. Moore,** T. Hall and R.L. Breton. 2010. An approach for assessment of indirect effects to threatened and endangered aquatic and terrestrial species exposed to herbicides: Glufosinate case study. 31st Annual Society of Environmental Toxicology and Chemistry Conference, Portland, OR.

Estes, T.L., R.L. Breton, T.M. Wolf, P. Whatling, J. Schupner, J. Hanzas and **D.R.J. Moore**. 2010. Development of empirically-derived drift distributions to predict deposition of pesticides from ground spray applications. 31st Annual Society of Environmental Toxicology and Chemistry Conference, Portland, OR.

Estes, T.L., R.L. Breton, T.M. Wolf, P. Whatling, J. Schupner, J. Hanzas and **D.R.J. Moore**. 2010. Development of empirically-derived drift distributions to predict deposition of pesticides from orchard airblast applications. 31st Annual Society of Environmental Toxicology and Chemistry Conference, Portland, OR.

Estes, T.L., R.L. Breton, T.M. Wolf, P. Whatling, J. Schupner, J. Hanzas and **D.R.J. Moore**. 2010. Development of empirically-derived drift distributions to predict deposition of pesticides from aerial applications. 31st Annual Society of Environmental Toxicology and Chemistry Conference, Portland, OR.

Teed, R.S. and **D.R.J. Moore**. 2010. Occurrence and toxicity of pesticide mixtures in California's Central Valley. 31st Annual Society of Environmental Toxicology and Chemistry Conference, Portland, OR.

Breton, R.L., **D.R.J. Moore**, R.S. Teed, P. Whatling and J. Schupner. 2010. A refined effects determination for the California red-legged frog potentially exposed to dimethoate. 31st Annual Society of Environmental Toxicology and Chemistry Conference, Portland, OR.

Schuler, L.J., J.P. Wright, J.L. Honegger, J. Hanzas and **D.R.J. Moore**. 2010. Le Sueur River watershed aquatic plant assessment. 31st Annual Society of Environmental Toxicology and Chemistry Conference, Portland, OR.

Moore, D.R.J. 2010. Assessing risks from pesticide mixtures in surface waters. Crop Life/Informa Workshop held April 15-16. Washington, D.C.

Moore, D.R.J., N.N. Poletika and R.L. Breton. 2009. Policy, process and technical issues facing the development of benchmarks in Canada and the United States. 30th Annual Society of Environmental Toxicology and Chemistry Conference, New Orleans, LA.

Moore, D.R.J. 2009. Use of advanced tools in assessment of risk. Crop Life/Informa Workshop held April 28-29. Washington, D.C.

Moore, D.R.J., R.S. Teed and T.M. Delongchamp. 2008. A probabilistic exposure model for birds exposed to flowable pesticides. 29th Annual Society of Environmental Toxicology and Chemistry Conference, Tampa, FL.

Moore, D.R.J., R.S. Teed, T.M. Delongchamp, R.L. Breton, L.B. Best, L.W. Brewer, K.R. Solomon, D. Carlson, M. Maynard, M. Morelli and S. Nissen-Meyer. 2008. Estimating risk for birds exposed to flowable carbofuran in the United States. 29th Annual Society of Environmental Toxicology and Chemistry Conference, Tampa, FL.

Brewer, L.W., J.M. Stafford, C.A. Redmond, L.B. Best, **D.R.J. Moore,** K.R. Soloman, D. Carlson, M. Maynard, M. Morelli and S. Nissen-Meyer. 2008. Mallard (*Anas platyrhynchos*) avoidance of flowable carbofuran relative to risk projections in avian pesticide risk assessment. 29th Annual Society of Environmental Toxicology and Chemistry Conference, Tampa, FL.

Solomon, K.R., L.W. Brewer, J.M. Stafford, C.A. Redmond, L.B. Best, **D.R.J. Moore,** D. Carlson, M. Maynard, M. Morelli and S. Nissen-Meyer. 2008. Recovery rate of carbofuran-inhibited brain acetylcholinesterase in birds: A risk assessment issue. 29th Annual Society of Environmental Toxicology and Chemistry Conference, Tampa, FL.

Stafford, J.M., L.W. Brewer, C.A. Redmond, L.B. Best, **D.R.J. Moore,** K.R. Soloman, D. Carlson, M. Maynard, M. Morelli and S. Nissen-Meyer. 2008. Further evaluation of the use of the median lethal dose (LD50) as the lethality threshold in avian pesticide risk assessment. 29th Annual Society of Environmental Toxicology and Chemistry Conference, Tampa, FL.

Rodney, S.I., **D.R.J. Moore,** R.S. Teed, and M.J. Demers. 2008. An Excel-based tool for fitting and evaluating species sensitivity distributions. 29th Annual Society of Environmental Toxicology and Chemistry Conference, Tampa, FL.

Hall, T., C. Thomas, J. Honegger, J. Giddings and **D.R.J. Moore**. 2008. Endangered species indirect effects: Screening level assessments and refined ecological assessments. 29th Annual Society of Environmental Toxicology and Chemistry Conference, Tampa, FL.

Moore, D.R.J. 2008. Ecological risk assessment: Protection goals. Crop Life/Informa Workshop held April 8-9. Washington, D.C.

Moore, D.R.J. 2008. LiquidPARAM: A refined probabilistic model for estimating risk to birds exposed to flowable pesticides. Invited speaker to March 19 SETAC Laurentian Meeting, Ottawa, ON.

Moore, D.R.J. 2008. LiquidPARAM: A model developed in support of the avian risk assessment for liquid carbofuran. Presented at the U.S. EPA Scientific Advisory Panel Meeting to Consider the Scientific Issues Associated With EPA's Notice of Intent to Cancel Carbofuran, February 5-8, 2008. Washington, D.C.

Moore, D.R.J., D.L. Fischer, T.S. Ramanarayanan, R.P. Thompson and S.I. Rodney. 2006. Estimating risk for aquatic life exposed to aldicarb in the United States. 27th Annual Society of Environmental Toxicology and Chemistry Conference, Montreal, QC.

Moore, D.R.J., D.L. Fischer, R.S. Teed, R.P. Thompson and S.I. Rodney. 2006. Estimating risk for birds exposed to aldicarb in the United States. 27th Annual Society of Environmental Toxicology and Chemistry Conference, Montreal, QC.

Moore, D.R.J., D.L. Fischer, R.S. Teed and S.I. Rodney. 2006. Estimating risk for birds exposed to granular pesticides: A probabilistic exposure model. 27th Annual Society of Environmental Toxicology and Chemistry Conference, Montreal, QC.

Moore, D.R.J., D.L. Fischer, R.S. Teed and S.I. Rodney. 2006. A probabilistic exposure model for estimating risk of birds exposed to granular pesticides: Sensitivity analysis and model performance. 27th Annual Society of Environmental Toxicology and Chemistry Conference, Montreal, QC.

Moore, D.R.J., D.L. Fischer, R.S. Teed and S.I. Rodney. 2006. A probabilistic exposure model for birds exposed to granular pesticides. 27th Annual Society of Environmental Toxicology and Chemistry Conference, Montreal, QC.

Moore, D.R.J., L.B. Best, L.W. Brewer, D.L. Fischer, A.T. Hall, I.D. Kelly, S.J. Klaine, T.S. Ramanarayanan and K.R. Solomon,. 2006. Establishing "Bright Lines" in probabilistic risk assessments of pesticides and contaminated sites. 27th Annual Society of Environmental Toxicology and Chemistry Conference, Montreal, QC.

Breton, R.L., R.P. Thompson, **D.R.J. Moore**, R.S. Teed, S. Mortensen and S.B. Wall. 2006. An endangered species assessment for wildlife potentially exposed to brodifacoum. 27th Annual Society of Environmental Toxicology and Chemistry Conference, Montreal, QC.

Jiapizian, P., P.-Y. Caux, E. Sabo, M. Demers, **D.R.J. Moore,** R.S. Teed, R.L. Breton, R. Roshon and G. Stephenson. 2006. Derivation of Ideal Performance Standards for 10 pesticides in Canadian surface waters. 27th Annual Society of Environmental Toxicology and Chemistry Conference, Montreal, QC.

Moore, D.R.J. 2006. A probabilistic model for estimating exposure of birds to granular pesticides. Invited speaker to April 26 SETAC Laurentian Meeting, Ottawa, ON.

Moore, D.R.J., R.S. Teed, R.L. Breton, R.P. Thompson, R. Willis, P.B. Jiapizian, P.-Y. Caux, M. Bauder and P. Bacchus, 2005. A methodology for derivation of Ideal Performance Standards for pesticides in Canada. 26th Annual Society of Environmental Toxicology and Chemistry Conference, Baltimore, MD.

Goldacker, S., J. Archbold, J. Shapiro, P.B. Jiapizian, P.-Y. Caux R.S. Teed and **D.R.J. Moore**. 2005. Introducing a method to derive Achievable Performance Standards at the sub-watershed level for pesticides. 26th Annual Society of Environmental Toxicology and Chemistry Conference, Baltimore, MD.

Moore, D.R.J., R.L. Breton, R.P. Thompson, R.S. Teed and S.C Svirsky. 2005. Risk to birds and mammals in the PCB-contaminated watershed of the Housatonic River, Massachusetts. Third International Conference on Remediation of Contaminated Sediments, New Orleans, LA.

Moore, D.R.J. 2004. A probabilistic site-specific approach for developing Ambient Water Quality Criteria for mercury. WEFTEC Workshop: Looking to the Future by Reevaluating Water Quality Criteria Now, New Orleans, LA.

Moore, D.R.J. 2004. Estimating and presenting uncertainties in empirical data and modeling results. Addressing and Managing Uncertainty at Contaminated Sites – USACE/USEPA/SMWG Joint Sediment Conference, St. Louis, MO.

Lortie, J.P., **Moore, D.R.J.** and Svirsky, S.C. 2003. Ecological risk assessment overview: PCB contamination in the Housatonic River, Pittsfield, Lenox, and Lee, MA. 10th Annual Conference of the Wildlife Society, Burlington, VT.

Pawlisz, A.V., **D.R.J. Moore,** R.P. Thompson, R.L. Breton, R.S. Teed and D.B. MacDonald. 2003. A probabilistic risk assessment for sediment-probing, carnivorous-wading, and piscivorous birds exposed to tPCBs, mercury, TEQ, lead and selenium in the Calcasieu Estuary, LA. 24th Annual Society of Environmental Toxicology and Chemistry Conference, Austin, TX.

Teed, R.S., **D.R.J. Moore,** D.L. MacDonald, D.B. MacDonald, R.L. Breton, A.V. Pawlisz and R.P. Thompson. 2003. Assessing the risks to carnivorous fish in the Calcasieu Estuary, Louisiana: A probabilistic risk assessment. 24th Annual Society of Environmental Toxicology and Chemistry Conference, Austin, TX.

Moore, D.R.J., R.L. Breton, D.B. MacDonald, A.V. Pawlisz, R.S. Teed and R.P. Thompson. 2003. Assessing risks to wildlife in the Calcasieu Estuary, Louisiana: An overview of the probabilistic approach used. 24th Annual Society of Environmental Toxicology and Chemistry Conference, Austin, TX.

Breton, R.L., D.B. MacDonald, **D.R.J. Moore,** R.S. Teed, A.V. Pawlisz and R.P. Thompson. 2003. Assessing the risks to piscivorous and omnivorous mammals in the Calcasieu Estuary contaminated site, Louisiana: A probabilistic risk assessment. 24th Annual Society of Environmental Toxicology and Chemistry Conference, Austin, TX.

Moore, D.R.J., S. Ferson, J.P. Lortie and C. Werner. 2002. Probabilistic risk assessment approach for threatened and endangered species exposed to PCBs along the Housatonic River. 23rd Annual Society of Environmental Toxicology and Chemistry Conference, Salt Lake, UT.

Moore, D.R.J., R.S. Teed and M. Richardson. 2002. Derivation of an ambient water quality criterion for mercury: Taking account of site-specific conditions. 23rd Annual Society of Environmental Toxicology and Chemistry Conference, Salt Lake, UT.

Moore, D.R.J. 2002. SETAC Pellston workshop on uncertainty analysis: Wildlife exposure assessment case study. 23rd Annual Society of Environmental Toxicology and Chemistry Conference, Salt Lake, UT.

Pawlisz, A.V., J. Steevens, M. Reiss and **D.R.J. Moore**. 2002. Development of tissue residue benchmarks for estimating risk associated with contaminated sediments. 23rd Annual Society of Environmental Toxicology and Chemistry Conference, Salt Lake, UT.

Teed, R.S., Thompson, R.P., **Moore, D.R.J.** and Tillitt, D. 2002. Analytical co-elution and the development of toxic equivalency factors (TEF). 22rd Annual Society of Environmental Toxicology and Chemistry Conference, Salt Lake, UT.

Teed, R.S., **D.R.J. Moore**, G.M. Richardson, A.V. Pawlisz, H.E. Allen, S. Thakali, J. Little, G. Holdsworth and R.P. Thompson. 2002. Assessment of existing methods and data development for revising water quality criteria for protection of aquatic life and wildlife for mercury. WEFTEC 2002 Conference, Chicago, IL.

Moore, D.R.J., S. Svirsky, T. DeLong, R. Dexter, S. Ferson and J. Lortie. 2001. Ecological risk assessment approach for the Housatonic River. 22nd Annual Society of Environmental Toxicology and Chemistry Conference, Baltimore, MD.

Svirsky, S., R., Beach, J. Lortie, **D.R.J. Moore**, C. Wallen and J. Walsh. 2001. Assessing risk, fate, transport and bioaccumulation of PCBs in the Housatonic River. 22nd Annual Society of Environmental Toxicology and Chemistry Conference, Baltimore, MD.

Warren-Hicks, W.A., M. Santoro, D. Bacon, B.R. Parkhurst and **D.R.J. Moore**. 2001. Ecological risk assessment of PFOS. 22nd Annual Society of Environmental Toxicology and Chemistry Conference, Baltimore, MD.

Cureton, P.M., A. Atkinson, M. Bonnell, R.S. Teed and **D.R.J. Moore**. 2001. Proposed framework for screening level ecological risk assessments of substances in Canada. 22nd Annual Society of Environmental Toxicology and Chemistry Conference, Baltimore, MD.

Moore, D.R.J. 2001. Introduction to probabilistic methods. EUPRA European Workshop on Probabilistic Risk Assessment for Environmental Impacts of Pesticides, Leeuwenhorst, The Netherlands.

Moore, D.R.J., A.V. Pawlisz, A.D.M. Hart and W.A. Warren-Hicks. 2001. Probabilistic techniques to determine risk to birds exposed to chlorpyrifos in apple orchards. EUPRA European Workshop on Probabilistic Risk Assessment for Environmental Impacts of Pesticides, Leeuwenhorst, The Netherlands.

Hart A., **D.R.J. Moore**, W.A. Warren-Hicks, A.V. Pawlisz, and R.S. Teed. 2001. Simple probabilistic techniques to determine risk to birds exposed to chlorpyrifos in apple orchards. 11th Annual Meeting of Society of Environmental Toxicology and Chemistry Europe Conference, Madrid, Spain.

Moore, D.R.J., A. Hart, W.A. Warren-Hicks, A.V. Pawlisz and R.S. Teed. 2001. Application of second order Monte Carlo analysis and probability bounds analysis to estimate risk to birds exposed to chlorpyrifos in apple orchards. 11th Annual Meeting of Society of Environmental Toxicology and Chemistry Europe Conference, Madrid, Spain.

Moore, D.R.J. 2001. New developments in quantifying uncertainty in ecological risk assessment. English Nature Workshop: Risk Assessment, Peterborough, UK.

Moore, D.R.J. 2000. Use of hierarchical Monte Carlo methods to propagate uncertainties in ecological risk assessments of pesticides. 21st Annual Society of Environmental Toxicology and Chemistry Conference, Nashville, TN.

Ferson, S. and **D.R.J. Moore**. 2000. Bounding uncertainty analyses: Marrying probability and worst case arguments in risk assessments. 21st Annual Society of Environmental Toxicology and Chemistry Conference, Nashville, TN.

Moore, D.R.J., A.V. Pawlisz and R.S. Teed. 2000. Utility of the spatially-explicit PATCH model for estimating risks of anthropogenic stressors to wildlife. 21st Annual Society of Environmental Toxicology and Chemistry Conference, Nashville, TN.

Pasternak, J.P., **D.R.J. Moore** and R.S. Teed. 2000. A probabilistic risk assessment for aquatic biota exposed to inorganic chloramines in Canada. 21st Annual Society of Environmental Toxicology and Chemistry Conference, Nashville, TN.

Karalis, E., D.J. Porter, M.A. Bonnell, **D.R.J. Moore,** A.J. Atkinson and R.S. Teed. 2000. A framework for the ecological risk assessment of new substances in Canada. 21st Annual Society of Environmental Toxicology and Chemistry Conference, Nashville, TN.

Karalis, E., D.J. Porter, M.A. Bonnell, **D.R.J. Moore** and A.J. Atkinson. 2000. A framework for the ecological risk assessment of new substances in Canada. 27th Annual Aquatic Toxicity Workshop, St. John's, NL.

Moore, D.R.J. and W.J Warren-Hicks. 2000. New and not so new statistical methods for use in ecological risk assessment. 10th Annual Meeting of Society of Environmental Toxicology and Chemistry Europe Conference, Brighton, U.K.

Sutcliffe, R., R.L. Breton, D. MacDonald, **D.R.J. Moore**, J.D. Walker, M. Bonnell, and R Purdy. 2000. Results of an international QSAR workshop on estimating persistence, bioaccumulation and ecotoxicity of substances. 10th Annual Meeting of Society of Environmental Toxicology and Chemistry Europe Conference, Brighton, U.K.

Moore, D.R.J., R.L. Breton, D. MacDonald, P. Harris, R. Chenier, R. Sutcliffe, J. Sanderson, S. Bradbury, C. Russom and P.C. Jurs. 1999. Ability of ECOSAR, TOPKAT, Neural Networks and ASTER to predict toxicity of chemicals to aquatic biota. 20th Annual Society of Environmental Toxicology and Chemistry Conference, Philadelphia, PA.

Warren-Hicks, W.J. and **D.R.J. Moore**. 1999. Beyond Monte Carlo. 20th Annual Society of Environmental Toxicology and Chemistry Conference, Philadelphia, PA.

Warren-Hicks, W.J. B.R. Parkhurst, **D.R.J. Moore**, R.B. Berger, J.J. Pletl, D.L. Denton and R.B. Baird. 1999. Whole effluent toxicity test variability: A variance components analysis. 20th Annual Society of Environmental Toxicology and Chemistry Conference, Philadelphia, PA.

Moore, D.R.J., R.S. Teed, W.J. Warren-Hicks, B.R. Parkhurst, R.B. Berger, J.J. Pletl, D.L. Denton and R.B. Baird. 1999. Intra- and Inter-treatment variance in reference toxicant tests. 20th Annual Society of Environmental Toxicology and Chemistry Conference, Philadelphia, PA.

Parkhurst, B.R., W.J. Warren-Hicks, **D.R.J. Moore**, R.B. Berger, J.J. Pletl, D.L. Denton, and R.B. Baird. 1999. WET test variability: Demonstration of effects on compliance with WET. 20th Annual Society of Environmental Toxicology and Chemistry Conference, Philadelphia, PA.

Teed, R.S., S.S. Qian, W.J. Warren-Hicks, **D.R.J. Moore**, F.J. Keating and L.S. Steeves. 1999. Examination of the spatial relationship and interaction of selected environmental parameters to mercury concentrations in fish tissue in the north-eastern United States. 20th Annual Society of Environmental Toxicology and Chemistry Conference, Philadelphia, PA.

Jensen, F.A., G.R. Craig, **D.R.J. Moore** and M.B. Constable. 1999. The risks of ammonia to aquatic biota in Canada: Results of a priority substances assessment. 20th Annual Society of Environmental Toxicology and Chemistry Conference, Philadelphia, PA.

Parkhurst, B.R., **D.R.J. Moore** and J. Kennedy. 1999. How well do EPA's water quality criteria for ammonia predict effects to aquatic communities? 20th Annual Society of Environmental Toxicology and Chemistry Conference, Philadelphia, PA.

Moore, D.R.J. 1998. Ecological risk assessment. 19th Annual Society of Environmental Toxicology and Chemistry Conference, Charlotte, NC.

Moore, D.R.J. and P.Y. Caux. 1998. Hockey stick and Generalized Linear Models (GLiMs): How useful are they for estimating thresholds? 19th Annual Society of Environmental Toxicology and Chemistry Conference, Charlotte, NC.

Moore, D.R.J. 1998. Ethics in ecological risk assessment. 19th Annual Society of Environmental Toxicology and Chemistry Conference, Charlotte, NC.

Moore, D.R.J., R.S. Teed, B.E. Sample, G.W. Suter and B.R. Parkhurst. 1998. A probabilistic risk assessment of the effects of methylmercury and PCBs on mink and kingfishers along East Fork Poplar Creek, Oak Ridge, Tennessee. 19th Annual Society of Environmental Toxicology and Chemistry Conference, Charlotte, NC.

Moore, D.R.J., R.S. Teed, B.E. Sample, G.W. Suter and B.R. Parkhurst. 1998. Risk-based decision making: The East Fork Poplar Creek case study. 19th Annual Society of Environmental Toxicology and Chemistry Conference, Charlotte, NC.

Keating, F.J., P.A. Cocca, R.S. Teed, L. Steeves and **D.R.J. Moore**. 1998. Comparison of air deposition of mercury with concentrations in fish. 19th Annual Society of Environmental Toxicology and Chemistry Conference, Charlotte, NC.

deFur, P., S. Ferenc, M. Dobbs, C. Grue, S. Marcy, **D.R.J. Moore**, R. Rolland and R. Wentsel. 1998. Risk characterization in ecological assessments for multiple stressors. 19th Annual Society of Environmental Toxicology and Chemistry Conference, Charlotte, NC.

Moore, D.R.J. 1998. Probabilistic ecological risk assessment. U.S. Army Corps of Engineers Workshop on Environmental Risk Assessment and Dredged Material Management: Issues and Applications, San Diego, CA.

Moore, D.R.J., R.S. Teed, A. Fairbrother, L.A. Kapustka and R.S. Bennett. 1997. A searchable database for population, community and ecosystem-level endpoints used in ecological risk assessment. 18th Annual Society of Environmental Toxicology and Chemistry Conference, San Francisco, CA.

Moore, D.R.J. and P.Y. Caux. 1997. Incorporating sediment bioavailability in a probabilistic risk assessment of CCA-treated bulkhead effects to marine biota. 18th Annual Society of Environmental Toxicology and Chemistry Conference, San Francisco, CA.

Moore, D.R.J. and P.Y. Caux. 1996. Quantifying uncertainty when characterizing effects. 17th Annual Society of Environmental Toxicology and Chemistry Conference, Washington, D.C.

Caux, P.Y. and **D.R.J. Moore.** 1996. Towards a quantitative ecological risk analysis of CCA treated wood to marine biota. 17th Annual Society of Environmental Toxicology and Chemistry Conference, Washington, D.C.

Moore, D.R.J. and S. Ferson. 1996. Probabilistic exposure analysis: Possible approaches when information is limited (as it always is). 6th Annual ASTM Symposium on Environmental Toxicology and Risk Assessment, Washington, D.C.

Moore, D.R.J. 1996. Ecological risk assessments of priority substances in Canada: Identification and resolution of difficult issues. 6th Annual ASTM Conference on Environmental Toxicology and Risk Assessment, Washington, D.C.

Moore, D.R.J. 1995. Perspective on U.S. EPA ecological risk assessment framework and guideline issues. U.S. EPA Public Colloquium on developing an EPA ecological risk assessment guideline. Alexandria, VA.

Moore, D.R.J. and B.J. Elliott. 1995. Should uncertainty be quantified in ecological risk assessments? A regulatory perspective. SETAC Foundation for Environmental Education, Pellston Workshop, Pellston, MI.

Moore, D.R.J. and P.Y. Caux. 1995. Replacing NOELs and LOELs with ECx point estimation as the preferred measure of toxic effect. 16th Annual Society of Environmental Toxicology and Chemistry Conference, Vancouver, BC.

Moore, D.R.J. and B.J. Elliott. 1995. Uncertainty analysis in ecological risk assessment: Application factors versus probabilistic methods in ecological risk assessments of chemicals. 16th Annual Society of Environmental Toxicology and Chemistry Conference, Vancouver, BC.

Moore, D.R.J., R.L. Breton and W. Windle. 1994. Beyond quotients: Costs and benefits of using quantitative risk assessment approaches in a regulatory program. 15th Annual Society of Environmental Toxicology and Chemistry Conference, Denver, CO.

Moore, D.R.J. 1994. Ecological assessments of priority substances under the Canadian Environmental Protection Act. SETAC Foundation for Environmental Education, Pellston Workshop, Pellston, MI.

Moore, D.R.J., R. Chénier and C. Fortin. 1993. Environmental effects of priority substances used in Canada: Ecological assessment framework, methods and difficult issues. 14th Annual Society of Environmental Toxicology and Chemistry Conference, Houston, TX.

Breton, R.L. and **D.R.J. Moore.** 1993. The effects of chlorinated wastewater effluents released to the Canadian environment. 14th Annual Society of Environmental Toxicology and Chemistry Conference, Houston, TX.

McBain, D.C., R. Chénier, C. Fortin and **D.R.J. Moore.** 1993. The CEPA priority substances assessment program. 20th Annual Aquatic Toxicity Workshop, Quebec, QC.

Moore, D.R.J., R. Chénier, C. Fortin and D.C. McBain. 1993. Current framework used to conduct ecological assessments of priority substances under CEPA. 20th Annual Aquatic Toxicity Workshop, Quebec, QC.

Moore, D.R.J. and B.J. Elliott. 1991. Risk assessment for priority substances in Canada. 12th Annual Society of Environmental Toxicology and Chemistry Conference, Seattle, WA.

Kent, R.A. and **D.R.J. Moore.** 1990. Data gaps in the aquatic toxicology of priority pesticides and industrial toxic substances in Canada. 17th Annual Aquatic Toxicity Workshop, Vancouver, BC.

Wisheu, I.C., **D.R.J. Moore**, C. Gaudet and P.A. Keddy. 1990. Predicting changes in the number and types of wetland species after eutrophication. Wetlands of the Great Lakes. Status of Science Base: Protection and Management Options and Needs, Niagara Falls, NY.

Moore, D.R.J., R.C. Pierce, M.P. Wong and D.M. Trotter. 1990. Developing Canadian water quality guidelines for tributyltin to protect freshwater and marine aquatic life. 11th Annual Society of Environmental Toxicology and Chemistry Conference, Arlington, VA.

Moore, D.R.J. and P.A. Keddy. 1988. Conservation of infertile wetlands: Planning and management priorities. Ontario Wetlands Conference, Toronto, ON.

Moore, D.R.J. and P.A. Keddy. 1988. Conservation of wetlands: Do infertile wetlands deserve a higher priority? Ontario Ecology and Ethology Conference, Kingston, ON.

Moore, D.R.J. and P.A. Keddy. 1987. Species richness models: A matter of scale. Ontario Ecology and Ethology Conference, Ottawa, ON.

Moore, D.R.J. S.D. Wilson and P.A. Keddy. 1986. Similarities between adult vegetation and seed banks: A field study. Ecological Society of America, Syracuse, NY.

Moore, D.R.J. and P.A. Keddy. 1985. Seedling recruitment along a water-level gradient: Shared or distinct preferences. Ontario Ecology and Ethology Conference.

Moore, D.R.J. and P.A. Keddy. 1985. Regeneration of lakeshore vegetation: An experimental study. Canadian Congress of Biology.

Moore, D.R.J. and P.B. Cavers. 1983. A comparison of seedling vigour in crop and weed forms of proso millet (*Panicum miliaceum* L.). Ontario Ecology and Ethology Conference.

EXHIBIT 44

UNITED STATES ENVIRONMENTAL PROTECTION AGENCY
WASHINGTON, D.C. 20460

OFFICE OF CHEMICAL SAFETY
AND POLLUTION PREVENTION

MEMORANDUM

SUBJECT: **Toxicity Testing and Ecological Risk Assessment Guidance for Benthic Invertebrates**

FROM: **Donald J. Brady, Ph.D., Director**
Environmental Fate and Effects Division (7507P)
Office of Pesticide Programs

TO: **Environmental Fate and Effects Division (7507P)**
Office of Pesticide Programs

Whole sediment toxicity testing is now being routinely required as part of pesticide registration actions (registration review, new pesticide registrations). To date, however, the Environmental Fate and Effects Division (EFED) has not established formal guidance on which specific sediment toxicity tests should be recommended and how results from these studies should be integrated into EFED ecological risk assessments.

Effective immediately, this memo provides guidance to EFED ecological risk assessors on **when to require whole sediment toxicity tests** and **how to integrate sediment toxicity tests results into EFED ecological risk assessments**. This guidance document was developed by the EFED sediment toxicity workgroup over the past several years and incorporates input from multiple EFED technical teams, senior scientists and management team briefings. Elements of this guidance have also been presented at international scientific meetings including the Society of Environmental Toxicology and Chemistry (SETAC) and the European Chemicals Agency (ECHA). Importantly, this guidance is intended to support interpretation of the sediment toxicity testing requirements set forth in 40 CFR Part 158 (Subpart G) and is not intended as a replacement or alteration of these regulations. A case study that implements elements of this guidance for assessing risk to benthic invertebrates is provided in **Attachment 1**.

This guidance memo provides further information and clarification on the following questions:

1. Why is sediment toxicity testing required?
2. When should sediment toxicity studies be requested?
3. Which benthic invertebrate species should be tested?
4. How should risks to benthic invertebrates be estimated?
5. Which levels of concern should be applied?
6. Which common assumptions and sources of uncertainties should be characterized in the risk assessment?

Guidance on addressing each of these questions is summarized in Sections 1 - 6 below.

1. Why Is Sediment Toxicity Testing Required?

As of October 26, 2007, sediment toxicity testing of benthic aquatic invertebrates has been conditionally required as part of the Office of Pesticide Program's (OPP) ecological effects data requirements contained in 40 CFR Part 158 Subpart G (USEPA 2007)[1]. Prior to this time, risk of benthic aquatic invertebrates was commonly evaluated in EFED using the Equilibrium Partitioning (EqP) approach in combination with water column toxicity data. The EqP approach involves comparing estimated environmental concentrations (EECs) of pesticides in sediment interstitial (pore) water to acute and chronic toxicity endpoints derived from water column-dwelling invertebrates toxicity tests (e.g., *Daphnia*, mysid shrimp).

While the EqP approach is still scientifically valid and broadly applicable for estimating risks to benthic invertebrates for non-ionic organic chemicals, sediment toxicity testing for pesticides offers several advantages over the EqP approach. First, sediment toxicity tests incorporate pesticide exposure from ingested food and sediment particles (in addition to respiration of pore water and overlying water through gills and integument), whereas the EqP approach generally excludes exposure via non-respiratory routes. Second, results from sediment toxicity tests can be used to directly interpret monitoring data of pesticides in benthic sediments. Third, sediment toxicity tests directly account for factors that affect chemical partitioning, bioavailability, and toxicity in the test system, such as the source and composition of sediment organic carbon. These and other sediment-specific factors are not readily addressed using current EqP methods. Furthermore, EqP is recognized as being limited to non-ionizable organic chemicals and is thus not readily applied to other types of chemicals such as metals, organometalics, and ionizable organic chemicals. Lastly, the current battery of sediment toxicity tests includes a benthic aquatic insect (midge) and two benthic crustacean amphipods which enable the effects of pesticides to be evaluated using species encompassing a broader taxonomic range compared to standard water column tests of aquatic invertebrates (*e.g., Daphnia*, mysid shrimp, oyster).

2. When Should Sediment Toxicity Testing Be Requested?

Whole sediment toxicity tests are conditionally required for a pesticide as specified in 40 CFR Part 158 Subpart G based on a series of toxicity testing 'triggers' that pertain to:

1. The likelihood of chemical exposure in aquatic ecosystems;
2. The extent the chemical partitions to sediment particles;
3. The persistence of the pesticide in the aquatic environment;
4. The toxicological relevance of predicted or monitored exposure concentrations; and
5. The likelihood of chemical exposure in estuarine/marine ecosystems.

[1] For Preamble language and Final Rulemaking, see: U.S. Environmental Protection Agency. 2007. Pesticides; Data Requirements for Conventional Chemicals, Technical Amendments, and Data Requirements for Biochemical and Microbial Pesticides; Final Rules *Federal Register* / Vol. 72, No. 207 / Friday, October 26, 2007.

A conceptual framework for evaluating the need for sediment toxicity testing is shown in **Figure 1.** Additional details on specific numeric triggers are provided **Sections 1.1 through 1.5.**

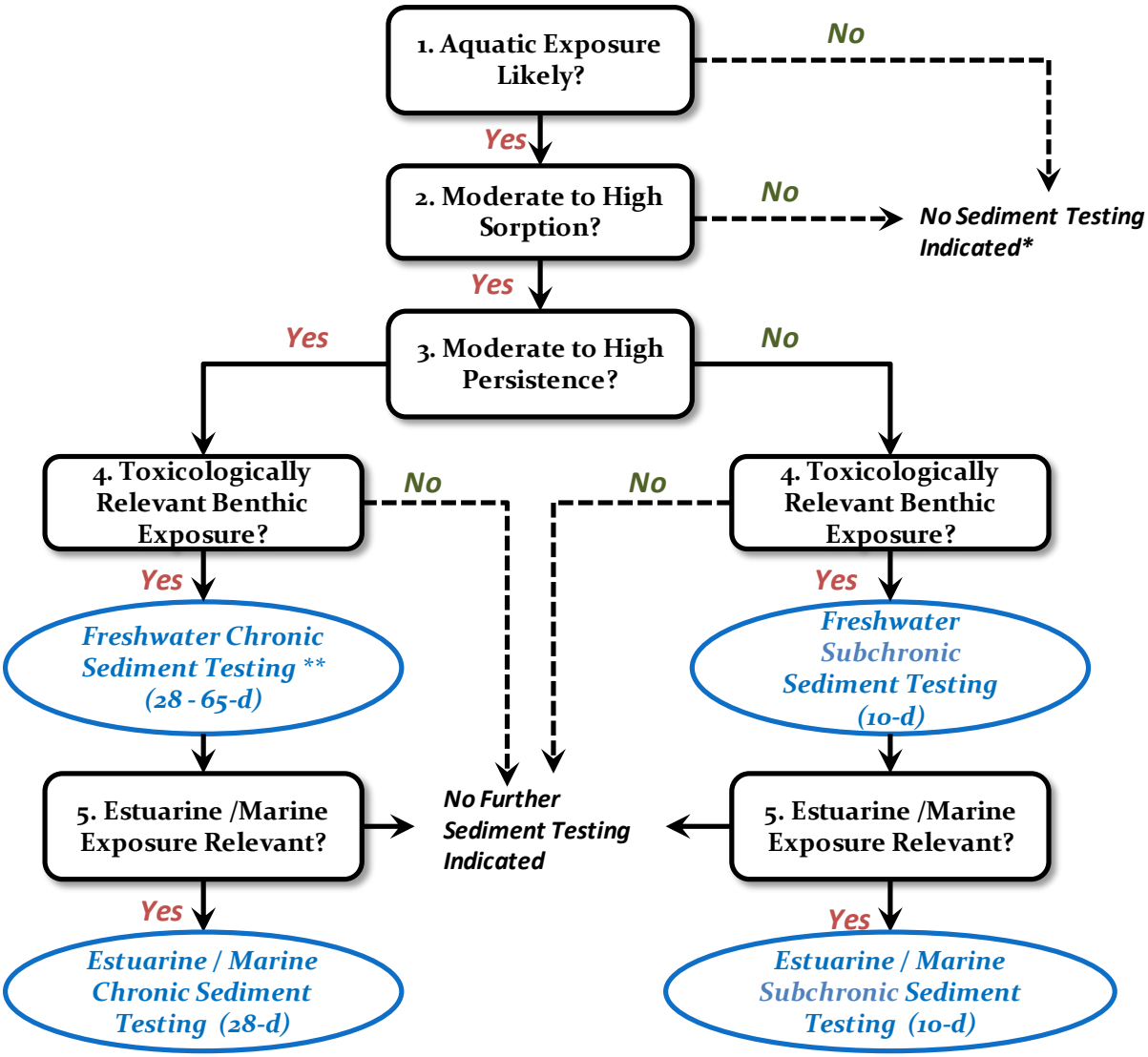

* Sediment testing may be required when evidence suggests available water column invertebrate test species are not adequate surrogates for risk assessment purposes (see Section 2.2).
** Chronic (life cycle) tests may be required as part of a tiered approach based on results of subchronic 10-d tests (see Section 3.2.1).

Figure 1. Conceptual Framework for Requesting for Sediment Toxicity Data (see Section number in parentheses for appropriate guidance) as interpreted from 40 CFR Part 158 Subpart G.

2.1 Likelihood of Aquatic Exposure

The first step in determining the need for sediment toxicity testing involves evaluating the likelihood that aquatic organisms would be exposed to the pesticide in question. According to 40 CFR Part 158, Subpart G, the likelihood of aquatic exposure is determined based on the use pattern of the pesticide. Specifically, whole sediment toxicity testing is **conditionally required** for all four outdoor use categories including:

- terrestrial uses (terrestrial food crop, terrestrial feed crop, and terrestrial nonfood crop);
- aquatic uses (aquatic food crop and aquatic nonfood);
- forestry uses; and
- residential outdoor uses.

Generally, whole sediment toxicity testing would **not** be considered for indoor uses or greenhouse uses, unless other lines of evidence (*e.g.,* pesticide monitoring data in sediments) clearly indicate that these pesticide use patterns are likely to result in pesticide exposure of benthic invertebrates. Other exceptions to this general guide may include uses that result in substantial pesticide release 'down the drain' (*e.g.,* pet shampoos, fabric treatments) and where these products may then appear in sludge from Publically Owned Treatment Works (POTW) facilities.

.

2.2 Moderate to High Sorption Potential

The second step in deciding whether or not to request sediment toxicity testing involves evaluating the extent to which the pesticide is likely to sorb onto sediment particles. This sediment sorption potential is evaluated using pesticide fate property data including the solid-water distribution coefficient (K_d)[2], the organic carbon normalized solid-water distribution coefficient (K_{OC}), and the octanol-water partition coefficient (K_{OW}). The greater the value of each of these parameters, the greater the extent to which the pesticide is expected to sorb onto sediment particles. All else being equal, pesticides with higher sorption (partitioning) values are expected to result in greater exposure of benthic-dwelling invertebrates compared to pesticides with lower sorption values.

According to 40 CFR Part 158 Subpart G, pesticide sorption onto sediment particles is considered a trigger for sediment toxicity testing (*i.e.,* moderate to high sorption as specified in **Figure 1**) if **any** of the following conditions exist:

1. The K_d is ≥ 50 L/kg-solid
2. The K_{OC} is ≥1000 L/kg-organic carbon
3. The log K_{OW} is ≥ 3

[2] "Solid" may refer to soil or sediment.

As indicated in the preamble to 40 CFR Part 158 (p. 60944), values used for K_d and K_{OC} reflect **mean values** from the appropriate soil batch equilibrium studies.[3] If reliable sediment-based K_{OC} values are available, these may also be considered separately for comparison to the partitioning trigger. Although not explicitly discussed in the Part 158 regulations, it is also reasonable to consider a mean of appropriate K_{OW} values when multiple values are available to compare against the K_{OW} trigger above. As further discussed in the preamble of the Part 158 regulations, the K_d trigger of 50 was chosen to represent 80% sorption of the chemical to sediments with an organic carbon (OC) content of 2%. It is important to note that exposure to benthic invertebrates would still be expected to some extent for chemicals with K_d, K_{OC}, and K_{OW} values below the numeric triggers indicated above. However, in these circumstances, the predominant exposure route would be through the water column not benthic sediment. Therefore, addressing risks to water column dwelling invertebrates would be expected to encompass risk concerns to benthic dwelling invertebrates, taxonomic differences in species sensitivity notwithstanding. In situations where available data indicates standard water column invertebrate test species are not adequate surrogates for assessing risks to benthic invertebrates, sediment testing may be considered even when the partitioning triggers described previously are not exceeded. An example includes the much greater acute sensitivity of chironomids to neonicotinoid insecticides compared to *Daphnia*. Notably, water column tests can currently be conducted with some benthic invertebrate species on an acute basis (*e.g., C. dilutus*, *H. azteca*). However, chronic testing with these species currently requires the use of sediment toxicity test methods.

2.3 Moderate to High Persistence[4]

Information on the pesticide's environmental persistence is used primarily for determining whether the subchronic[5] (10-d) **<u>or</u>** chronic (28 to 60-day) whole sediment toxicity tests are considered more appropriate. Specifically, if **aerobic soil or aerobic aquatic metabolism half life is ≤10 days**, the subchronic (10-d) sediment toxicity test is generally considered more appropriate. Conversely, if the half life from the aerobic soil or aerobic aquatic metabolism studies is >10 days, the chronic (28 to 65-d) sediment toxicity test is generally considered more appropriate. If multiple values of aerobic soil or aerobic aquatic metabolism half lives are available and considered of equal reliability, the risk assessor should select the highest measured half life value for comparison with the 10-d half life trigger.

The basis for these persistence triggers pertains to selecting the most appropriate design of the sediment toxicity test rather than type of endpoints available from the tests. For example, unlike most standard water column toxicity tests, sediment toxicity tests are spiked <u>once</u> and prior to test initiation.

---

[3] Values of K_d and K_{OC} are measured under OPPTS Guideline 835.1230. Desorption coefficients measured in the guideline are not used for this evaluation.

[4] Note: the term "moderate to high persistence' is being used here qualitatively to distinguish chemicals with half lives greater than 10 days only for the purpose of sediment toxicity testing. Its use here does not imply applicability outside of the context of this guidance.

[5] Although the 40 CFR Part 158 rulemaking refers to the 10-d sediment toxicity tests as "acute," analysis of their duration relative to species life history and associated toxicity endpoints indicates the 10-d tests are more representative of subchronic tests, such as the fish early life stage test. When finalized, the 850.1735 and 850.1740 will refer to the 10-d sediment tests as subchronic tests. Therefore, they are referred to here as "subchronic (10-d) tests" for reasons of clarity.

Therefore, concentrations of short-lived pesticides (*e.g.,* half life ≤10-d) will decline substantially over the duration of the test such that a subchronic (10-d) test would more appropriate for quantifying the necessary dose-response information compared to a much longer chronic (28-65-d) toxicity test.

2.4 Toxicological Relevance of Benthic Exposure

Evaluating the toxicological relevance of benthic exposure to the pesticide of concern is the final step in determining the need for sediment toxicity test data. In this step, the likelihood that estimated or measured pesticide concentrations (*e.g.,* EECs) in sediment would lead to risk concerns for benthic invertebrates is specifically considered. The evaluation process essentially involves comparing pesticide EECs in sediment (modeled or monitored concentrations) to toxicity test endpoints for benthic invertebrates or water column invertebrates (as a surrogate for benthic invertebrates). In addition, the uncertainty associated with each type of EEC vs. toxicity comparison should be considered.

With respect to evaluating toxicological relevance of sediment exposure concentrations, 40 CFR Part 158 contains the following "sediment toxicity trigger" in considering the need for chronic (life cycle) sediment toxicity testing:

EEC in sediment > 0.1 • acute LC_{50}/EC_{50} value

However, no additional guidance is provided in the 40 CFR Part 158 rule regarding which EEC duration and which LC_{50}/EC_{50} value should be used in this comparison. Furthermore, no analogous sediment toxicity triggers are specified in the 40 CFR Part 158 rule regarding the need for subchronic (10-d) sediment toxicity tests.

Based on other information directly related to the 40 CFR Part 158 rule, it is apparent that the Agency intended to consider the toxicity of a pesticide in its determination of the need for chronic **and** subchronic (10-d) sediment toxicity testing. Specifically, in the Preamble to the Part 158 rulemaking, the Agency states:

> *"Once the Agency determines or extrapolates that the use pattern has the likelihood for chemical exposure to an aquatic system the triggers for persistence and adsorption are reviewed.* ***Toxicity will be taken into consideration relative to potential exposure."*** [emphasis added].

Furthermore, in response to numerous public comments on the sediment toxicity testing triggers proposed in the 2005 Part 158 proposed rule[6], the Agency states:

> *"The Agency must determine if the proposed use pattern will result in the compound reaching an aquatic system via drift and/or runoff at levels that could result in risk to aquatic organisms. This*

[6] USEPA. 2007. Response to Comments to Part 158 Rule Proposed March 11, 2005 Docket ID: OPP-2004-0387, p. 57. (available at: http://www.regulations.gov/#!documentDetail;D=EPA-HQ-OPP-2004-0387-0178)

potential for exposure to an aquatic system is determined through appropriate modeling or monitoring data. Once the Agency determines or extrapolates that the use pattern has the likelihood for chemical exposure to an aquatic system the triggers for persistence and adsorption are reviewed (previously discussed). ***Toxicity will be taken into consideration relative to potential exposure."*** [emphasis added]

Given the limited information in the 40 CFR Part 158 rule on the sediment toxicity comparison issue, additional guidance is provided below to assist risk assessors in evaluating a pesticide's toxicity as part of determining the need for sediment toxicity testing. It is recommended that risk assessors consider multiple lines of evidence in assessing the toxicological relevance of benthic sediment EECs for deciding when to recommend sediment toxicity testing.

2.4.1. Toxicity Evaluation for Chronic Sediment Testing

As stated in the 40 CFR Part 158 rule, the need for chronic (28 to 65-d) sediment toxicity tests is indicated when the "**EEC in sediment is greater than 0.1 • acute LC_{50}/EC_{50} value**." Given the lack of specificity in the 40 CFR Part 158 rule as to which EEC and which LC_{50}/EC_{50} value should be used in this comparison, it is recommended that risk assessors consider multiple lines of evidence for evaluating the toxicological relevance of sediment exposures with respect to the need for chronic toxicity testing of benthic invertebrates. Examples of such lines of evidence are presented in a series of comparisons below.

Comparison 1. Sediment EEC vs. Subchronic (10-d) Sediment NOAEC:

Compare the 21-d EEC in sediment (pore water or bulk sediment) to the lowest NOAEC from a subchronic (10-d) sediment toxicity test (pore water or bulk sediment[7]). ***If the 21-d EEC $\geq$ 0.1 • subchronic (10-d) sediment, chronic sediment toxicity testing is indicated.***

Comparison 1 presumes that NOAEC values from subchronic (10-d) sediment toxicity tests will be available for making such comparisons. It is based on the NOAEC from the subchronic sediment toxicity test since the NOAEC provides the toxicological basis for assessing subchronic and chronic risks of pesticides to benthic invertebrates (see Section 4). Notably, subchronic (10-d) sediment tests do not involve life cycle exposures, nor do they consider effects on reproduction. Therefore, NOAECs from chronic sediment tests may be considerably lower than NOAECs from subchronic (10-d) tests. To account for the expected differences in species sensitivity measured using a subchronic (10-d) and chronic (full life cycle) sediment toxicity test, a value of 0.1 is applied to the NOAEC from the subchronic (10-d) NOAEC[8]. In cases where the subchronic (10-d)

[7] Bulk sediment comparisons should be done on an organic carbon basis, where appropriate for the pesticide of interest. See organic carbon normalization section of this memo for additional guidance.

[8] A comparison of sediment toxicity data generated by the USGS Columbia, MO Research Laboratory suggest that a value of 0.1 would account for observed differences in NOAECs from subchronic (10-d) and chronic (life cycle) sediment toxicity tests. As additional sediment toxicity data are generated, re-evaluation of the 0.1 factor is appropriate to ensure it is adequately

sediment toxicity test results are not available, the risk assessor should consider other types of comparisons, such as those specified below, when evaluating the need for chronic sediment toxicity testing.

Comparison 2. Pore water EEC vs. Water Column NOAEC:

Compare the 21-d average sediment EEC in pore water to the lowest NOAEC from a chronic water column toxicity test with the most sensitive invertebrate species. **If the 21-d pore water EEC $\geq$ 1.0 • chronic water column NOAEC, the need for chronic sediment toxicity testing is indicated.**

This comparison is particularly useful when toxicity endpoints are unavailable from subchronic (10-d) sediment toxicity tests. Comparison 3 assumes that the chronic sensitivity of invertebrates on a water column basis provides a reasonable representation of their chronic sensitivity on a sediment pore water basis. The assumption of similar sensitivity of a given invertebrate species on the basis of water column and pore water exposure is supported by evaluations conducted for deriving USEPA EqP sediment toxicity benchmarks[9]. If the 21-d pore water EEC/chronic water column NOAEC >1, the need for chronic sediment toxicity testing is clearly indicated. It should be noted, however, that in some cases sediment test species (*e.g., Hyalella, Chironomus*) may be significantly more sensitive compared to standard OPP invertebrate test species (*e.g., Daphnia*). This is the case for pyrethroids and neonicotinoids, where *H. azteca* and *C. riparius, respectively,* are much more acutely sensitive compared to *D. magna*. Furthermore, sediment toxicity tests consider other routes of exposure (*e.g.,* ingestion of contaminated sediment and food) that are not fully considered in water column tests. **Therefore, risk assessors should not necessarily dismiss the need for sediment toxicity testing when ratios of the 21-d pore water EEC/water column invertebrate chronic NOAEC are less than 1, particularly as the ratio value approaches unity (*e.g.,* 0.1 -1) and when information suggests tested water column invertebrates may not adequately represent benthic invertebrate sensitivity.**

Comparison 3. Pore water EEC vs. Acute LC_{50}/EC_{50}

Compare the peak sediment EEC (pore water or bulk sediment) to the lowest LC_{50}/EC_{50} from an acute water column toxicity test with the most sensitive invertebrate species. ***If the peak pore water EEC >0.05 • acute water column invertebrate LC_{50}/EC_{50}, need for chronic sediment toxicity testing is indicated.***

Similar to comparison #2 above, comparison #3 assumes that the acute sensitivity of aquatic invertebrates on a water column basis provides a reasonable representation of their sensitivity on a sediment pore water basis. If the peak pore water EEC/water column invertebrate LC_{50}/EC_{50}

---

protective.

[9] For example, see: USEPA. 2003. Procedures for the Derivation of Equilibrium Partitioning Sediment Benchmarks (ESBs) for the Protection of Benthic Organisms: Dieldrin. EPA/600/R-02/010. Office of Research and Development, Washington, DC 20460.

>0.05, the need for chronic sediment toxicity testing is indicated. The 0.05 cutoff was selected because it corresponds to the Federally threatened/endangered species LOC for aquatic animals. Risk assessors should consider the aforementioned uncertainty regarding potential species sensitivity differences among commonly tested organisms in water column vs. those tested in sediment. **Therefore, risk assessors should not necessarily dismiss the need for chronic sediment testing when the ratio of the peak pore water EEC/ water column LC_{50}/EC_{50} is less than 0.05, particularly as the ratio begins to approach the 0.05 value and when information suggests tested water column invertebrates may not adequately represent benthic invertebrate sensitivity.**

The previous comparisons assume that the sediment EEC is derived using appropriate aquatic exposure models of pesticide use (*e.g.,* PRZM/EXAMS). In the near future, sediment EECs (pore water and dry weight) will be readily obtained from the implementation of the Surface Water Calculator model. In the interim, guidance on obtaining sediment EECs from PRZM/EXAMs (PE5) is provided in **Attachment 2** based on output files described in **Attachment 3**. In situations where sediment EECs are not available from past assessments (e.g., for new chemical/new use assessments) high end estimates of sediment EECs may be obtained using the MS Cotton scenario.

In addition to model-based EECs, risk assessors should also consider available sediment monitoring data for the pesticide of concern in relation to its toxicity to aquatic invertebrates as an additional line of evidence. It is noted, however, that available sediment monitoring data for pesticides may not capture temporal or spatial variability associated with short-term exposure events and thus, may underestimate high end exposures that may actually occur in the aquatic environment.

2.4.2. Toxicity Evaluation for subchronic (10-d) Sediment Testing

As indicated previously, the 40 CFR Part 158 rule does not contain explicit toxicity-based triggers for evaluating the need for subchronic (10-d) sediment toxicity tests. However, the Agency is on record as indicating it will consider toxicity relative to exposure when requiring sediment toxicity testing. Furthermore, the targeting of testing requirements away from situations where results are not likely to inform risk management decisions is consistent with the OPP's Integrated Approaches for Testing and Assessment (IATA)[10] and the National Research Council's (NRC) recommendations on toxicity testing in the 21st century.[11] In this regard, it is recommended that risk assessors consider the following comparisons in evaluating the need for subchronic (10-d) sediment toxicity testing.

Comparison 4. Pore water EEC vs. Water Column NOAEC:

Compare the 21-d average sediment EEC in pore water to the lowest NOAEC from a chronic water column toxicity test with the most sensitive invertebrate species. ***If the 21-d pore water EEC > 1.0 • chronic water column invertebrate NOAEC, the need for subchronic (10-d) sediment toxicity testing is indicated.***

[10] http://www.epa.gov/pesticides/science/testing-assessment.html
[11] http://www.nap.edu/openbook.php?record_id=11970 .

The evaluation of toxicological relevance of sediment exposure for determining whether subchronic (10-d) sediment toxicity tests are needed can also be assessed using water column chronic toxicity endpoints and sediment EECs. Comparison #4 is identical to comparison #2 described previously, except that it is used to trigger subchronic testing here. Due to uncertainties regarding sensitivity differences between water column and benthic test species and the consideration of additional exposure routes in sediment tests, **risk assessors should not necessarily dismiss the need for sediment toxicity testing when ratios of the 21-d pore water EEC/water column invertebrate chronic NOAEC are less than 1, particularly as the ratio value approaches unity (*e.g.,* 0.1 -1).**

Comparison 5. Pore water EEC vs. Acute LC_{50}/EC_{50}:

Compare the peak sediment EEC (pore water or bulk sediment) to the lowest LC_{50}/EC_{50} from an acute water column toxicity test with the most sensitive invertebrate species. **If the peak pore water EEC > 0.05 • acute water column invertebrate LC_{50}/EC_{50}, the need for subchronic (10-d) sediment toxicity testing is indicated.**

Similar to comparison #3 above, comparison #5 assumes that the acute sensitivity of invertebrates on a water column basis provides a reasonable representation of their sensitivity on a sediment pore water basis. If the peak pore water EEC/water column invertebrate LC_{50}/EC_{50} > 0.05, the need for subchronic (10-d) sediment toxicity testing is indicated. The 0.05 cutoff is used because it corresponds to the Federally threatened/endangered species LOC for aquatic animals. Risk assessors should consider the aforementioned uncertainty regarding potential species sensitivity differences among commonly tested organisms in water column and sediment toxicity tests should be considered. **Therefore, risk assessors should not necessarily dismiss the need for subchronic (10-d) sediment testing when the ratio of the peak pore water EEC/ water column LC_{50}/EC_{50} is less than 0.05, particularly as it approaches the 0.05 value and when information suggests tested water column invertebrates may not adequately represent benthic invertebrate sensitivity.**

As described previously in Section 2.4.1, risk assessors should also consider available sediment monitoring data for the pesticide of concern in relation to its toxicity to aquatic invertebrates as an additional line of evidence in determining the need for sediment toxicity testing.

3. Which Benthic Invertebrate Species Should Be Tested?

3.1 Recommend Species for the Subchronic (10-d) Tests

For the subchronic (10-d) freshwater sediment toxicity tests, procedures are described for two species in the current public draft OPPTS 850.1735 guideline: the amphipod, *Hyalella azteca*, and the midge,

Chironomus dilutus. The midge and amphipod have different life histories, occupy different taxonomic groups (amphipods are crustaceans, while midges are insects) and generally interact with sediments in different ways. Chironomid larvae are more infaunal (submerged in the sediment) whereas amphipods are more epibenthic (moving in and out of the surficial sediment layer). As a result, the amphipod and midge may experience differences in chemical uptake relative to different exposure routes (pore water respiration, sediment ingestion, food ingestion, dermal uptake, respiration of overlying water). Furthermore, physiological and taxonomic differences between midges (Class: Insecta; Order: Diptera) and amphipods (Class: Malacostraca; Order: Amphipoda) may result in substantial sensitivity differences between these taxa, especially with the highly-specific modes of action of many pesticides. For example, substantial differences in sensitivity have been observed for some pyrethroid insecticides, with *Hyalella* generally being more sensitive than *Chironomus*. On the contrary, the midge has been shown to be highly sensitive relative to other crustaceans to some neonicotinoid insecticides. Therefore, given that pesticides subject to sediment toxicity testing are expected to partition extensively to sediments in aquatic systems, it is recommended that both the amphipod and midge tests be requested for either the subchronic (10-d) or chronic sediment assays.

For the subchronic (10-d) estuarine/marine sediment toxicity test, procedures for multiple species of estuarine/marine amphipods are described in the public draft OPPTS 850.1740 guideline including: *Ampelisca abdita*, *Eohaustorius estuarius*, *Rhepoxynius abronius*, and *Leptocheirus plumulosus*. If the chemical is applied directly to estuarine/marine water bodies or is expected to enter these areas in environmentally-relevant concentrations, then the estuarine/marine sediment tests should be solicited, assuming the other aforementioned conditions for sediment toxicity requests are met. Only one species of estuarine/marine amphipod is typically requested and the most commonly tested species to date for pesticide registration has been *L. plumulosus*.

3.2 Recommend Species for the Chronic (Life Cycle) Tests

For chronic sediment toxicity testing, the same rationale described for selection of species for subchronic (10-d) toxicity testing applies. That is, chronic freshwater sediment toxicity tests should include both an amphipod and midge species and one estuarine/marine species should be tested if environmentally-relevant concentrations are expected (or in cases where the pesticide is applied directly to estuarine/marine water bodies). Currently, the 850 guidelines for chronic sediment toxicity testing are being finalized. However, Agency-wide guidelines are available for chronic testing of freshwater[12] and estuarine/marine organisms[13]. Therefore, as indicated in 40 CFR Part 158, the registrant is required to submit a protocol for approval prior to initiating the study until such time as the OCSPP 850 chronic sediment testing guidelines are published.

---

[12] USEPA 2000. Methods for Measuring the Toxicity and Bioaccumulation of Sediment-associated Contaminants with Freshwater Invertebrates. EPA 600/R-99/064. March.

[13] USEPA 2001. Methods for Assessing the Chronic Toxicity of Marine and Estuarine Sediment-associated Contaminants with the Amphipod *Leptocheirus plumulosus.* EPA 600/R-01/020. March.

3.2.1 Optional Tiered Testing Strategy for Chronic Sediment Testing

If following the previous evaluation of a pesticides aquatic exposure potential (Section 2.1), sorption potential (Section 2.2), persistence (Section 2.3), and toxicological relevance (Section 2.4) chronic sediment toxicity testing is indicated, **a tiered testing strategy** may be considered for implementing the necessary Data Call-In requirements. In this approach, sediment toxicity testing would first be conducted with the aforementioned species using the subchronic (10-d) sediment toxicity test guidelines (OSCPP 850.1735 and 850.1740). Then, pending a comparison of estimated environmental concentrations (EEC) in sediment and pore water with toxicity results from the 10-d sediment toxicity studies, the need for one or more chronic sediment toxicity studies would be determined (*e.g.,* per comparison #1). This tiered testing approach has the potential advantage of reducing the number of chronic (life cycle) studies that would be needed when results of the 10-d (subchronic) tests in conjunction with sediment EECs indicate chronic testing is not likely to alter risk assessment conclusions. In some cases, however, this tiered testing approach may result in the conduct of both a 10-d (subchronic) and a chronic (life cycle) study.

Appendix A provides generic examples of Data Call-in Justifications for both acute and chronic sediment toxicity studies. These should be modified to fit the specific circumstances of each pesticide.

4. How Should Risk To Benthic Invertebrates Be Estimated?

A variety of approaches are available for deriving risk quotients (RQs) for benthic invertebrates. These approaches differ according to:

- the environmental medium chosen for expressing the EEC (pore water, sediment);
- the environmental medium chosen for expressing toxicity (pore water, sediment, water column); and
- the source of the EEC (PRZM/EXAMS, sediment monitoring data).

Following considerable review, it is apparent that each approach for deriving a benthic invertebrate RQ has different strengths and limitations that depend on the quantity and quality of data available for the pesticide of concern. For example, sediment pore water is often a dominant route of exposure for infaunal benthic invertebrates and thus is considered appropriate for expressing the EEC and toxicity (NOAEC). For some highly hydrophobic chemicals (*e.g.,* Log K_{OW} >5), however, measured concentrations in pore water from sediment toxicity tests can be highly uncertain due to analytical error and factors that affect chemical bioavailability (see **Appendix B** for a discussion of bioavailability). Furthermore, some benthic invertebrates may be exposed to a greater extent via ventilation of overlying water or through ingestion of contaminated sediment. Although measurement of chemical concentrations in bulk sediment may be subject to less analytical error compared to their measurement in pore water for some pesticides, estimating the bioavailability of pesticide in bulk sediment can be uncertain due to factors that affect chemical sorption (*e.g.,* differences in organic carbon quality and composition). From a toxicological perspective, choosing to express the NOAEC for benthic invertebrates on results from a sediment toxicity test is reasonable. However, sediment toxicity testing is commonly available for a

limited number of species (2 or 3) whereas for some pesticides that have been registered for one or more decades, many more water column toxicity tests of invertebrates may be available. In these situations, the range in species sensitivity represented by invertebrates tested in the water column may better reflect the sensitivity of benthic invertebrates (on a pore water basis) compared to that defined by 2 or 3 sediment toxicity studies. Monitoring data can provide an important line of evidence in characterizing risk as part of the "Risk Description."

Given the chemical-specific nature of the strengths and limitations of each approach for deriving benthic invertebrate RQ values, **multiple approaches are recommended for deriving RQ values in estimating risk to benthic invertebrates**. This recommendation is somewhat analogous to using multiple types of RQ values for birds and mammals to estimate risk (*e.g.,* dose- and diet-based RQs). A depiction of the various types of RQ values that could be derived with a full complement of sediment and water column toxicity data is shown in **Table 1**. Details of each of these four RQ derivation approaches are discussed below.

Table 1. Recommended Approaches for Deriving RQ values for Benthic Invertebrates

Exposure Basis	Toxicity Basis	Freshwater RQ		Saltwater RQ	
		Acute	*Chronic*	*Acute*	*Chronic*
1. Modeled Pore Water EEC	**Measured Pore Water NOAEC**	**n.a.**	✓	**n.a.**	✓
2. Modeled Sediment EEC[1]	**Measured sediment NOAEC[1]**	**n.a.**	✓	**n.a.**	✓
3. Modeled pore water EEC	**Measured water column acute LC_{50}/EC_{50} or chronic NOAEC**	✓	✓	✓	✓
4. Monitored sediment concentration[1, 2]	**Measured sediment NOAEC[1]**	**n.a.**	✓	**n.a.**	✓

[1] Where appropriate, sediment EEC and toxicity values should be normalized on an organic carbon basis (*e.g.,* nonionic organic chemicals); normalization with other ligands or sediment dry weight may be appropriate for other classes of pesticides (*e.g.,* metals, ionizable organic chemicals)

[2] Comparisons based on monitoring data should be conducted as part of "Risk Description"

n.a. = not applicable because sediment toxicity tests typically reflect subchronic or chronic exposures rather than acute exposures.

4.1 Derivation of Chronic RQ Values

Derivation of chronic RQ values for benthic invertebrate can, in theory, be derived using all four approaches illustrated in **Table 1**.

Approach 1: Chronic Pore Water RQ (Using Sediment Toxicity Data). Approach 1 involves dividing the modeled EEC in sediment pore water by the sediment toxicity-based NOAEC measured in pore water:

$$\frac{\text{21-d Average EEC in Pore Water (µg a.i./L-pw)}}{\text{Chronic or Subchronic Pore Water NOAEC (µg a.i./L-pw)}}$$

The recommended 21-d average EEC reflects a 1-in-10 year return frequency analogous to that used to estimate chronic RQ values for water column invertebrates. The 21-d average EEC is also representative of the overall range in exposure durations that are typical of chronic and subchronic sediment toxicity studies conducted under OCSPP 850 Guidelines (generally 10-65 days). The sediment pore water NOAEC used for the denominator of this RQ should reflect the most sensitive NOAEC within freshwater and estuarine/marine taxa that is considered appropriate for quantitative use in risk assessment.

Approach 2: Chronic Sediment RQ (Using Sediment Toxicity Data). Approach 2 consists of dividing the modeled EEC in bulk sediment by the sediment toxicity-based NOAEC measured in bulk sediment.

$$\frac{\text{21-d Average Sediment EEC (µg a.i./kg-dry wt.[or kg-OC])}}{\text{Chronic or Subchronic Sediment NOAEC (µg a.i./ kg-dry wt. [or Kg-OC])}}$$

When appropriate, bulk sediment-based RQ values should be determined on a sediment organic carbon basis in order to account for the influence of sediment organic carbon on the bioavailability of the pesticide. The organic carbon content in sediment is referred to as total organic carbon (TOC) and does not include mineralized carbon present as carbonates or bicarbonates. For many hydrophobic organic chemicals, partitioning and toxicity are commonly influenced by the amount of organic carbon present on the solid phase in addition to the type of organic carbon present (*e.g.,* humic acid, fulvic acid, soot carbon). The following equation can be used to convert the bulk sediment EECs and toxicity endpoints expressed on a sediment dry weight basis to EECs and endpoints on an OC-normalized basis. Notably, this equation accounts for the amount of organic carbon present but not the type of organic carbon present.

$$\text{µg a.i./kg-OC} = \frac{\text{µg a.i./kg sediment dry weight}}{\text{kg TOC/kg sediment dry weight}}$$

where:

µg a.i. /kg dry weight is the toxicity endpoint (NOAEC) or EEC expressed in terms of bulk sediment dry weight, and

kg TOC/kg dry weight is the mass total organic carbon per mass of dry sediment.[14]

As with RQ values derived using approach #1, the sediment-based NOAEC used for the denominator of this RQ should reflect the most sensitive NOAEC within freshwater and estuarine/marine taxa that is

[14] kg TOC/kg sediment dry weight is usually reported as % TOC. The default %TOC used in the standard EXAMS pond is 4% while the % TOC in sediment toxicity studies varies (typically from 2% to 10%).

considered appropriate for quantitative use in risk assessment.

Approach 3: Chronic Pore Water RQ (Using Water Column Toxicity Data). Approach 3 consists of dividing the modeled EEC in sediment pore water by the water column toxicity-based NOAEC measured from chronic invertebrate toxicity tests:

$$\frac{\text{21-d Average EEC in Pore Water (µg a.i./L-pw)}}{\text{Chronic Water Column NOAEC (µg a.i./ L)}}$$

The sediment pore water EEC is the same as that described earlier for deriving RQ values using approach #1. However, the chronic invertebrate NOAEC is based on results from chronic water column tests with aquatic invertebrates (the most sensitive values within freshwater and estuarine/marine taxa). This approach is referred to as the equilibrium partitioning (EqP) sediment method and is considered appropriate for organic chemicals whose partitioning is governed by organic carbon. The EqP approach is based on the Agency Equilibrium Partitioning Sediment Benchmarks (USEPA, 2002[15]). This extrapolation method is useful for estimating potential sediment exposure values, as well as sediment toxicity values that can be used in a screening level risk assessment. The EqP theory holds that a nonionic organic chemical in sediment partitions between sediment organic carbon, interstitial (pore) water and lipid phases of benthic organisms. At equilibrium, if the concentration in any phase is known, then the concentration in the other phases can be predicted through the K_{oc}. Therefore, EECs can be calculated from the pore water concentration (an output from PRZM/ EXAMS) and compared to the toxicity endpoints from the appropriate water column invertebrate toxicity tests. EqP theory assumes that all organic carbon contained in the TOC measurement have equal sorption capacities for chemicals and that partitioning to sediments is described by TOC alone (not other materials such as mineral-coated clays). Detailed discussion of EqP can be found in USEPA 2002.

Approach 4: Chronic Sediment RQ (Using Monitored Sediment Concentrations). Approach 4 consists of dividing the monitored concentration of a pesticide in bulk sediment by the sediment toxicity-based NOAEC measured in bulk sediment.

$$\frac{\text{Monitoring-Based Sediment Exposure Concentration (µg a.i./kg-dry wt. [or Kg-OC])}}{\text{Chronic or Subchronic Sediment NOAEC (µg a.i./ kg-dry wt. [or Kg-OC])}}$$

The choice of the value for the sediment exposure concentration depends largely on the quantity and representativeness of sediment monitoring data. Ideally, the monitored sediment concentration should reflect an exposure concentration analogous to the model-based sediment EEC. In practice, however, such data will not be available to compute an analogous 21-d average EEC with a 1-in-10 year return frequency. Therefore, risk assessors should use best professional judgment in selecting the appropriate monitored sediment concentration. In many cases, this may be the maximum value or upper 95th or 99th

[15] USEPA 2002. Technical Basis for the Derivation of Equilibrium Partitioning Sediment Guidelines (ESGs) for the Protection of Benthic Organisms: Nonionic Organics [Draft]. EPA 822-R-02-041.October.

percentile of the detected concentrations in sediment. As described previously, monitoring-based RQ values should be described in the Risk Description section as an additional line of evidence to support the risk assessment conclusions.

4.2 Derivation of Acute RQ Values

The current battery of sediment toxicity studies outlined in the OSCPP 850 and OECD sediment toxicity studies do not represent exposures typical of acute toxicity tests with aquatic animals (e.g., 48-96 hours). Therefore, acute toxicity endpoints will not likely be available from sediment toxicity studies. In these cases, the acute RQ value can be estimated using water column toxicity data as described in approach #3 above:

$$\frac{\text{Peak EEC in Pore Water (µg a.i./L-pw)}}{\text{Acute Water Column } LC_{50} \text{ or } EC_{50} \text{ (µg a.i./ L)}}$$

Instead of the 21-d average EEC as described for the chronic RQ derivation, the peak 1-in-10 year EEC in pore water is used. In addition, the acute LC_{50} or EC_{50} is used instead of the chronic NOAEC. As described previously, RQ values should be derived separately for freshwater and estuarine/marine benthic invertebrates, understanding that the numerator (EEC) would be identical.

5. Which Levels Of Concern Should Be Applied?

The same LOCs for other aquatic organisms should be applied for evaluation of risk to sediment-dwelling invertebrates.

Acute risk, non-listed species LOC: 0.5
Acute risk, restricted use LOC: 0.1
Acute risk, listed species LOC: 0.05
Chronic risk, non-listed and listed LOC: 1.0

6. What Common Assumptions And Sources Of Uncertainties Should Be Discussed In The Risk Assessment?

Many of the standard assumptions and sources of uncertainty associated with assessing risks to water column organisms apply to sediment dwelling organisms (*e.g.,* use of limited number of surrogate test species, PRZM/EXAMS modeling assumptions, use of maximum pesticide application rates, *etc.*). However, there are other key assumptions and sources of uncertainty that are more specific to the aforementioned procedures for assessing risk to benthic invertebrates. For **approach #1** (pore water RQs), one key uncertainty that should be discussed is the bioavailability of pesticide measured in pore water from the sediment toxicity test. For nonionic organic chemicals with log K_{OW} >5, dissolved organic carbon in pore water can substantially reduce chemical bioavailability and toxicity. In such cases, it may be desirable to estimate the freely dissolved concentration of chemical in the pore water based on

sediment concentrations, TOC in sediment and K_{OC} since measured concentrations in pore water may grossly underestimate toxicity. An illustration of the effect of organic carbon (dissolved and particulate) on the bioavailable (freely dissolved) fraction of a pesticide is shown in **Figure 2** for different values of log K_{OW}. An additional consideration for benthic invertebrate RQ values derived using **approach #1** is analytical error and uncertainty in pore water measurements, particularly with concentrations that approach the limit of quantification.

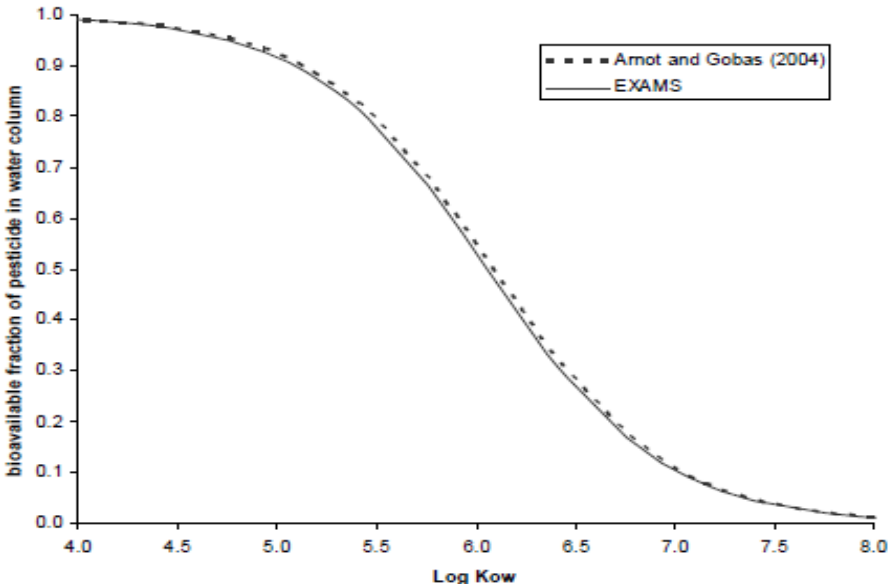

Figure 2. Estimated freely dissolved (bioavailable) fraction of a pesticide in water column according to the EXAMS and Arnot and Gobas (2004) models parameterized according to the OPP standard pond (Source: OPP KABAM Users Guide, USEPA 2009).

With **approach #2**, concentrations of pesticide measured in sediment from toxicity tests are relatively high compared to those of pore water (**approach #1**). However, risk assessors should verify that analytical methods were sufficient to extract adequate amounts of chemical from test sediments. In addition, previously discussed assumptions regarding normalizing to organic carbon should be briefly described. In some cases for highly hydrophobic pesticides, the risk assessor may wish to evaluate the sensitivity of risk estimates to assumptions regarding 'burial' of pesticide by deposited sediments. Methods for estimating the impact of sediment burial have been incorporated into the most recent version of the EXAMS model.

For **approach #3**, the appropriateness of water column toxicity tests as surrogates of benthic organism sensitivity should be discussed. For some pesticides with highly-specific modes of action, considerable variability may occur among aquatic invertebrates in different taxonomic groups.

For **approach #4**, the primary concern is the adequacy of monitoring data for representing 'high end' exposures expected of aquatic ecosystems which are highly vulnerable to pesticide use. Importantly, most aquatic monitoring studies lack sufficient temporal and spatial resolution to capture truly high end

exposures that are comparable to model-derived EECs. Therefore, a lack of risk as indicated by comparisons with sediment monitoring data does not necessarily preclude risk.

EFED Sediment Toxicity Team:

Keith Sappington
Elyssa Gelmann
Donna Judkins
Amanda Solliday
Katrina White

Appendix A. Generic Language on Justification of Sediment Toxicity Data Requests

Guideline Numbers: 850.1735 and 850.1740 **Study Titles: Whole Sediment: Subchronic Freshwater Invertebrates** **Whole Sediment: Subchronic Marine Invertebrates**
Rationale for Requiring the Data
No subchronic sediment toxicity tests for freshwater or marine invertebrates have been submitted to satisfy the Agency's updated data requirements for outdoor uses in 40 CFR Part 158 (October 26, 2007). Benthic organisms may be exposed to run-off or spray drift from applications used in [terrestrial, aquatic, forestry and/or residential outdoor uses], based on the fate properties of [chemical X]. The following lines of evidence suggest the potential for ecologically significant exposure of benthic-dwelling organisms to pesticide X [INSERT RATIONALE BASED ON SEDIMENT TRIGGERS, MONITORING DATA AND OTHER LINES OF EVIDENCE]. For freshwater sediment testing, tests on an amphipod (*e.g., Hyalella azteca)* and a midge (*e.g., Chironomus dilutus)* are requested. Both freshwater species, *Hyalella* and *Chironomus* differ substantially in their ecological niche (*i.e.,* epibenthic vs. infaunal species), life history and phylogeny. For estuarine/marine sediment testing, tests on one amphipod species is requested (*e.g., Leptocheirus plumulosus*).
Practical Utility of the Data
How will the data be used? Data from sediment toxicity studies will be used to estimate potential risks to benthic organisms associated with uses of [chemical X]. The data will reduce uncertainties associated with the current risk assessment for benthic species and will improve our understanding of the potential effects of [chemical X] on aquatic ecosystems. **How could the data impact the Agency's future decision-making?** If the data indicates that registered [chemical X] uses may pose a risk of adverse effects to non-target benthic organisms above the Agency Level of Concern, the Agency may explore decision options to mitigate this risk. The lack of these data will limit the flexibility the Agency and registrants have in coming into compliance with the Endangered Species Act, and could result in use restrictions for [chemical X] which may otherwise be avoided, or which are unnecessarily severe.

Guideline Number: None (Agency-Wide Guidelines found in USEPA 2000 and 2001) **Study Title: Whole sediment: Chronic invertebrates freshwater and marine**
Rationale for Requiring the Data
No chronic sediment toxicity tests for freshwater or marine invertebrates have been submitted to satisfy the Agency's updated data requirements for outdoor uses in 40 CFR Part 158 (October 26, 2007). Benthic organisms may be exposed to run-off or spray drift from applications used in [terrestrial, aquatic, forestry and/or residential outdoor uses], based on the fate properties of [chemical X]. The following lines of evidence suggest the potential for ecologically significant exposure of benthic-dwelling organisms to pesticide X [INSERT RATIONALE BASED ON SEDIMENT TRIGGERS, MONITORING DATA AND OTHER LINES OF EVIDENCE]. For freshwater sediment testing, tests on an amphipod (*e.g., Hyalella azteca)* and a midge (e.g., *Chironomus dilutus)* are requested. Both freshwater species, *Hyalella* and *Chironomus* differ substantially in their ecological niche (*i.e.,* epibenthic vs. infaunal species), life history and phylogeny. For estuarine/marine sediment testing, tests on one amphipod species is requested (*e.g., Leptocheirus plumulosus*). In some situations, a tiered testing strategy may be considered for requesting chronic sediment toxicity testing.. In this approach, sediment toxicity testing would first be conducted with the aforementioned species using the subchronic (10-d) sediment toxicity test guidelines (OSCPP 850.1735 and 850.1740). Then, pending a comparison of estimated environmental concentrations (EEC) in sediment and pore water with toxicity results from the 10-d

sediment toxicity studies, the need for one or more chronic sediment toxicity studies would be determined. This tiered testing approach has the potential advantage of reducing the number of chronic (life cycle) studies that would be needed when results of the 10-d (subchronic) tests in conjunction with sediment EECs indicate chronic testing is not likely to alter risk assessment conclusions. In some cases, however, this tiered testing approach may result in the conduct of both a 10-d (subchronic) and a chronic (life cycle) study.
Practical Utility of the Data
How will the data be used? Data from sediment toxicity studies will be used to estimate potential risks to benthic organisms associated with uses of [chemical X]. The data will reduce uncertainties associated with the current risk assessment for benthic species and will improve our understanding of the potential effects of chemical X on aquatic ecosystems. **How could the data impact the Agency's future decision-making?** If the data indicates that registered [chemical X] uses may pose a risk of adverse effects to non-target benthic organisms above the Agency Level of Concern, the Agency may explore decision options to mitigate this risk. The lack of these data will limit the flexibility the Agency and registrants have in coming into compliance with the Endangered Species Act, and could result in use restrictions for [chemical X] which may otherwise be avoided, or which are unnecessarily severe.

Appendix B. Bioavailability, Estimating Exposure, and Evaluating Toxicity in Sediment

1. What is bioavailability? Why is it important?

The question of what concentration of a contaminant is safe is not straight forward, as the total concentration in a media is not always equal to the amount that an organism is exposed to, especially in soils and sediment. The bioavailable portion is the portion that has the potential or tendency to enter and interact physiologically with an organism. It is this portion that is relevant in evaluating the toxicity of contaminants in soils and sediments. It is important to evaluate what the bioavailable fraction is in a toxicity test because if the total concentration in a test is considered rather than the bioavailable fraction, toxicity may be underestimated and thus, the potential for risk underestimated. Additionally, toxicity tests that consider only total concentrations will not reliably predict whether toxicity is likely to occur and the endpoints will be highly variable (*e.g.*, the results from different soils or sediments will be very different).

2. How do we currently predict exposure in risk assessments and how does that relate to the bioavailable fraction?

A. Estimating Exposure

Exposure Analysis Modeling System (EXAMS) provides freely dissolved pesticide concentrations in surface water and pore water[16]. Additionally, the pesticide concentration in sediment on a dry weight basis is normalized to the fraction organic carbon in sediment (4%) and is used as an estimated environmental concentration (EEC) in sediment risk assessments. The Environmental Fate and Effects Division's (EFED's) current risk assessment methodologies and EECs are considering the bioavailable fraction in the risk assessment.

B. Water Column Toxicity Testing

For water column toxicity tests, OPPTS Guideline 850.1000 requires that 1) water have a total organic carbon of less than 2 mg/L, 2) water be centrifuged or filtered prior to measuring the chemical concentration, and 3) that the chemical concentration be measured for all chemicals with a poor water solubility. Filtering with a 0.45 µm filter will remove any particulate organic matter in the water but may leave some dissolved organic carbon, which may make up most of the organic material in the water. As the concentration of dissolved organic carbon is low, for most chemicals this measured concentration will be within 20% of the dissolved concentration. The bioavailable fraction or dissolved concentration will only be considerably different from the total water concentration when the dissolved organic carbon concentration is high or the log K_{OW} of the compound is greater than six[17].

---

[16] Pore water is defined as the water occupying the spaces between sediment particles.

[17] Assuming a DOC concentration of 2 mg/L, for a chemical with a log K_{OW} of 6, 86% of the compound is in the freely dissolved form in a water column toxicity test.

3. How do we address bioavailability when evaluating the potential risk to sediment dwelling organisms?

A. Background on the Equilibrium Partitioning Model and Sediment Quality Guidelines

In the 1990s, sediment quality guidelines were developed based on research showing that organic matter was the primary sorbent of organic contaminants and that toxicity was better predicted by NOC concentrations in pore water and NOC concentrations in bulk sediment normalized to organic carbon rather than total sediment NOC concentrations (DiToro *et al.*, 1991b). In other words, the freely dissolved NOC concentration strongly correlated with uptake and can be thought of as a measure of bioavailability (DiToro *et al.*, 1991b). Equilibrium partitioning theory provided a means to predict chemical concentrations in pore water from chemical concentration in total sediment using sorption coefficients (DiToro *et al.*, 1991b). It predicts that organic contaminants will primarily distribute between organism lipid and sediment organic carbon (OC) and will achieve equilibrium, so that concentrations in different media may be predicted from the concentration in another media using sorption coefficients.

$$K_d = \frac{C_{sed}}{C_{pw\text{-}fd}} = K_{OC} f_{OC} \qquad \text{(Equation 1)}$$

where,

K_d is the sediment - water distribution coefficient,
C_{sed} is the sorbed NOC concentration in sediment,
$C_{pw\text{-}fd}$ is the freely dissolved NOC concentration in pore water,
K_{OC} is the organic carbon (OC) – water normalized distribution coefficient, and
f_{OC} is the fraction OC in sediment.

Equilibrium partitioning sediment guidelines (ESGs) estimate an NOC concentration in water, below which effects are not expected to occur, NOC concentrations in sediment are then expressed in terms of the principle binding phase (*e.g.*, total organic carbon for NOCs and acid volatile sulfides for metals) and compared to the ESG to determine whether effects are likely to occur (Budzinski *et al.*, 1997; USEPA, 2000).

In order to evaluate whether toxicity in a particular sediment is likely to occur, a freely dissolved NOC concentration in pore water may be estimated from total NOC concentrations in sediments. That estimated NOC concentration in pore-water is compared to the water column toxicity endpoint (which may be corrected for dissolved organic carbon) or freely dissolved NOC concentration in pore water toxicity endpoint from a sediment toxicity study. Alternatively, a NOC concentration in bulk sediment on a dry weight basis, normalized to the fraction organic carbon may be compared to the toxicity endpoint from a sediment toxicity test expressed in the same manner. **Table B-1** summarizes the possible exposure estimates and toxicity endpoints that may be used in order to evaluate whether there is a

potential for risk to occur in soils and sediments. The main assumption in the equilibrium partitioning model is that the dominant sorbent is organic carbon, thus, expression of toxicity on a pore water basis or on a basis of the fraction of organic carbon in sediment will reduce the variability in toxicity endpoints between soils and sediments. A water column toxicity test and the assumption that the pore water is the only route of exposure neglect the potential for exposure through ingestion. Organisms do ingest detritus and organic materials in sediment toxicity tests, so when an endpoint from a sediment toxicity test is used and compared to a pesticide concentration in bulk sediment expressed on an OC normalized basis, the potential for ingestion is not neglected in the risk assessment.

Table B-1. Summary of exposure estimates and the possible toxicity endpoints that may be compared to evaluate the potential for risk in soils and sediments.

1. **Exposure Estimates**	2. **Toxicity Endpoints**	3. **Assumptions**	4. **Limitations**
Dissolved NOC concentration in pore water	Measured or Estimated NOC concentration in pore water from a sediment toxicity test	Dissolved concentration is a good estimate of exposure. Organic carbon is the dominant sorbent.	Neglects the potential for exposure through the diet. Sorption has been shown to be influenced by many factors other than organic carbon.
	NOC concentration in water from a water column toxicity test	Dissolved concentration is good estimate of exposure. Sensitivity of water column aquatic invertebrates are representative of benthic aquatic invertebrates	
NOC concentration in sediment on a dry weight basis, normalized to the fraction organic carbon	NOC concentration in sediment on a dry weight basis, normalized to organic carbon	Organic carbon is the dominant sorbent for NOCs.	Sorption has been shown to be influenced by many factors other than organic carbon.

B. Total vs. freely dissolved concentrations in pore water

Total chemical concentrations in pore water will overestimate the dissolved chemical concentration in pore water, especially for chemicals with a high K_{OW} or K_{OC}. The fraction of NOC that is freely dissolved in the water column can be calculated using the following equation:

$$f_{fd} = \frac{1}{(1 + [DOC]K_{DOC} + [POC]K_{POC})} \qquad \text{(equation 2)}$$

where,

f_{fd} is the fraction NOC freely dissolved,

[POC] is the concentration of particulate organic carbon in kg POC/L water,

[DOC] is the concentration of dissolved organic carbon in kg DOC/L water, and
K_{DOC} is the dissolved organic-carbon water distribution coefficient in L water/kg DOC, and the
K_{POC} is the particulate organic-carbon water distribution coefficient in L water/kg POC.

For highly soluble chemicals, the difference in the dissolved versus the total concentration will be minor. **Figure B-1** shows the fraction freely dissolved over a range of log K_{OW}. The graph was created using equation 2 and assuming a DOC concentration of 0.1, 1.0, and 10 mg/L, that no particulate organic carbon was present, and the following relationship between the K_{DOC} and *n*-octanol-water partition coefficient (K_{OW}) (Burkhard, 2000).

$$K_{DOC} = 0.08\, K_{OW} \qquad \text{(equation 3)}$$

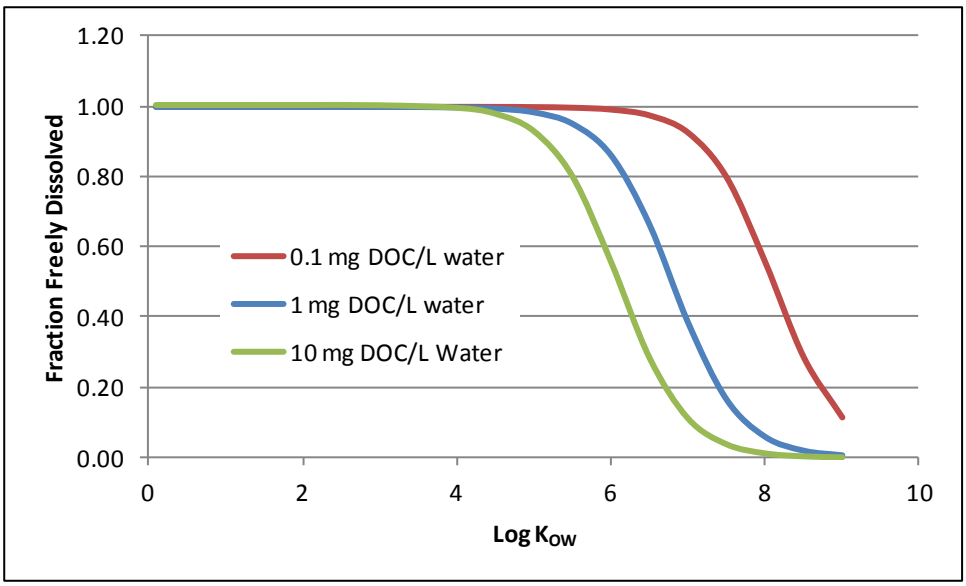

Figure B-1. Fraction of freely dissolved chemical as a function of the log K_{OW}

These results show that for chemicals with a log K_{OW} less than four, the fraction freely dissolved will range from 0.9 to 1.0 the total chemical concentration for DOC concentrations up to 100 mg DOC/L water. For chemicals with a log K_{OW} greater than four, the fraction freely dissolved can be much less than the total concentration in water or pore water. At 10 mg/L, the freely dissolved concentration remains above 0.90 for compounds with a log K_{OW} up to five and drops down to 55 percent for a log K_{OW} of six. For chemicals with a log K_{OW} less than four, it is typically feasible to reliably measure the chemical concentration in pore water as the DOC left in pore water will not significantly alter the bioavailability of the compound.

C. Estimating freely dissolved pore water concentration for sediment toxicity tests for chemicals with a log K_{OW} greater than four.

For chemicals with a log K_{OW} greater than four, it may not be possible to directly measure the concentration in pore water and if pore water concentrations are measured, some correction of the pore water concentration may be needed because the concentration of DOC in pore water can be high and the bioavailable fraction can be much lower than the total concentration. There are a few different methods that may be used in this situation. The first is to estimate the chemical concentration in pore water using equation four:

$$C_{pw\text{-}fd} = \frac{C_{sed\text{-}dw}}{K_{OC}\, f_{OC}} \qquad \text{(equation 4)}$$

where,

$C_{pw\text{-}fd}$ is the freely dissolved chemical concentration in pore water in µg/L,
$C_{sed\text{-}dw}$ is the chemical concentration in sediment on a dry weight basis in µg chemical/kg-sediment dry weight,
K_{OC} is the organic-carbon normalized sediment-water distribution coefficient in L/kg-organic carbon, and
f_{OC} is the fraction organic carbon in sediment.

Ideally, the K_{OC} used in the equation would be measured in the sediment that the toxicity test is conducted in. Additionally, the range of equilibrium chemical concentrations in pore water that the K_{OC} was measured in should overlap with the range of chemical concentrations used for toxicity testing. When these data are not available for the specific test, a K_{OC} may be estimated using submitted fate data. Sorption coefficient data are typically submitted on four soils and one sediment. While sediment K_{OC} values tend to be higher than soil K_{OC} values (Allen-King *et al.*, 2002), data are only available for a few soils and sediments. Therefore, selection of the K_{OC} value(s) for use in this equation should be based on those considered the most representative of chemical partitioning in test sediments.

Another option is to estimate the dissolved concentration using equation five:

$$C_{pw\text{-}fd} = \frac{C_{pw\text{-}tot}}{1+[DOC]K_{DOC}} \qquad \text{(equation 5)}$$

where,

C_{pw-tot} is the total chemical concentration measured in pore water,
[DOC] is the concentration of dissolved organic carbon (DOC) in the measured water, and
K_{DOC} is the DOC-water partition coefficient.

For this equation the K_{DOC} may be estimated using equation three. There may be other methods of estimating K_{DOC} that are more appropriate for the chemical of interest. Teams are encouraged to use the most reliable K_{DOC} available for the chemical of interest.

D. Considerations for NOC concentrations in bulk sediment normalized to the fraction organic carbon

The sediment concentrations measured in toxicity tests are the total NOC concentration in sediment. The concentration should be expressed on a dry weight basis and normalized to the fraction organic carbon in the sediment.

4. Limitations of the Equilibrium Partitioning Approach

A large body of data has been collected that supports the equilibrium partitioning model (DiToro *et al.*, 1991b; Ferraro *et al.*, 1990; Tracey and Hansen, 1996). However, over the past two decades several findings have suggested that this model is not adequate to predict the toxicity of sediment. Measured K_d values are often much greater than that predicted by organic matter alone (Bucheli and Gustafsson, 2000, 2001; Fletcher *et al.*, 1994; Gustafsson and Gschwend, 1999a; Gustafsson and Gschwend, 1997; Gustafsson and Gschwend, 1999b; Kraaij *et al.*, 2002; Mcgroddy *et al.*, 1996; Muller *et al.*, 2000) and uptake by organisms exposed to the same total NOC concentration in sediment is highly variable, even when normalized to f_{OC} and f_{lipid}. The presence of nonlinear sorption isotherms (Chiou *et al.*, 1998; Huang *et al.*, 1997; Karapanagioti *et al.*, 2000; Kleineidam *et al.*, 1999; Xia and Ball, 1999), fast and slow sorption domains (Pignatello and Xing, 1996; Shor *et al.*, 2003), competition (Zhao *et al.*, 2002), and a decreasing desorption and extractability with time (Alexander, 1995) indicate that a simple linear partitioning model is not adequate for modeling sorption in complex systems containing heterogeneous organic matter with varying sorptive properties. Finally, others have shown that the fast desorbing fraction is a good predictor of bioavailability and diet should also be considered as an exposure pathway (Gaskell *et al.*, 2007; Sormunen *et al.*, 2008). While it is acknowledged that many factors influence bioavailability of NOCs and there is much variability in measured K_{OC}s, for prospective risk assessments the equilibrium partitioning model is the best model available that reliably reduces the variation in estimated exposure across soils and sediments for organic compounds. For site specific and retrospective risk assessments, consideration of site specific parameters and sorption may be more appropriate and/or necessary.

A. Organic Carbon is the Dominant Sorbent for Nonionic Organic Chemicals

The paradigm that organic materials are the dominant sorbent for organic chemicals in soils and sediments gained wide acceptance in the 1990s and is still a widely accepted paradigm (Pignatello, 2011). However, it is important to understand that organic materials are not the only sorbents important in understanding sorption of NOCs. The simplest paradigm is that NOCs primarily sorb to amorphous organic materials via absorption which is sometimes called partitioning (*e.g.*, sorption into a 3-dimensional matrix) in the same way compounds partition into water and organic solvents (Cornelissen *et al.*, 2005). This type of sorption is linear, rapid, is not constrained by a limited number of sorption sites, and does not exhibit competition of solutes for sorption sites. However, it is known that nonlinear sorption (adsorption) isotherms are commonly observed. Nonlinear sorption or adsorption is viewed as sorption onto a two dimensional surface where the solute condenses onto the surface. In

adsorption, a nonlinear isotherm is observed due to the nature of the sorbent changing with loading, due to a limited surface area for sorption, or due to a heterogeneous sorbent. For adsorption, competition between solutes for sorption sites and saturation of sorption sites may occur. The variation in sorption coefficients across concentrations may be as high as three orders of magnitude and thus the nonlinearity of the sorption isotherm can have a profound effect on bioavailability (Pignatello, 2011). One theory on the source of nonlinear sorption is the presence of high surface area carbon materials (*e.g.*, black carbon, soot carbon, *etc.*) which have a very high surface area and high sorption coefficients (10 to 100 times the values observed for amorphous organic matter) (Cornelissen *et al.*, 2005).

While the dominant paradigm has been that organic materials account for the majority of sorption in soils and sediments, research has also shown that sorption to clay materials can be substantial. It has been demonstrated that, "for several classes of important NOCs and pesticides, smectite clays are equally or more effective adsorbents than SOM (compared as isolated components)" (Boyd *et al.*, 2011). Sorption coefficients for an individual compound will vary widely for different types of organic materials and for different types of clays (Allen-King *et al.*, 2002; Tracey and Hansen, 1996). Methods have been developed to estimate sorption in systems with clay and organic materials using a mineral phase availability factor. However, these models are too complex for use with the limited data sets available for most pesticides and are specific to an individual soil or sediment system.

The many factors affecting sorption and the quality and amount of information available for most pesticides is not adequate to fully determine the drivers of sorption of many pesticides. In one system, both absorption and adsorption will be occurring, and adsorption may be to hard carbon materials or clays. While sorption to clays can be important for some compounds and in some systems, sorption to clays in a different soil may not be dominant for that same compound in a different soil system. The limited sorption data available for pesticides does not allow for a sufficient analysis to consider sorption in this type of detail. For most pesticides, data are only available on four soils and one sediment and sorption coefficients tend to be higher in sediment versus soil. The properties of those soils and sediments are not held constant with varying one type of clay or type of organic carbon across soils and sediments. Data on sorption for relatively pure black carbon or clay materials may not be environmentally relevant as organic materials and biofilms can block surfaces and pores, resulting in less than additive sorption. Additionally, aggregation and composite particles may occur. Finally, organic materials can change the swelling and shrinking of clay materials and block access to interlayers. Sorption coefficients measured on pure materials may not be used to predict sorption in complex systems. Measurement of organic carbon may be indirectly determined (using the Walkley-Black method of oxidation with $K_2Cr_2O_7$ followed by titration of excess dichromate with $FeSO_4$) rather than the preferred method of removal of inorganic carbon by acid digestion, combustion of dry sediment, followed by infra-red determination of CO_2 using a CHN analyzer (USEPA, 1999). Methods of identifying specific types of carbon require additional analyses. Available data are not sufficient to identify the types of clay or carbon in the various systems tested. The high solids to water ratio may not be appropriate for characterization sorption of compounds with a high sorption coefficient (USEPA, 1999). Finally, reliable methods of predicting sorption across types of clays are not available. Therefore, given the body of evidence supporting the importance of organic materials on sorption of NOC, it is not

possible to conclude that organic carbon does not at least play a role in sorption. This issue was addressed in a 1999 Scientific Advisory Panel examining Sediment Toxicity and Fate of Synthetic Pyrethroids and they concluded the following on page eight of the final report.

"*Kd values are obtained under a given set of conditions for a given soil type. The use of Kd in place of K_{OC} limits the Agency to the use of a value which is operationally defined and which cannot be extrapolated beyond the experiment that generated the value. The advantage of using OC as a normalizing basis is that it allows one to estimate partitioning across a wide variety of soil/sediment types. This approach is central to the risk assessment of non-ionic chemicals sorbed to sediments*."

Normalization of total sediment concentrations to OC should be performed for all sediment toxicity tests for NOC compounds.

Abbreviations and Nomenclature

C_{sed}	Sorbed NOC concentration in sediment
$C_{sed\text{-}dw}$	NOC concentration in sediment on a dry weight basis
$C_{sed\text{-}toc}$	NOC concentration in sediment on a dry weight basis normalized to the fraction organic carbon
$C_{pw\text{-}fd}$	Freely dissolved NOC concentration in pore water
$C_{pw\text{-}tot}$	Total NOC concentration in pore water (e.g., included NOC in DOC and in water)
DOC	Dissolved organic carbon
[DOC]	Concentration of dissolved organic carbon
dw	Dry weight
EEC	Estimated environmental concentration
EFED	Environmental Fate and Effects Division
ESG	Equilibrium partitioning sediment guidelines
EXAMS	Exposure Analysis Modeling System
f_{fd}	Fraction freely dissolved
f_{OC}	Fraction organic carbon
K_{DOC}	Dissolved organic carbon-water partition coefficient
K_{OC}	Organic-carbon water normalized sediment or soil water distribution coefficient
K_{OW}	n-octanol-water partition coefficient
K_{POC}	Particulate organic carbon-water partition coefficient
L	liter
mg	milligram
NOC	Nonionic organic chemical
OC	Organic carbon
OCSPP	Office of Chemical Safety and Pollution Prevention
POC	Particulate organic carbon
[POC]	Concentration of particulate organic carbon
PRZM	Pesticide root zone model

Literature Cited

Accardi-Dey, A., & Gschwend, P. M. 2002. Assessing the combined roles of natural organic matter and black carbon as sorbents in sediments. *Environ Sci Technol, 36*, 21-29.

Alexander, M. 1995. How toxic are toxic chemicals in soil? *Environ Sci Technol, 29*, 2713-2717.

Allen-King, R. M., Grathwohl, P., & Ball, W. P. 2002. New modeling paradigms for the sorption of hydrophobic organic chemicals to heterogenous carbonaceous matter in soils, sediments, and rocks. *Advances in Water Resources, 25*, 985-1016.

Boyd, S. A., Johnston, C. T., Laird, D. A., Teppen, B. J., & Li, H. Chapter 2. Comprehensive Study of Organic Contaminant Adsorption by Clays: Methodologies, Mechanisms, and Environmental Implications. In B. Xing, N. Senesi & P. M. Huang (Eds.), *Biophysico-Chemical Processes of Anthropogenic Organic Compounds in Environmental Systems*. New Jersey: John Wiley & Sons Inc.

Boyd, S. A., Johnston, C. T., Laird, D. A., Teppen, B. J., & Li, H. 2011. Chapter 2. Comprehensive Study of Organic Contaminant Adsorption by Clays: Methodologies, Mechanisms, and Environmental Implications. In B. Xing, N. Senesi & P. M. Huang (Eds.), *Biophysico-Chemical Processes of Anthropogenic Organic Compounds in Environmental Systems*. New Jersey: John Wiley & Sons Inc.

Bucheli, T. D., & Gustafsson, O. 2000. Quantification of the soot-water distribution coefficient of PAHs provides mechanistic bases for enhanced sorption observations. *Environ Sci Technol, 34*, 5144-5151.

Bucheli, T. D., & Gustafsson, O. 2001. Ubiquitous observations of enhanced solid affinities for aromatic organochlorines in field situations: Are in situ dissolved exposures overestimated by existing partitioning models? *Environ Toxicol Chem, 20*(7), 1450-1456.

Budzinski, H., Jones, I., Bellocq, J., Pierard, C., & Garrigues, P. 1997. *Mar Chem, 58*, 85-97.

Burkhard, L. P. 2000. Estimating dissolved organic carbon parition coefficients for nonionic organic chemicals. *Environmental Science and Technology, 22*, 4663-4668.

Burkhard, L. P. 2011. Critical Review: Estimating Dissolved Organic Carbon Partition Coefficients for Nonionice Organic Chemicals. *Environmental Science and Technology, 34*(22), 4663-4668.

Chiou, C. T., McGroddy, S. E., & Kile, D. E. 1998. Partition characteristics of polycyclic aromatic hydrocarbons on soils and sediments. *Environ Sci Technol, 32*, 264-269.

Cornelissen, G., Gustafsson, O., Bucheli, T. D., Jonker, M. T. O., Koelmans, A. A., & VanNoort, P. C. 2005. Critical Review: Extensive sorption of organic compounds to black carbon, coal, and kerogen in sediments and soils: Mechanisms and consequences for distribution, bioaccumulation, and biodegradation. *Environmental Science and Technology, 39*(18), 6881-6895.

DiToro, D. M., Zarba, C. S., Hansen, D. J., Berry, W. J., Schwartz, R. C., Cowan, C. E., et al. 1991a. Technical basis for establishing sediment quality criteria for non-ionic organic chemicals using equilibrium partitioning. *Environ Toxicol Chem, 10*, 1541-1586.

DiToro, D. M., Zarba, C. S., Hansen, D. J., Berry, W. J., Schwartz, R. C., Cowan, C. E., et al. 1991b. Technical basis for establishing sediment quality criteria for nonionic organic chemicals using equilibrium partitioning. *Environmental Toxicology and Chemistry, 10*, 1541-1586.

Ferraro, S. P., II, H. L., Ozretich, R. J., & Specht, D. T. 1990. Predicting bioaccumulation potential: a test of a fugacity-based model. *Arch Environ Contam Toxicol, 19*, 386-394.

Fieldler, S., Holl, B. S., Freibauer, A., Stahr, K., Drosler, M., Schloter, M., et al. 2008. Particulate organic carbon (POC) in relation to other pore water carbon fractions in drained and rewetted fens in Southern Germany. *Biogeosciences, 5*, 1615-1623.

Fletcher, J. S., Nellessen, J. E., & Pfleeger, T. G. 1994. Literature-Review and Evaluation of the Epa Food-Chain (Kenaga) Nomogram, an Instrument for Estimating Pesticide-Residues on Plants. *Environmental Toxicology and Chemistry, 13*(9), 1383-1391.

Gaskell, P. N., Brooks, A. C., & Maltby, L. 2007. Variation in the Bioaccumulation of a Sediment-Sorbed Hydrophobic Compound by Benthic Macroinvertebrates: Patterns and Mechanisms. *Environmental Science and Technology, 41*, 1783-1789.

Gustafsson, O., & Gschwend, O. M. 1999a. Aquatic phase-distributions of hydrophobic chemicals not predictable from organic matter partitioning models. In P. Baveye, J. C. Block & V. BGoncharuk (Eds.), *Bioavailability of Organic Xenobiotics in the Environment* (pp. 327-348). Amsterdam, The Netherlands: Kluwer Scientific.

Gustafsson, O., & Gschwend, P. M. 1997. Soot as a strong partition medium for polycyclic aromatic hydrocarbons in aquatic systems. In R. P. Eganhouse (Ed.), *Molecular Markers in Environmental Geochemistry* (pp. 365-381). Washington DC: American Chemical Society.

Gustafsson, O., & Gschwend, P. M. 1999b. Phase distributions of hydrophobic chemicals in the aquatic environment. In J. C. Block, P. Baveye & V. V. Goncharuk (Eds.), *Bioavailability of Organic Xenobiotics in the Environment: Practical Consequences for the Environment* (pp. 327-348). Boston, MA: Kluwer Academic Publishers.

Huang, W., Young, T. M., Schlautman, M. A., Hong, Y., & Weber, W. J. 1997. A distributed reactivity model for sorption by soils and sediments. 9. General isotherm nonlinearity and applicability of the dual reactive domain model. *Environ Sci Technol, 31*, 1703-1710.

Karapanagioti, H. K., Kleineidam, S., Sabatini, D. A., Grathwohl, P., & Ligouis, B. 2000. Impacts of heterogenous organic matter on phenanthrene sorption: equilibrium and kinetic studies with aquifer material. *Environ Sci Technol, 34*, 406-414.

Karickhoff, S. H. 1984. Organic pollutant sorption in aquatic systems. *Journal of Hydraulic Engineering, 110*(6), 707-735.

Kleineidam, S., Rugner, H., Ligouis, B., & Grathwohl, P. 1999. Organic matter facies and equilibrium sorption of phenanthrene. *Environ Sci Technol, 33*, 1637-1644.

Kraaij, R., Seinen, W., Tolls, J., Cornelissen, G., & Belfroid, A. C. 2002. Direct evidence of sequestration in sediments affecting the bioavailability of hydrophobic organic chemicals to benthic deposit-feeders. *Environ Sci Technol, 36*, 3525-3529.

Maruya, K. A., Risebrough, R. W., & Horne, A. J. 1996. Partitioning of polynuclear aromatic hydrocarbons between sediments from San Francisco Bay and their porewaters. *Environ Sci Technol, 30*, 2942-2947.

Mcgroddy, S. E., & Farrington, J. W. 1995. Sediment porewater partitioning of polycyclic aromatic hydrocarbons in three cores from Boston Harbor, Massachusetts. *Environ Sci Technol, 29*, 1542-1550.

Mcgroddy, S. E., Farrington, J. W., & Gschwend, P. M. 1996. Comparison of the in situ and desorption sediment-water partitioning of polycyclic aromatic hydrocarbons and polychlorinated biphenyls. *Environ Sci Technol, 30*, 172-177.

Muller, S., Wilcke, W., Kanchanakool, N., & Zech, W. 2000. Polycyclic aromatic hydrocarbons (PAHs) and polychlorinated biphenyls (PCBs) in particle-size separates of urban soils in Bangkok, Thailand. *Soil Sci, 165*(5), 412-419.

Pignatello, J. J. 2011. Interactions of anthropogenic organic chemicals with natural organic matter and black carbon in environmental particles. In B. Xing, N. Senesi & P. M. Huang (Eds.), *Biophysico-chemical Processes of Anthropogenic Organic Compounds in Environmental Systems* (pp. 3-50). Singapore: John Wiley & Sons, Inc.

Pignatello, J. J., & Xing, B. 1996. Mechanisms of slow sorption of organic chemicals to natural particles. *Environ Sci Technol, 30*, 1-11.

Ronday, R., Van Kammen-Polman, A. M. M., Dekker, A., Houx, N. W. H., & Leistra, M. 1997. Persistence and toxicological effects of pesticides in topsoil: Use of the equilibrium partitioning theory. *Environ Toxicol Chem, 16*, 601-607.

Shor, L. M., Rockne, K. J., Taghon, G. L., Young, L. Y., & Kosson, D. S. 2003. Desorption kinetics for field-aged polycyclic aromatic hydrocarbons from sediments. *Environ Sci Technol, 37*, 1535-1544.

Sormunen, A. J., Leppanen, M. T., & Kukkonen, J. V. K. 2008. Influence of sediment ingestion and exposure concentration on the bioavailable fraction of sediment-associated tetrachlorobiphenyl in oligochaetes. *Environmental Toxicology and Chemistry, 27*(4), 854-863.

Tracey, G. A., & Hansen, D. J. 1996. Use of biota-sediment accumulation factors to assess similarity of nonionic organic chemical exposure to benthically-coupled organisms of differing trophic mode. *Arch Environ Contam Toxicol, 30*, 467-475.

USEPA. 1999. *FIFRA Scientific Advisory Panel Meeting, February 23, 1999 held ad the Holiday Inn Hotel, Arlington, Virginia.* S. R. N. 99-03A. March 25, 1999. Office of Pesticide Programs. Available at http://www.epa.gov/scipoly/sap/meetings/1999/022399_mtg.htm#materials (Accessed June 26, 2009).

USEPA. 2000. *Methods for Measuring the Toxicity and Bioaccumulation of Sediment-associated Contaminants with Freshwater Invertebrates. Second Edition.* E. 600/R-99/064. March 2000. Office of Research and Development. Office of Science and Technology. Office of Water. United States Environmental Protection Agency. Available at http://www.epa.gov/waterscience/cs/library/freshmanual.pdf (Accessed October 29, 2009).

USEPA. 2004. *A Discussion with the FIFRA Scientific Advisory Panel Regarding the Terrestrial and Aquatic Level II Refined Risk Assessment Models (Version 2.0). Support Document for Scientific Advisory Panel Meeting Scheduled from March 30 - April 2, 2004.* March 4, 2004. Environmental Fate and Effects Division. Office of Pesticide Programs. United States Environmental Protection Agency. Available at http://www.epa.gov/scipoly/sap/meetings/2004/033004_mtg.htm (Accessed December 15, 2011)

White, K. 2005. Thesis: *Bioavailability of Polycyclic Aromatic Hydrocarbons in the Aquatic Environment.* North Carolina State University, Raleigh, NC.

Xia, G., & Ball, W. P. 1999. Adsorption-partitioning uptake of nine low polarity organic chemicals on a natural sorbent. *Environ Sci Technol, 33*, 262-269.

Zhao, C., Hunter, M., Pignatello, J. J., & White, J. C. 2002. Application of the dual-mode model for predicting competitive sorption equilibria and rates of polycyclic aromatic hydrocarbons in estuarine sediment suspensions. *Environ Toxicol Chem, 21*(11), 2276-2282.

EXHIBIT 45

Adopted :
13 April 2004

OECD GUIDELINES FOR THE TESTING OF CHEMICALS

Sediment-Water Chironomid Toxicity Test Using Spiked Water

INTRODUCTION

1. This Test Guideline is designed to assess the effects of prolonged exposure of chemicals to the sediment-dwelling larvae of the freshwater dipteran *Chironomus* sp. It is mainly based on the BBA guideline using a sediment-water test system with artificial soil, and water column exposure scenario (1). It also takes into account existing toxicity test protocols for *Chironomus riparius* and *Chironomus tentans* which have been developed in Europe and North America (2)(3)(4)(5)(6)(7)(8) and ring-tested (1)(6)(9). Other well documented chironomid species may also be used, for example *Chironomus yoshimatsui* (10)(11).

2. The exposure scenario used in this guideline is water spiking. The selection of the appropriate exposure scenario depends on the intended application of the test. The water exposure scenario, involving spiking of the water column, is intended to simulate a pesticide spray drift event and covers the initial peak of concentrations in pore water. It is also useful for other types of exposure (including chemical spills) except accumulation processes lasting longer than the test period.

3. Substances that need to be tested towards sediment-dwelling organisms usually persist in this compartment over long time periods. The sediment-dwelling organisms may be exposed via a number of routes. The relative importance of each exposure route, and the time taken for each to contribute to the overall toxic effects, is dependent on the physical-chemical properties of the chemical concerned. For strongly adsorbing substances (e.g. with log K_{ow} > 5) or for substances covalently binding to sediment, ingestion of contaminated food may be a significant exposure route. In order not to underestimate the toxicity of highly lipophilic substances, the use of food added to the sediment before application of the test substance may be considered. In order to take all potential routes of exposure into account the focus of this Guideline is on long-term exposure. The test duration is in the range of 20 - 28 days for *C. riparius* and *C. yoshimatsui*, and 28 - 65 days for *C. tentans*. If short-term data are required for a specific purpose, for example to investigate the effects of unstable chemical, additional replicates may be removed after a ten-day period.

4. The measured endpoints are the total number of adults emerged and the time to emergence. It is recommended that measurements of larval survival and growth should only be made after a ten-day period if additional short-term data are required, using additional replicates as appropriate.

5. The use of formulated sediment is recommended. Formulated sediment has several advantages over natural sediments:

- the experimental variability is reduced because it forms a reproducible "standardised matrix" and the need to find uncontaminated and clean sediment sources is eliminated;
- the tests can be initiated at any time without encountering seasonal variability in the test sediment and there is no need to pre-treat the sediment to remove indigenous fauna; the use of formulated sediment also reduces the cost associated with the field collection of sufficient amounts of sediment for routine testing;

- the use of formulated sediment allows for comparisons of toxicity and ranking substances accordingly: toxicity data from tests with natural and artificial sediments were comparable for several chemicals (2).

6. Definitions used are given in Annex 1.

PRINCIPLE OF THE TEST

7. First instar chironomid larvae are exposed to a concentration range of the test chemical in sediment-water systems. The test starts by placing first instar larvae into the test beakers containing the sediment-water system and subsequently spiking the test substance into the water. Chironomid emergence and development rate is measured at the end of the test. Larval survival and weight may also be measured after 10 days if required (using additional replicates as appropriate). These data are analysed either by using a regression model in order to estimate the concentration that would cause x % reduction in emergence, larvae survival or growth (e.g. EC_{15}, EC_{50}, etc.), or by using statistical hypothesis testing to determine a NOEC/LOEC. The latter requires comparison of effect values with control values using statistical tests.

INFORMATION ON THE TEST SUBSTANCE

8. The water solubility of the test substance, its vapour pressure, measured or calculated partitioning into sediment and stability in water and sediment should be known. A reliable analytical method for the quantification of the test substance in overlying water, pore water and sediment with known and reported accuracy and limit of detection should be available. Useful information includes the structural formula and purity of the test substance. Chemical fate of the test substance (e.g. dissipation, abiotic and biotic degradation, etc.) also is useful information. Further guidance for testing substances with physical-chemical properties that make them difficult to perform the test is provided in (12).

REFERENCE SUBSTANCES

9. Reference substances may be tested periodically as a means of assuring that the test protocol and test conditions are reliable. Examples of reference toxicants used successfully in ring-tests and validation studies are: lindane, trifluralin, pentachlorophenol, cadmium chloride and potassium chloride. (1)(2)(5)(6)(13).

VALIDITY OF THE TEST

10. For the test to be valid the following conditions apply:
- the emergence in the controls must be at least 70% at the end of the test. (1)(6);
- *C. riparius* and *C. yoshimatsui* emergence to adults from control vessels should occur between 12 and 23 days after their insertion into the vessels; for *C. tentans*, a period of 20 to 65 days is necessary.
- at the end of the test, pH and the dissolved oxygen concentration should be measured in each vessel. The oxygen concentration should be at least 60 per cent of the air saturation value (ASV) at the temperature used, and the pH of overlying water should be in the 6-9 range in all test vessels;

- the water temperature should not differ by more than ± 1.0 °C. The water temperature could be controlled by isothermal room and in that case the room temperature should be confirmed in an appropriate time intervals.

DESCRIPTION OF THE METHOD

Test vessels

11. The study is conducted in glass 600 ml beakers measuring 8 cm in diameter. Other vessels are suitable, but they should guarantee a suitable depth of overlying water and sediment. The sediment surface should be sufficient enough to provide 2 to 3 cm^2 per larvae. The ratio of the depth of the sediment layer to the depth of the overlying water should be 1:4. Test vessels and other apparatus that will come into contact with the test system should be made entirely of glass or other chemically inert material (e.g. Teflon).

Selection of species

12. The species to be used in the test is preferably *Chironomus riparius*. *Chironomus tentans* is also suitable but more difficult to handle and requires a longer test period. *Chironomus yohimatsui* may also be used. Details of culture methods are given in Annex 2 for *Chironomus riparius*. Information on culture conditions is also available for other species, i.e. *Chironomus tentans* (4) and *Chironomus yoshimatsui* (11). Identification of species must be confirmed before testing but is not required prior to every test if organisms come from an in-house culture.

Sediment

13. Formulated sediment (also called reconstituted, artificial or synthetic sediment) should preferably be used. However, if natural sediment is used, it should be characterised (at least pH, organic carbon content, determination of other parameters such as C/N ratio and granulometry are also recommended), and it should be free from any contamination and other organisms that might compete with, or consume the chironomids. It is also recommended that, before it is used in a chironomid toxicity test, the natural sediment be conditioned for seven days under the same conditions which prevail in the subsequent test. The following formulated sediment, based on the artificial soil used in Guideline 207 (14), is recommended for use in this test (1)(15)(16):

(a) 4-5 % (dry weight) peat: as close to pH 5.5 to 6.0 as possible; it is important to use peat in powder form, finely ground (particle size ≤ 1 mm) and only air dried.
(b) 20 % (dry weight) kaolin clay (kaolinite content preferably above 30 %).
(c) 75-76 % (dry weight) quartz sand (fine sand should predominate with more than 50 per cent of the particles between 50 and 200 μm).
(d) Deionised water is added to obtain moisture of the final mixture in a range of 30–50 %.
(e) Calcium carbonate of chemically pure quality ($CaCO_3$) is added adjust the pH of the final mixture of the sediment to 7.0 ± 0.5.
(f) Organic carbon content of the final mixture should be 2 % (± 0.5 %) and is to be adjusted by the use of appropriate amounts of peat and sand, according to (a) and (c).

14. The source of peat, kaolin clay and sand should be known. The sediment components should be checked for the absence of chemical contamination (e.g. heavy metals, organochorine compounds, organophosphorous compounds, etc.). An example for the preparation of the formulated sediment is

described in Annex 3. Mixing of dry constituents is also acceptable if it is demonstrated that after addition of overlying water a separation of sediment constituents (e.g. floating of peat particles) does not occur, and that the peat or the sediment is sufficiently conditioned.

Water

15. Any water which conforms to the chemical characteristics of acceptable dilution water as listed in Annexes 2 and 4 is suitable as test water. Any suitable water, natural water (surface or ground water), reconstituted water (see Annex 2) or dechlorinated tap water are acceptable as culturing water and test water if chironomids will survive in it for the duration of the culturing and testing without showing signs of stress. At the start of the test, the pH of the test water should be between 6 and 9 and the total hardness not higher than 400 mg/l as $CaCO_3$. However, if there is an interaction suspected between hardness ions and the test substance, lower hardness water should be used (and thus, Elendt Medium M4 must not be used in this situation). The same type of water should be used throughout the whole study. The water quality characteristics listed in Annex 4 should be measured at least twice a year or when it is suspected that these characteristics may have changed significantly.

Stock solutions - Spiked water

16. Test concentrations are calculated on the basis of water column concentrations, i.e. the water overlying the sediment. Test solutions of the chosen concentrations are usually prepared by dilution of a stock solution. Stock solutions should preferably be prepared by dissolving the test substance in test medium. The use of solvents or dispersants may be required in some cases in order to produce a suitably concentrated stock solution. Examples of suitable solvents are acetone, ethanol, methanol, ethylene glycol monoethyl ether, ethylene glycol dimethyl ether, dimethylformamide and triethylene glycol. Dispersants which may be used are Cremophor RH40, Tween 80, methylcellulose 0.01% and HCO-40. The solubilising agent concentration in the final test medium should be minimal (i.e. $\leq$ 0.1 ml/l) and should be the same in all treatments. When a solubilising agent is used, it must have no significant effects on survival nor visible adverse effect on the chironomid larvae as revealed by a solvent-only control. However, every effort should be made to avoid the use of such materials.

TEST DESIGN

17. The test design relates to the selection of the number and spacing of the test concentrations, the number of vessels at each concentration and the number of larvae per vessel. Designs for EC point estimation, for estimation of NOEC, and for conducting a limit test are described. The analysis by regression is preferred to the hypothesis testing approach.

Design for analysis by regression

18. The effect concentration (e.g. EC_{15}, EC_{50}) and the concentration range, over which the effect of the test substance is of interest, should be spanned by the concentrations included in the test. Generally, the accuracy and especially validity, with which estimates of effect concentrations (EC_x) can be made, is improved when the effect concentration is within the range of concentrations tested. Extrapolation much below the the lowest positive concentration or above the highest concentration should be avoided. A preliminary range-finding test is helpful for selecting the range of concentrations to be used (see paragraph 27).

19. If the EC_x is to be estimated, at least five concentrations and three replicates for each concentration should be tested. In any case, it is advisable that sufficient test concentrations are used to allow a good model estimation. The factor between concentrations should not be greater than two (an exception could be made in cases when the dose response curve has a shallow slope). The number of replicates at each treatment can be reduced if the number of test concentrations with different responses aisincreased. Increasing the number of replicates or reducing the size of the test concentration intervals tends to lead to narrower confidence intervals for the test. Additional replicates are required if 10–day larval survival and growth are to be estimated.

Design for estimation of a NOEC/LOEC

20. If the LOEC/NOEC are to be estimated, five test concentrations with at least four replicates should be used and the factor between concentrations should not be greater than two. The number of replicates should be sufficient to ensure adequate statistical power to detect a 20 % difference from the control at the 5% level of significance (p = 0.05). With the development rate, an Analysis of Variance (ANOVA) is usually appropriate, such as Dunnett-test and Williams-test (17)(18)(19)(20). In the emergence ratio the Cochran-Armitage, Fisher's exact (with Bonferroni correction), or Mantel-Haentzal tests may be used.

Limit test

21. A limit test may be performed (one test concentration and control) if no effects were seen in the preliminary range-finding test. The purpose of the limit test is to indicate that the toxic value of the test substance is greater that the limit concentration tested. No suggestion for a recommended concentration can be made in this guideline; this is left to the regulators' judgement. Usually, at least six replicates for both the treatment and control are necessary. Adequate statistical power to detect a 20 % difference from the control at the 5 % level of significance (p = 0.05) should be demonstrated. With metric response (development rate and weight), the t-test is a suitable statistical method if data meet the requirements of this test (normality, homogeneous variances). The unequal-variance t-test or a non parametric test, such as the Wilcoxon-Mann-Whithey test may be used, if these requirements are not fulfilled. With the emergence ratio, the Fisher exact test is appropriate.

PROCEDURE

Conditions of exposure

Preparation of spiked water-sediment system

22. Appropriate amounts of formulated sediment (see paragraphs 13-14 and Annex 3) are added in the test vessels to form a layer of at least 1.5 cm. Water is added to a depth of 6 cm (see paragraph 15). The ratio of the depth of the sediment layer and the depth of the water should not exceed 1:4 and the sediment layer should not be deeper than 3 cm. The sediment-water system should be left under gentle aeration for seven days prior to addition of test organisms (see paragraph 14 and Annex 3). To avoid separation of sediment ingredients and re-suspension of fine material during addition of test water in the water column, the sediment can be covered with a plastic disc while water is poured onto it, and the disc is removed immediately afterwards. Other devices may also be appropriate.

23. The test vessels should be covered (e.g. by glass plates). If necessary, during the study the water levels will be topped to the original volume in order to compensate for water evaporation. This should be performed using distilled or deionised water to prevent build-up of salts.

Addition of test organisms

24. Four to five days before adding the test organisms to the test vessels, egg masses should be taken from the cultures and placed in small vessels in culture medium. Aged medium from the stock culture or freshly prepared medium may be used. If the latter is used, a small amount of food, for example green algae and/or a few droplets of filtrate from a finely ground suspension of flaked fish food should be added to the culture medium (see Annex 2). Only freshly laid egg masses should be used. Normally, the larvae begin to hatch a couple of days after the eggs are laid (2 to 3 days for *Chironomus riparius* at 20 °C and 1 to 4 days for *Chironomus tentans* at 23 °C and *Chironomus yoshimatui* at 25 °C) and larval growth occurs in four instars, each of 4-8 days duration. First instar larvae (2-3 or 1-4 days post hatching) should be used in the test. The instar of midges can possibly be checked using head capsule width (6).

25. Twenty first instar larvae are allocated randomly to each test vessel containing the spiked sediment and water, using a blunt pipette. Aeration of the water has to be stopped while adding the larvae to test vessels and remain so for another 24 hours after addition of larvae (see paragraphs 24 and 32). According to the test design used (see paragraphs 19 and 20), the number of larvae used per concentration is at least 60 for the EC point estimation and 80 for determination of NOEC.

26. Twenty-four hours after adding the larvae, the test substance is spiked into the overlying water column, and slight aeration is again supplied. Small volumes of test substance solutions are applied below the surface of the water using a pipette. The overlying water should then be mixed with care not to disturb the sediment.

Test concentrations

27. A range-finding test may be helpful to determine the range of concentrations for the definitive test. For this purpose a series of widely spaced concentrations of the test substance are used. In order to provide the same density of surface per chironomids, which is to be used for the definitive test, chironomids are exposed to each concentration of the test substance for a period which allows estimation of appropriate test concentrations, and no replicates are required.

28. The test concentrations for the definitive test are decided based on the result of the range-finding test. At least five concentrations should be used and selected as described in paragraphs 18 to 20.

Controls

29. Control vessels without any test chemical but including sediment should be included in the test with the appropriate number of replicates (see paragraphs 19-20). If a solvent has been used for application of test substance (see paragraph 16), a sediment solvent control should be added.

Test system

30. Static systems are used. Semi-static or flow-through systems with intermittent or continuous renewal of overlying water might be used in exceptional cases as for instance if water quality specifications become inappropriate for the test organism or affect chemical equilibrium (e.g. dissolved oxygen levels fall too low, the concentration of excretory products rises too high or minerals leach from sediment and affect pH and/or water hardness). However, other methods for ameliorating the quality of overlying water, such as aeration, will normally suffice and be preferable.

Food

31. It is necessary to feed the larvae, preferably daily or at least three times per week. Fish-food (a suspension in water or finely ground food, for example Tetra-Min or Tetra-Phyll; see details in Annex 2) in the amount of 0.25-0.5 mg (0.35-0.5 mg for *C. yoshimatui*) per larvae per day seems adequate for young larvae for the first 10 days. Slightly more food may be necessary for older larvae: 0.5- 1 mg per larvae per day should be sufficient for the rest of the test. The food ration should be reduced in all treatments and control if fungal growth is seen or if mortality is observed in controls. If fungal development cannot be stopped the test is to be repeated. When testing strongly adsorbing substances (e.g. with log K_{ow} > 5), or substances covalently binding to sediment, the amount of food necessary to ensure survival and natural growth of the organisms may be added to the formulated sediment before the stabilisation period. For this, plant material must be used instead of fish food, for example the addition of 0.5% (dry weight) finely ground leaves of stinging nettle (*Urtica dioeca*), mulberry (*Morus alba*), white clover (*Trifolium repens*), spinach (*Spinacia oleracea*) or of other plant material (*Cerophyl* or alpha-cellulose) may be used.

Incubation conditions

32. Gentle aeration of the overlying water in test vessels is supplied preferably 24 hours after addition of the larvae and is pursued throughout the test (care should be taken that dissolved oxygen concentration does not fall below 60 per cent of ASV). Aeration is provided through a glass Pasteur pipette fixed 2-3 cm above the sediment layer (i.e. one or few bubbles/sec). When testing volatile chemicals, consideration may be given not to aerate the sediment-water system.

33. The test is conducted at a constant temperature of 20°C (± 2°C). For *C. tentans* and *C. yoshimatui*, recommended temperatures are of 23°C and 25°C (± 2°C), respectively. A 16 hours photoperiod is used and the light intensity should be 500 to 1000 lux.

Exposure duration

34. The exposure commences with the addition of larvae to the spiked and control vessels. The maximum exposure duration is 28 days for *C. riparius* and *C. yoshimatsui*, and 65 days for *C. tentans*. If midges emerge earlier, the test can be terminated after a minimum of five days after emergence of the last adult in the control.

<u>Observations</u>

Emergence

35. The development time and the total number of fully emerged male and female midges are determined. Males are easily identified by their plumose antennae.

36. The test vessels should be observed at least three times per week to make visual assessment of any abnormal behaviour (e.g. leaving sediment, unusual swimming), compared with the control. During the period of expected emergence a daily count of emerged midges is necessary. The sex and number of fully emerged midges are recorded daily. After identification the midges are removed from the vessels. Any egg masses deposited prior to the termination of the test should be recorded and then removed to prevent re-introduction of larvae into the sediment. The number of visible pupae that have failed to emerge is also recorded. Guidance on measurement of emergence is provided in Annex 5.

Growth and survival

37. If data on 10-day larval survival and growth are to be provided, additional test vessels should be included at the start, so that they may be used subsequently. The sediment from these additional vessels is sieved using a 250 µm sieve to retain the larvae. Criteria for death are immobility or lack of reaction to a mechanical stimulus. Larvae not recovered should also be counted as dead (larvae which have died at beginning of the test may have been degraded by microbes). The (ash free) dry weight of the surviving larvae per test vessel is determined and the mean individual dry weight per vessel calculated.It is useful to determine which instar the surviving larvae belong to; for that measurement of the width of the head capsule of each individual can be used.

Analytical measurements

Concentration of the test substance

38. As a minimum, samples of the overlying water, the pore water and the sediment must be analysed at the start (preferably one hour after application of test substance) and at the end of the test, at the highest concentration and a lower one. These determinations of test substance concentration inform on the behaviour/partitioning of the tested chemical in the water-sediment system. Sampling of sediment at the start of the test may influence the test system (e.g. removing test larvae), thus additional test vessels should be used to perform analytical determinations at the start and during the test if appropriate (see paragraph 39). Measurements in sediment might not be necessary if the partitioning of the test substance between water and sediment has been clearly determined in a water/sediment study under comparable conditions (e.g. sediment to water ratio, type of application, organic carbon content of sediment).

39. When intermediate measurements are made (e.g. at day 7) and if the analysis needs large samples which cannot be taken from test vessels without influencing the test system, analytical determinations should be performed on samples from additional test vessels treated in the same way (including the presence of test organisms) but not used for biological observations.

40. Centrifugation at, for example, 10,000 g and 4°C for 30 min. is the recommended procedure to isolate interstitial water. However, if the test substance is demonstrated not to adsorb to filters, filtration may also be acceptable. In some cases it might not be possible to analyse concentrations in the pore water as the sample size is too small.

Physical-chemical parameters

41. The pH, dissolved oxygen in the test water and temperature of the test vessels should be measured in an appropriate manner (see paragraph 10). Hardness and ammonia should be measured in the controls and one test vessel at the highest concentration at the start and the end of the test.

DATA AND REPORTING

Treatment of results

42. The purpose of this test is to determine the effect of the test substance on the development rate and the total number of fully emerged male and female midges, or in the case of the 10-day test effects on survival and weight of the larvae. If there are no indications of statistically different sensitivities of sexes, male and female results may be pooled for statistical analyses. The sensitivity differences between sexes

can be statistically judged by, for example, a χ^2-r × 2 table test. Larval survival and mean individual dry weight per vessel must be determined after 10 days where required.

43. Effect concentrations expressed as concentrations in the overlaying water, are calculated preferably based on measured concentrations at the beginning of the test (see paragraph 38).

44. To compute a point estimate for the EC_{50} or any other EC_x, the per-vessel statistics may be used as true replicates. In calculating a confidence interval for any EC_x the variability among vessels should be taken into account, or it should be shown that this variability is so small that it can be ignored. When the model is fitted by Least Squares, a transformation should be applied to the per-vessel statistics in order to improve the homogeneity of variance. However, EC_x values should be calculated after the response is transformed back to the original value.

45. When the statistical analysis aims at determining the NOEC/LOEC by hypothesis testing, the variability among vessels needs to be taken into account, for example by a nested ANOVA. Alternatively, more robust tests (21) can be appropriate in situations where there are violations of the usual ANOVA assumptions.

Emergence ratio

46. Emergence ratios are quantal data, and can be analyzed by the Cochran-Armitage test applied in step-down manner where a monotonic dose-response is expected and these data are consistent with this expectation. If not, a Fisher's exact or Mantel-Haentzal test with Bonferroni-Holm adjusted p-values can be used. If there is evidence of greater variability between replicates within the same concentration than a binomial distribution would indicate (often referenced as "extra-binomial" variation), then a robust Cochran-Armitage or Fisher exact test such as proposed in (21), should be used.

The sum of midges emerged per vessel, n_e, is determined and divided by the number of larvae introduced, n_a:

$$ER = \frac{n_e}{n_a}$$

where:

ER	=	emergence ratio
n_e	=	number of midges emerged per vessel
n_a	=	number of larvae introduced per vessel

47. An alternative that is most appropriate for large sample sizes, when there is extra binomial variance, is to treat the emergence ratio as a continuous response and use procedures such as William's test when a monotonic dose-response is expected and is consistent with these ER data. Dunnett's test would be appropriate where monotonicity does not hold. A large sample size is defined here as the number emerged and the number not emerging both exceeding five, on a per replicate (vessel) basis.

48. To apply ANOVA methods values of ER should first be transformed by the arcsin-sqrt-transformation or Tukey-Freeman transformation to obtain an approximate normal distribution and to equalise variances. The Cochran-Armitage, Fisher's exact (Bonferroni), or Mantel-Haentzal tests can be applied when using the absolute frequencies. The arcsin-sqrt transformation is applied by taking the inverse sine ($sine^{-1}$) of the square root of ER.

49. For emergence ratios, EC_x-values are calculated using regression analysis (or e.g. probit (22), logit, Weibull, appropriate commercial software etc.). If regression analysis fails (e.g. when there are less than two partial responses), other non-parametric methods such as moving average or simple interpolation are used.

Development rate

50. The mean development time represents the mean time span between the introduction of larvae (day 0 of the test) and the emergence of the experimental cohort of midges. (For the calculation of the true development time, the age of larvae at the time of introduction should be considered). The development rate is the reciprocal of the development time (unit: 1/day) and represents that portion of larval development which takes place per day. The development rate is preferred for the evaluation of these sediment toxicity studies as its variance is lower, and it is more homogeneous and closer to normal distribution as compared to development time. Hence, powerful parametric test procedures may be used with development rate rather than with development time. For development rate as a continuous response, EC_x-values can be estimated by using regression analysis (e.g. (23)(24)).

51. For the following statistical tests, the number of midges observed on inspection day x are assumed to be emerged at the mean of the time interval between day x and day x–l (l = length of the inspection interval, usually 1 day). The mean development rate per vessel ($\bar{x}$) is calculated according to:

$$\bar{x} = \sum_{i=1}^{m} \frac{f_i x_i}{n_e}$$

where:

$\bar{x}$: mean development rate per vessel
i : index of inspection interval
m : maximum number of inspection intervals
f_i : number of midges emerged in the inspection interval i
n_e : total number of midges emerged at the end of experiment (= $\sum f_i$)
x_i : development rate of the midges emerged in interval i

$$x_i = 1 \Big/ \left(day_i - \frac{l_i}{2} \right)$$

where:

day_i : inspection day (days since application)
l_i : length of inspection interval i (days, usually 1 day)

<u>Test report</u>

52. The test report must at least provide the following information:

Test substance:

- physical nature and, where relevant, physical-chemical properties (water solubility, vapour pressure, partition coefficient in soil (or in sediment if available), stability in water, etc.);

- chemical identification data (common name, chemical name, structural formula, CAS number, etc.) including purity and analytical method for quantification of test substance.

Test species:

- test animals used: species, scientific name, source of organisms and breeding conditions;
- information on handling of egg masses and larvae;
- age of test animals when inserted into test vessels.

Test conditions:

- sediment used, i.e. natural or formulated sediment;
- for natural sediment, location and description of sediment sampling site, including, if possible, contamination history; characteristics: pH, organic carbon content, C/N ratio and granulometry (if appropriate) ;
- preparation of the formulated sediment: ingredients and characteristics (organic carbon content, pH, moisture, etc. at the start of the test);
- preparation of the test water (if reconstituted water is used) and characteristics (oxygen concentration, pH, conductivity, hardness, etc. at the start of the test);
- depth of sediment and overlying water;
- volume of overlying and pore water; weight of wet sediment with and without pore water;
- test vessels (material and size);
- method of preparation of stock solutions and test concentrations;
- application of test substance: test concentrations used, number of replicates and use of solvent if any;
- incubation conditions: temperature, light cycle and intensity, aeration (frequency and intensity);
- detailed information on feeding including type of food, preparation, amount and feeding regime.

Results:

- the nominal test concentrations, the measured test concentrations and the results of all analyses to determine the concentration of the test substance in the test vessel;
- water quality within the test vessels, i.e. pH, temperature, dissolved oxygen, hardness and ammonia;
- replacement of evaporated test water, if any;
- number of emerged male and female midges per vessel and per day;
- number of larvae which failed to emerge as midges per vessel;
- mean individual dry weight of larvae per vessel, and per instar, if appropriate;
- percent emergence per replicate and test concentration (male and female midges pooled);
- mean development rate of fully emerged midges per replicate and treatment rate (male and female midges pooled);
- estimates of toxic endpoints for example EC_x (and associated confidence intervals), NOEC and/or LOEC, and the statistical methods used for their determination;
- discussion of the results, including any influence on the outcome of the test resulting from deviations from this Guideline.

LITERATURE

(1) BBA (1995). Long-term toxicity test with *Chironomus riparius*: Development and validation of a new test system. Edited by M. Streloke and H.Köpp. Berlin 1995.

(2) R. Fleming *et al.* (1994). Sediment Toxicity Tests for Poorly Water-Soluble Substances. Final Report to them European Commission. Report No: EC 3738. August 1994. WRc, UK.

(3) SETAC (1993). Guidance Document on Sediment toxicity Tests and Bioassays for Freshwater and Marine Environments. From the WOSTA Workshop held in the Netherlands.

(4) ASTM International/E1706-00 (2002). Test Method for Measuring the Toxicity of Sediment-Associated Contaminants with Freshwater Invertebrates. pp 1125-1241. In ASTM International 2002 Annual Book of Standards. Volume 11.05. Biological Effects and Environmental Fate; Biotechnology; Pesticides. ASTM International, West Conshohocken, PA.

(5) Environment Canada (1997). Test for Growth and Survival in Sediment using Larvae of Freshwater Midges (*Chironomus tentans* or *Chironomus riparius*). Biological Test Method. Report SPE 1/RM/32. December 1997.

(6) US-EPA (2000). Methods for Measuring the Toxicity and Bioaccumulation of Sediment-associated Contaminants with Freshwater Invertebrates. Second edition. EPA 600/R-99/064. March 2000. Revision to the first edition dated June 1994.

(7) US-EPA/OPPTS 850.1735. (1996): Whole Sediment Acute Toxicity Invertebrates.

(8) US-EPA/OPPTS 850.1790. (1996): Chironomid Sediment toxicity Test.

(9) Milani, D., K.E. Day, D.J. McLeay, and R.S. Kirby. (1996). Recent intra- and inter-laboratory studies related to the development and standardisation of Environment Canada's biological test methods for measuring sediment toxicity using freshwater amphipods *(Hyalella azteca)* and midge larvae *(Chironomus riparius).* Technical Report. Environment Canada. National Water Research Institute. Burlington, Ontario, Canada.

(10) Sugaya, Y. (1997). Intra-specific variations of the susceptibility of insecticides *in Chironomus yoshimatsui*. Jp. J. Sanit. Zool. 48 (4): 345-350.

(11) Kawai, K. (1986). Fundamental studies on Chironomid allergy. I. Culture methods of some Japanese Chironomids (Chironomidae, Diptera). Jp. J. Sanit. Zool. 37(1):47-57.

(12) OECD (2000). Guidance Document on Aquatic Toxicity Testing of Difficult Substances and Mixtures. OECD Environment, Health and Safety Publications, Series on Testing and Assessment No. 23.

(13) Environment Canada. (1995). Guidance Document on Measurement of Toxicity Test Precision Using Control Sediments Spiked with a Reference Toxicant. Report EPS 1/RM/30. September 1995.

(14) OECD Test Guideline 207. (1984). Earthworm, Acute Toxicity Test.

(15) Suedel, B.C. and J.H. Rodgers. (1994). Development of formulated reference sediments for freshwater and estuarine sediment testing. Environ. Toxicol. Chem. 13:1163-1175.

(16) Naylor, C. and C. Rodrigues. (1995). Development of a test method for Chironomus riparius using a formulated sediment. Chemosphere 31:3291-3303.

(17) Dunnett, C.W. (1964). A multiple comparisons procedure for comparing several treatments with a control. J. Amer. Statis. Assoc., 50: 1096-1121.

(18) Dunnett, C. W. (1964). New tables for multiple comparisons with a control. Biometrics, 20: 482-491.

(19) Williams, D. A. (1971). A test for differences between treatment means when several dose levels are compared with a zero dose control. Biometrics, 27: 103-117.

(20) Williams, D.A. (1972). The comparison of several dose levels with a zero dose control. Biometrics, 28: 510-531.

(21) Rao, J.N.K. and A.J. Scott. (1992). A simple method for the analysis of clustered binary data. Biometrics 48:577-585.

(22) Christensen, E.R. 1984. Dose-response functions in aquatic toxicity testing and the Weibull model. Water Research 18, 213-221.

(23) Bruce and Versteeg 1992, A statistical procedure for modelling continuous toxicity data. Environmental Toxicology and Chemistry 11:1485-1494.

(24) Slob, W. 2002. Dose-response modelling of continuous endpoints. Toxicol. Sci., 66, 298-312.

ANNEX 1

DEFINITIONS

For the purpose of this guideline the following definitions are used:

Formulated sediment or reconstituted, artificial or synthetic sediment, is a mixture of materials used to mimic the physical components of a natural sediment.

Overlying water is the water placed over sediment in the test vessel.

Interstitial water or pore water is the water occupying space between sediment and soil particles.

Spiked water is the test water to which test substance has been added.

ANNEX 2

RECOMMENDATIONS FOR CULTURE OF *CHIRONOMUS RIPARIUS*

1. *Chironomus* larvae may be reared in crystallising dishes or larger containers. Fine quartz sand is spread in a thin layer of about 5 to 10 mm deep over the bottom of the container. Kieselgur (e.g. Merck, Art 8117) has also been shown to be a suitable substrate (a thinner layer of up to a very few mm is sufficient). Suitable water is then added to a depth of several cm. Water levels should be topped up as necessary to replace evaporative loss, and prevent desiccation. Water can be replaced if necessary. Gentle aeration should be provided. The larval rearing vessels should be held in a suitable cage which will prevent escape of the emerging adults. The cage should be sufficiently large to allow swarming of emerged adults, otherwise copulation may not occur (minimum is ca. 30 x 30 x 30 cm).

2. Cages should be held at room temperature or in a constant environment room at 20 ± 2 °C with a photo period of 16 hour light (intensity ca. 1000 lux), 8 hours dark. It has been reported that air humidity of less than 60 % RH can impede reproduction.

Dilution water

3. Any suitable natural or synthetic water may be used. Well water, dechlorinated tap water and artificial media (e.g. Elendt "M4" or "M7" medium, see below) are commonly used. The water has to be aerated before use. If necessary, the culture water may be renewed by pouring or siphoning the used water from culture vessels carefully without destroying the tubes of larvae.

Feeding larvae

4. *Chironomus* larvae should be fed with a fish flake food (Tetra Min®, Tetra Phyll® or other similar brand of proprietary fish food), at approximately 250 mg per vessel per day. This can be given as a dry ground powder or as a suspension in water: 1.0 g of flake food is added to 20 ml of dilution water and blended to give a homogenous mix. This preparation may be fed at a rate of about 5 ml per vessel per day. (shake before use.) Older larvae may receive more.

5. Feeding is adjusted according to the water quality. If the culture medium becomes ‘cloudy’, the feeding should be reduced. Food additions must be carefully monitored. Too little food will cause emigration of the larvae towards the water column, and too much food will cause increased microbial activity and reduced oxygen concentrations. Both conditions can result in reduced growth rates.

6. Some green algae (e.g. *Scenedesmus subspicatus*, *Chlorella vulgaris*) cells may also be added when new culture vessels are set up.

Feeding emerged adults

7. Some experimenters have suggested that a cotton wool pad soaked in a saturated sucrose solution may serve as a food for emerged adults.

Emergence

8. At 20 ± 2 °C adults will begin to emerge from the larval rearing vessels after approximately 13 - 15 days. Males are easily distinguished by having plumose antennae.

Egg masses

9. Once adults are present within the breeding cage, all larval rearing vessels should be checked three times weekly for deposition of the gelatinous egg masses. If present, the egg masses should be carefully removed. They should be transferred to a small dish containing a sample of the breeding water. Egg masses are used to start a new culture vessel (e.g. 2 - 4 egg masses / vessel) or are used for toxicity tests.

10. First instar larvae should hatch after 2 - 3 days.

Set-up of new culture vessels

11. Once cultures are established it should be possible to set up a fresh larval culture vessel weekly or less frequently depending on testing requirements, removing the older vessels after adult midges have emerged. Using this system a regular supply of adults will be produced with a minimum of management.

Preparation of test solutions "M4" and "M7"

12. Elendt (1990) has described the "M4" medium. The "M7" medium is prepared as the "M4" medium except for the substances indicated in Table 1, for which concentrations are four times lower in "M7" than in "M4". A publication on the "M7" medium is in preparation (Elendt, personal communication). The test solution should not be prepared according to Elendt and Bias (1990) for the concentrations of $NaSiO_3$ 5 H_2O, $NaNO_3$, KH_2PO_4 and K_2HPO_4 given for the preparation of the stock solutions are not adequate.

Preparation of the "M7"-medium

13. Each stock solution (I) is prepared individually and a combined stock solution (II) is prepared from these stock solutions (I) (see Table 1). Fifty ml from the combined stock Solution (II) and the amounts of each macro nutrient stock solution which are given in Table 2 are made up to 1 litre of deionised water to prepare the "M7" medium. A vitamin stock solution is prepared by adding three vitamins to deionised water as indicated in Table 3, and 0.1 ml of the combined vitamin stock solution are added to the final "M7" medium shortly before use. (The vitamin stock solution is stored frozen in small aliquots). The medium is aerated and stabilised.

Reference

BBA (1995). Long-term toxicity test with *Chironomus riparius*: Development and validation of a new test system. Edited by M. Streloke and H.Köpp. Berlin 1995.

Table 1: Stock solutions of trace elements for medium M4 and M7

Stock solutions (I)	Amount (mg) made up to 1 litre of deionised water	To prepare the combined stock solution (II): mix the following amounts (ml) of stock solutions (I) and make up to 1 litre of deionised water		Final concentrations in test solutions (mg/l)	
		M4	M7	M4	M7
H_3BO_3 (1)	57190	1.0	0.25	2.86	0.715
$MnCl_2 \bullet 4\ H_2O$ (1)	7210	1.0	0.25	0.361	0.090
LiCl (1)	6120	1.0	0.25	0.306	0.077
RbCl (1)	1420	1.0	0.25	0.071	0.018
$SrCl_2 \bullet 6\ H_2O$ (1)	3040	1.0	0.25	0.152	0.038
NaBr (1)	320	1.0	0.25	0.016	0.004
$Na_2MoO_4 \bullet 2\ H_2O$ (1)	1260	1.0	0.25	0.063	0.016
$CuCl_2 \bullet 2\ H_2O$ (1)	335	1.0	0.25	0.017	0.004
$ZnCl_2$	260	1.0	1.0	0.013	0.013
$CoCl_2 \bullet 6\ H_2O$	200	1.0	1.0	0.010	0.010
KI	65	1.0	1.0	0.0033	0.0033
Na_2SeO_3	43.8	1.0	1.0	0.0022	0.0022
NH_4VO_3	11.5	1.0	1.0	0.00058	0.00058
$Na_2EDTA \bullet 2\ H_2O$ (1)(2)	5000	20.0	5.0	2.5	0.625
$FeSO_4 \bullet 7\ H_2O$ (1)(2)	1991	20.0	5.0	1.0	0.249

(1) These substances differ in M4 and M7, as indicated above.
(2) These solutions are prepared individually, then poured together and autoclaved immediately.

Table 2: Macro nutrient stock solutions for medium M4 and M7

	Amount made up to 1 litre of deionised water (mg)	Amount of macro nutrient stock solutions added to prepare medium M4 and M7 (ml/l)	Final concentrations in test solutions M4 and M7 (mg/l)
$CaCl_2 \bullet 2\ H_2O$	293800	1.0	293.8
$MgSO_4 \bullet 7\ H_2O$	246600	0.5	123.3
KCl	58000	0.1	5.8
$NaHCO_3$	64800	1.0	64.8
$NaSiO_3 \bullet 9\ H_2O$	50000	0.2	10.0
$NaNO_3$	2740	0.1	0.274
KH_2PO_4	1430	0.1	0.143
K_2HPO_4	1840	0.1	0.184

Table 3: Vitamin stock solution for medium M4 and M7

All three vitamin solutions are combined to make a single vitamin stock solution.

	Amount made up to 1 litre of deionised water (mg)	Amount of vitamin stock solution added to prepare medium M4 and M7 (ml/l)	Final concentrations in test solutions M4 and M7 (mg/l)
Thiamine hydrochloride	750	0.1	0.075
Cyanocobalamin (B12)	10	0.1	0.0010
Biotine	7.5	0.1	0.00075

References

Elendt, B.P. (1990): Selenium Deficiency in Crustacean. *Protoplasma* 154, 25-33

Elendt, B.P. & W.-R. Bias (1990): Trace Nutrient Deficiency in *Daphnia magna* Cultured in Standard Medium for Toxicity Testing. Effects on the Optimization of Culture Conditions on Life History Parameters of *D. magna*. *Water Research* 24 (9), 1157-1167

ANNEX 3

PREPARATION OF FORMULATED SEDIMENT

Sediment composition

The composition of the formulated sediment should be as follows:

Constituent	Characteristics	% of sediment dry weight
Peat	Sphagnum moss peat, as close to pH 5.5-6.0 as possible, no visible plant remains, finely ground (particle size ≤ 1 mm) and air dried	4-5
Quartz sand	Grain size: > 50% of the particles should be in the range of 50-200 μm	75-76
Kaolinite clay	Kaolinite content ≥ 30%	20
Organic carbon	Adjusted by addition of peat and sand	2 (±0.5)
Calcium carbonate	$CaCO_3$, pulverised, chemically pure	0.05 – 0.1
Water	Conductivity ≤ 10 μS/cm	30 – 50

Preparation

The peat is air dried and ground to a fine powder. A suspension of the required amount of peat powder in deionised water is prepared using a high-performance homogenising device. The pH of this suspension is adjusted to 5.5 ± 0.5 with $CaCO_3$. The suspension is conditioned for at least two days with gentle stirring at 20 ± 2 °C, to stabilise pH and establish a stable microbial component. pH is measured again and should be 6.0 ± 0.5. Then the peat suspension is mixed with the other constituents (sand and kaolin clay) and deionised water to obtain an homogeneous sediment with a water content in a range of 30–50 per cent of dry weight of the sediment. The pH of the final mixture is measured once again and is adjusted to 6.5 to 7.5 with $CaCO_3$ if necessary. Samples of the sediment are taken to determine the dry weight and the organic carbon content. Then, before it is used in the chironomid toxicity test, it is recommended that the formulated sediment be conditioned for seven days under the same conditions which prevail in the subsequent test.

Storage

The dry constituents for preparation of the artificial sediment may be stored in a dry and cool place at room temperature. The formulated (wet) sediment should not be stored prior to its use in the test. It should be used immediately after the 7 days conditioning period that ends its preparation.

References

OECD Guideline 207. (1984). Earthworm, Acute Toxicity Test.
Meller, M., P. Egeler, J. Rombke, H. Schallnass, R. Nagel and B. Streit. (1998). Short-term Toxicity of Lindane, Hexachlorobenzene and Copper Sulfate on Tubificid Sludgeworms (Oligochaeta) in Artificial Media. Ecotox. and Environ. Safety, 39, 10-20.

ANNEX 4

CHEMICAL CHARACTERISTICS OF AN ACCEPTABLE DILUTION WATER

SUBSTANCE	CONCENTRATIONS
Particulate matter	< 20 mg/l
Total organic carbon	< 2 mg/l
Unionised ammonia	< 1 μg/l
Hardness as $CaCO_3$	<400 mg/l*
Residual chlorine	< 10 μg/l
Total organophosphorus pesticides	< 50 ng/l
Total organochlorine pesticides plus polychlorinated biphenyls	< 50 ng/l
Total organic chlorine	< 25 ng/l

*However, it should be noted that if there is an interaction suspected between hardness ions and the test substance, lower hardness water should be used (and thus, Elendt Medium M4 must not be used in this situation).

ANNEX 5

GUIDANCE FOR MONITORING EMERGENCE OF CHIRONOMID LARVAE

Emergence traps are placed on the test beakers. These traps are needed from day 20 to the end of the test. Example of trap used is drawn below:

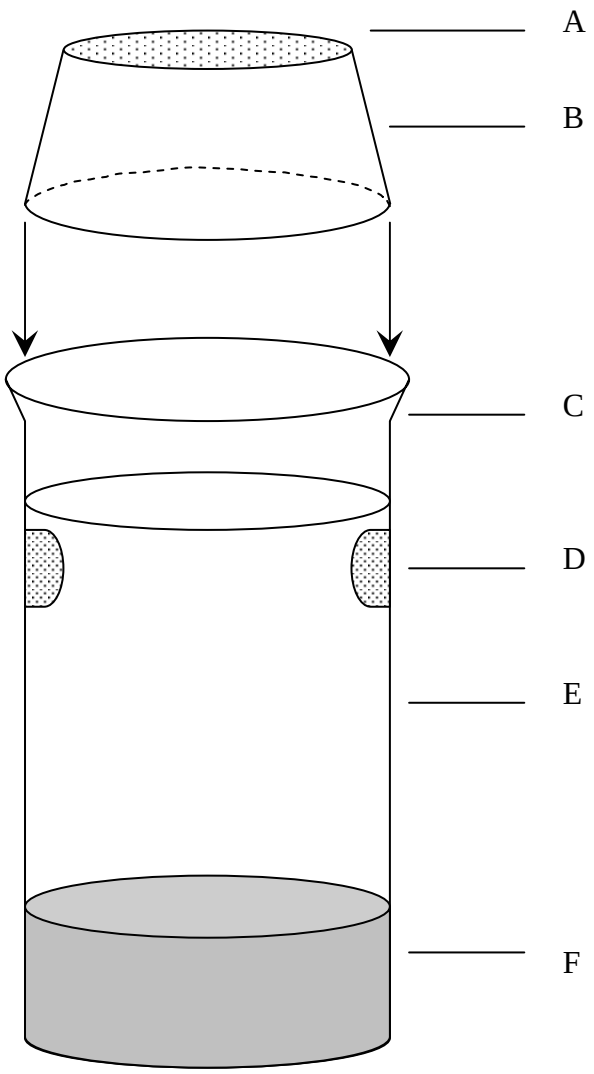

A: the nylon screen
B: the inverted plastic cups
C: the lipless exposure beaker
D: the water exchange screen ports
E: water
F: sediment

EXHIBIT 46

Adopted :
13 April 2004

OECD GUIDELINES FOR THE TESTING OF CHEMICALS

Sediment-Water Chironomid Toxicity Test Using Spiked Sediment

INTRODUCTION

1. This Test Guideline is designed to assess the effects of prolonged exposure of chemicals to the sediment-dwelling larvae of the freshwater dipteran *Chironomus* sp. It is based on existing toxicity test protocols for *Chironomus riparius* and *Chironomus tentans* which have been developed in Europe (1)(2)(3) and North America (4)(5)(6)(7)(8) and ring-tested (1)(6)(9). Other well documented chironomid species may also be used, for example *Chironomus yoshimatsui* (10)(11).

2. The exposure scenario used in this guideline is spiking of sediment with the test substance. The selection of the appropriate exposure scenario depends on the intended application of the test. The scenario of spiking sediment is intended to simulate accumulated levels of chemicals persisting in the sediment. This exposure system involves spiking sediment of a sediment-water test system.

3. Substances that need to be tested towards sediment-dwelling organisms usually persist in this compartment over long time periods. The sediment-dwelling organisms may be exposed via a number of routes. The relative importance of each exposure route, and the time taken for each to contribute to the overall toxic effects, is dependent on the physical-chemical properties of the chemical concerned. For strongly adsorbing substances (e.g. with log K_{ow} > 5) or for substances covalently binding to sediment, ingestion of contaminated food may be a significant exposure route. In order not to underestimate the toxicity of highly lipophilic substances, the use of food added to the sediment before application of the test substance may be considered. In order to take all potential routes of exposure into account the focus of this Guideline is on long-term exposure. The test duration is in the range of 20 - 28 days for *C. riparius* and *C. yoshimatsui*, and 28 - 65 days for *C. tentans*. If short-term data are required for a specific purpose, for example to investigate the effects of unstable chemical, additional replicates may be removed after a ten-day period.

4. The measured endpoints are the total number of adults emerged and the time to emergence. It is recommended that measurements of larval survival and growth should only be made after a ten-day period if additional short-term data are required, using additional replicates as appropriate.

5. The use of formulated sediment is recommended. Formulated sediment has several advantages over natural sediments:

- the experimental variability is reduced because it forms a reproducible "standardised matrix" and the need to find uncontaminated and clean sediment sources is eliminated;
- the tests can be initiated at any time without encountering seasonal variability in the test sediment and there is no need to pre-treat the sediment to remove indigenous fauna; the use of formulated sediment also reduces the cost associated with the field collection of sufficient amounts of sediment for routine testing;
- the use of formulated sediment allows for comparisons of toxicity and ranking substances accordingly.

6. Definitions used are given in Annex 1.

PRINCIPLE OF THE TEST

7. First instar chironomid larvae are exposed to a concentration range of the test chemical in sediment - water systems. The test substance is spiked into the sediment and first instar larvae are subsequently introduced into test beakers in which the sediment and water concentrations have been stabilised. Chironomid emergence and development rate is measured at the end of the test. Larval survival and weight may also be measured after 10 days if required (using additional replicates as appropriate). These data are analysed either by using a regression model in order to estimate the concentration that would cause x % reduction in emergence or larval survival or growth (e.g. EC_{15}, EC_{50} etc.), or by using statistical hypothesis testing to determine a NOEC/LOEC. The latter requires comparison of effect values with control values using statistical tests.

INFORMATION ON THE TEST SUBSTANCE

8. The water solubility of the test substance, its vapour pressure, measured or calculated partitioning into sediment and stability in water and sediment should be known. A reliable analytical method for the quantification of the test substance in overlying water, pore water and sediment with known and reported accuracy and limit of detection should be available. Useful information includes the structural formula and purity of the test substance. Chemical fate of the test substance (e.g. dissipation, abiotic and biotic degradation, etc.) also is useful information. Further guidance for testing substances with physical-chemical properties that make them difficult to perform the test is provided in (12)

REFERENCE SUBSTANCES

9. Reference substances may be tested periodically as a means of assuring that the test protocol and test conditions are reliable. Examples of reference toxicants used successfully in ring-tests and validation studies are: lindane, trifluralin, pentachlorophenol, cadmium chloride and potassium chloride (1)(2)(5)(6)(13).

VALIDITY OF THE TEST

10. For the test to be valid the following conditions apply:

- the emergence in the controls must be at least 70% at the end of the test (1)(6);
- *C. riparius* and *C. yoshimatsui* emergence to adults from control vessels should occur between 12 and 23 days after their insertion into the vessels; for *C. tentans*, a period of 20 to 65 days is necessary.
- at the end of the test, pH and the dissolved oxygen concentration should be measured in each vessel. The oxygen concentration should be at least 60 per cent of the air saturation value (ASV) at the temperature used, and the pH of overlying water should be in the 6-9 range in all test vessels;
- the water temperature should not differ by more than ± 1.0 °C. The water temperature could be controlled by isothermal room and in that case the room temperature should be confirmed in an appropriate time intervals.

DESCRIPTION OF THE METHOD

Test vessels

11. The study is conducted in glass 600 ml beakers measuring 8 cm in diameter. Other vessels are suitable, but they should guarantee a suitable depth of overlying water and sediment. The sediment surface should be sufficient enough to provide 2 to 3 cm^2 per larvae. The ratio of the depth of the sediment layer to the depth of the overlying water should be 1:4. Test vessels and other apparatus that will come into contact with the test system should be made entirely of glass or other chemically inert material (e.g. Teflon).

Selection of species

12. The species to be used in the test is preferably *Chironomus riparius*. *Chironomus tentans* is also suitable but more difficult to handle and requires a longer test period. *Chironomus yohimatsui* may also be used. Details of culture methods are given in Annex 2 for *Chironomus riparius*. Information on culture conditions is also available for other species, i.e. *Chironomus tentans* (4) and *Chironomus yoshimatsui* (11). Identification of species must be confirmed before testing but is not required prior to every test if organisms come from an in-house culture.

Sediment

13. Formulated sediment (also called reconstituted, artificial or synthetic sediment) should preferably be used. However, if natural sediment is used, it should be characterised (at least pH, organic carbon content, determination of other parameters such as C/N ratio and granulometry are also recommended), and it should be free from any contamination and other organisms that might compete with, or consume the chironomids. It is also recommended that, before it is used in a chironomid toxicity test, the natural sediment be conditioned for seven days under the same conditions which prevail in the subsequent test. The following formulated sediment, based on the artificial soil used in Guideline 207 (14), is recommended for use in this test (1)(15)(16):

(a) 4-5 % (dry weight) peat: as close to pH 5.5 to 6.0 as possible; it is important to use peat in powder form, finely ground (particle size ≤ 1 mm) and only air dried.
(b) 20 % (dry weight) kaolin clay (kaolinite content preferably above 30 %).
(c) 75-76 % (dry weight) quartz sand (fine sand should predominate with more than 50 per cent of the particles between 50 and 200 μm).
(d) Deionised water is added to obtain a moisture content of the final mixture in a range of 30–50 %.
(e) Calcium carbonate of chemically pure quality ($CaCO_3$) is added to adjust the pH of the final mixture of the sediment to 7.0 ± 0.5. Organic carbon content of the final mixture should be 2 % (± 0.5 %) and is to be adjusted by the use of appropriate amounts of peat and sand, according to (a) and (c).

14. The source of peat, kaolin clay and sand should be known. The sediment components should be checked for the absence of chemical contamination (e.g. heavy metals, organochlorine compounds, organophosphorous compounds, etc.). An example for the preparation of the formulated sediment is described in Annex 3. Mixing of dry constituents is also acceptable if it is demonstrated that after addition of overlying water a separation of sediment constituents (e.g. floating of peat particles) does not occur, and that the peat or the sediment is sufficiently conditioned.

Water

15. Any water which conforms to the chemical characteristics of acceptable dilution water as listed in Annexes 2 and 4 is suitable as test water. Any suitable water, natural water (surface or ground water), reconstituted water (see Annex 2) or dechlorinated tap water are acceptable as culturing water and test water if chironomids will survive in it for the duration of the culturing and testing without showing signs of stress. At the start of the test, the pH of the test water should be between 6 and 9 and the total hardness not higher than 400 mg/l as $CaCO_3$. However, if there is an interaction suspected between hardness ions and the test substance, lower hardness water should be used (and thus, Elendt Medium M4 must not be used in this situation). The same type of water should be used throughout the whole study. The water quality characteristics listed in Annex 4 should be measured at least twice a year or when it is suspected that these characteristics may have changed significantly.

Stock solutions - Spiked sediments

16. Spiked sediments of the chosen concentration are usually prepared by addition of a solution of the test substance directly to the sediment. A stock solution of the test substance dissolved in deionised water is mixed with the formulated sediment by rolling mill, feed mixer or hand mixing. If poorly soluble in water, the test substance can be dissolved in as small a volume as possible of a suitable organic solvent (e.g. hexane, acetone or chloroform). This solution is then mixed with 10 g of fine quartz sand for one test vessel. The solvent is allowed to evaporate and it has to be totally removed from sand; the sand is then mixed with the suitable amount of sediment per test beaker. Only agents which volatilise readily can be used to solubilise, disperse or emulsify the test substance. It should be born in mind that the sand provided by the test substance and sand mixture, has to be taken into account when preparing the sediment (i.e. the sediment should thus be prepared with less sand). Care should be taken to ensure that the test substance added to sediment is thoroughly and evenly distributed within the sediment. If necessary, subsamples can be analysed to determine degree of homogeneity.

TEST DESIGN

17. The test design relates to the selection of the number and spacing of the test concentrations, the number of vessels at each concentration and the number of larvae per vessel. Designs for EC point estimation, for estimation of NOEC, and for conducting a limit test are described.

Design for analysis by regression

18. The effect concentration (e.g. EC_{15}, EC_{50}) and the concentration range, over which the effect of the test substance is of interest, should be spanned by the concentrations included in the test. Generally, the accuracy and especially validity, with which estimates of effect concentrations (EC_x) can be made, is improved when the effect concentration is within the range of concentrations tested. Extrapolating much below the lowest positive concentration or above the highest concentration should be avoided. A preliminary range-finding test is helpful for selecting the range of concentrations to be used (see paragraph 27).

19. If the EC_x is to be estimated, at least five concentrations and three replicates for each concentration should be tested. In any case, it is advisable that sufficient test concentrations are used to allow good model estimation. The factor between concentrations should not be greater than two (an exception could be made in cases when the dose response curve has a shallow slope). The number of replicates at each treatment can be reduced if the number of test concentrations with different responses is

increased. Increasing the number of replicates or reducing the size of the test concentration intervals tends to lead to narrower confidence intervals for the test. Additional replicates are required if 10–day larval survival and growth are to be estimated.

Design for estimation of a NOEC/LOEC

20. If the LOEC or NOEC are to be estimated, five test concentrations with at least four replicates should be used and the factor between concentrations should not be greater than two. The number of replicates should be sufficient to ensure adequate statistical power to detect a 20 % difference from the control at the 5% level of significance (p = 0.05). With the development rate, an Analysis of Variance (ANOVA) is usually appropriate, such as Dunnett-test and Williams-test (17)(18)(19)(20). In the emergence ratio the Cochran-Armitage, Fisher's exact (with Bonferroni correction), or Mantel-Haentzal tests may be used.

Limit test

21. A limit test may be performed (one test concentration and control) if no effects were seen in the preliminary range-finding test. The purpose of the limit test is to perform a test at a concentration sufficiently high to enable decision makers to exclude possible toxic effects of the substance, and the limit is set at a concentration which is not expected to appear in any situation. A concentration of 1000 mg/kg (dry weight) is recommended. Usually, at least six replicates for both the treatment and control are necessary. Adequate statistical power to detect a 20 % difference from the control at the 5 % level of significance (p = 0.05) should be demonstrated. With metric response (development rate and weight), the t-test is a suitable statistical method if data meet the requirements of this test (normality, homogeneous variances). The unequal-variance t-test or a non parametric test, such as the Wilcoxon-Mann-Whithey test may be used, if these requirements are not fulfilled. With the emergence ratio, the Fisher exact test is appropriate.

PROCEDURE

Conditions of exposure

Preparation of spiked sediment - water system

22. The spiking procedure described in OECD Guideline 207: Earthworm, Acute Toxicity Test is recommended for application of the test substance (14). The spiked sediments are placed in the vessels and overlying water is added to produce a sediment-water volume ratio of 1:4 (see paragraphs 11 and 15). The depth of the sediment layer should be in the range of 1.5 – 3 cm. To avoid separation of sediment ingredients and re-suspension of fine material during addition of test water in the water column, the sediment can be covered with a plastic disc while water is poured onto it, and the disc removed immediately afterwards. Other devices may also be appropriate.

23. The test vessels should be covered (e.g. by glass plates). If necessary, during the study the water levels will be topped to the original volume in order to compensate for water evaporation. This should be performed using distilled or deionised water to prevent build-up of salts.

Stabilisation

24. Once the spiked sediment with overlying water has been prepared, it is desirable to allow partitioning of the test substance from the aqueous phase to the sediment (3)(4)(6)(13). This should

preferably be done under the conditions of temperature and aeration used in the test. Appropriate equilibration time is sediment and chemical specific, and can be in the order of hours to days and in rare cases up to several weeks (4-5 weeks). As this would leave time for degradation of many chemicals, equilibrium is not awaited but an equilibration period of 48 hours is recommended. At the end of this further equilibration period, the concentration of the test substance should be measured in the overlying water, the pore water and the sediment, at least at the highest concentration and a lower one (see paragraph 38). These analytical determinations of the test substance allow for calculation of mass balance and expression of results based on measured concentrations.

Addition of test organisms

25. Four to five days before adding the test organisms to the test vessels, egg masses should be taken from the cultures and placed in small vessels in culture medium. Aged medium from the stock culture or freshly prepared medium may be used. If the latter is used, a small amount of food, for example green algae and/or a few droplets of filtrate from a finely ground suspension of flaked fish food should be added to the culture medium (see Annex 2). Only freshly laid egg masses should be used. Normally, the larvae begin to hatch a couple of days after the eggs are laid (2 to 3 days for *Chironomus riparius* at 20 °C and 1 to 4 days for *Chironomus tentans* at 23 °C and *Chironomus yoshimatui* at 25 °C) and larval growth occurs in four instars, each of 4-8 days duration. First instar larvae (2-3 or 1-4 days post hatching) should be used in the test. The instar of midges can possibly be checked using head capsule width (6).

26. Twenty first instar larvae are allocated randomly to each test vessel containing the spiked sediment and water, using a blunt pipette. Aeration of the water has to be stopped while adding the larvae to test vessels and remain so for another 24 hours after addition of larvae (see paragraphs 25 and 32). According to the test design used (see paragraphs 19 and 20), the number of larvae used per concentration is at least 60 for the EC point estimation and 80 for determination of NOEC.

Test concentrations

27. A range-finding test may be helpful to determine the range of concentrations for the definitive test. For this purpose a series of widely spaced concentrations of the test substance are used. In order to provide the same density of surface per chironomids, which is to be used for the definitive test, chironomids are exposed to each concentration of the test substance for a period which allows estimation of appropriate test concentrations, and no replicates are required.

28. The test concentrations for the definitive test are decided based on the result of the range-finding test. At least five concentrations should be used and selected as described in paragraphs 18 to 20.

Controls

29. Control vessels without any test chemical but including sediment should be included in the test with the appropriate number of replicates (see paragraphs 19-20). If a solvent has been used for application of test substance (see paragraph 16), a sediment solvent control should be added.

Test system

30. Static systems are used. Semi-static or flow-through systems with intermittent or continuous renewal of overlying water might be used in exceptional cases as for instance if water quality specifications become inappropriate for the test organism or affect chemical equilibrium (e.g. dissolved oxygen levels fall too low, the concentration of excretory products rises too high or minerals leach from sediment and affect

pH and/or water hardness). However, other methods for ameliorating the quality of overlying water, such as aeration, will normally suffice and be preferable.

Food

31. It is necessary to feed the larvae, preferably daily or at least three times per week. Fish-food (a suspension in water or finely ground food, for example Tetra-Min or Tetra-Phyll; see details in Annex 2) in the amount of 0.25-0.5 mg (0.35-0.5 mg for *C. yoshimatui*) per larvae per day seems adequate for young larvae for the first 10 days. Slightly more food may be necessary for older larvae: 0.5- 1 mg per larvae per day should be sufficient for the rest of the test. The food ration should be reduced in all treatments and control if fungal growth is seen or if mortality is observed in controls. If fungal development cannot be stopped the test is to be repeated. When testing strongly adsorbing substances (e.g. with log K_{ow} > 5), or substances covalently binding to sediment, the amount of food necessary to ensure survival and natural growth of the organisms may be added to the formulated sediment before the stabilisation period. For this, plant material must be used instead of fish food, for example the addition of 0.5% (dry weight) finely ground leaves of stinging nettle (*Urtica dioeca*), mulberry (*Morus alba*), white clover (*Trifolium repens*), spinach (*Spinacia oleracea*) or of other plant material (*Cerophyl* or alpha-cellulose) may be used.

Incubation conditions

32. Gentle aeration of the overlying water in test vessels is supplied preferably 24 hours after addition of the larvae and is pursued throughout the test (care should be taken that dissolved oxygen concentration does not fall below 60 per cent of ASV). Aeration is provided through a glass Pasteur pipette fixed 2-3 cm above the sediment layer (i.e. one or few bubbles/sec). When testing volatile chemicals, consideration may be given not to aerate the sediment-water system.

33. The test is conducted at a constant temperature of 20°C (± 2°C). For *C. tentans* and *C. yoshimatui* recommended temperatures are 23 °C and 25 °C (± 2°C), respectively. A 16 hours photoperiod is used and the light intensity should be 500 to 1000 lux.

Exposure duration

34. The exposure commences with the addition of larvae to the spiked and control vessels. The maximum exposure duration is 28 days for *C. riparius* and *C. yoshimatsui*, and 65 days for *C. tentans*. If midges emerge earlier, the test can be terminated after a minimum of five days after emergence of the last adult in the control.

<u>Observations</u>

Emergence

35. The development time and the total number of fully emerged male and female midges are determined. Males are easily identified by their plumose antennae.

36. The test vessels should be observed at least three times per week to make visual assessment of any abnormal behaviour (for example leaving sediment, unusual swimming), compared with the control. During the period of expected emergence a daily count of emerged midges is necessary. The sex and number of fully emerged midges are recorded daily. After identification the midges are removed from the vessels. Any egg masses deposited prior to the termination of the test should be recorded and then

removed to prevent re-introduction of larvae into the sediment. The number of visible pupae that have failed to emerge is also recorded. Guidance on measurement of emergence is provided in Annex 5.

Growth and survival

37. If data on 10-day larval survival and growth are to be provided, additional test vessels should be included at the start, so that they may be used subsequently. The sediment from these additional vessels is sieved using a 250 µm sieve to retain the larvae. Criteria for death are immobility or lack of reaction to a mechanical stimulus. Larvae not recovered should also be counted as dead (larvae which have died at the beginning of the test may have been degraded by microbes). The (ash free) dry weight of the surviving larvae per test vessel is determined and the mean individual dry weight per vessel calculated. It is useful to determine which instar the surviving larvae belong to; for that measurement of the width of the head capsule of each individual can be used.

Analytical measurements

Concentration of the test substance

38. Prior to test commencement (i.e. addition of larvae), samples of bulk sediment are removed from at least one vessel per treatment for the analytical determination of the test substance concentration in the sediment. It is recommended that, as a minimum, samples of the overlying water, the pore water and the sediment be analysed at the start (see paragraph 24) and at the end of the test, at the highest concentration and a lower one. These determinations of test substance concentration inform about the behaviour/ partitioning of the tested chemical in the water-sediment system.

39. When intermediate measurements are made (for example at day 7) and if the analysis needs large samples which cannot be taken from test vessels without influencing the test system, analytical determinations should be performed on samples from additional test vessels treated in the same way (including the presence of test organisms) but not used for biological observations.

40. Centrifugation at, for example, 10,000 g and 4°C for 30 min. is the recommended procedure to isolate interstitial water. However, if the test substance is demonstrated not to adsorb to filters, filtration may also be acceptable. In some cases it might not be possible to analyse concentrations in the pore water as the sample size is too small.

Physical-chemical parameters

41. The pH and temperature of the test vessels should be measured in an appropriate manner (see paragraph 10). Hardness and ammonia should be measured in the controls and one test vessel at the highest concentration at the start and the end of the test.

DATA AND REPORTING

Treatment of results

42. The purpose of this test is to determine the effect of the test substance on the development rate and the total number of fully emerged male and female midges, or in the case of the 10-day test effects on survival and weight of the larvae. If there are no indications of statistically different sensitivities of sexes, male and female results may be pooled for statistical analyses. The sensitivity differences between sexes can be statistically judged by, for example, a χ^2-r × 2 table test. Larval survival and mean individual dry weight per vessel must be determined after 10 days where required.

43. Effect concentrations expressed and based on dry weight, are calculated preferably based on measured sediment concentrations at the beginning of the test (see paragraph 38).

44. To compute a point estimate for the EC_{50} or any other EC_x, the per-vessel statistics may be used as true replicates. In calculating a confidence interval for any EC_x the variability among vessels should be taken into account, or it should be shown that this variability is so small that it can be ignored. When the model is fitted by Least Squares, a transformation should be applied to the per-vessel statistics in order to improve the homogeneity of variance. However, EC_x values should be calculated after the response is transformed back to the original value.

45. When the statistical analysis aims at determining the NOEC/LOEC by hypothesis testing, the variability among vessels needs to be taken into account, for example by a nested ANOVA. Alternatively, more robust tests (21) can be appropriate in situations where there are violations of the usual ANOVA assumptions.

Emergence ratio

46. Emergence ratios are quantal data, and can be analyzed by the Cochran-Armitage test applied in step-down manner where a monotonic dose-response is expected and these data are consistent with this expectation. If not, a Fisher's exact or Mantel-Haentzal test with Bonferroni-Holm adjusted p-values can be used. If there is evidence of greater variability between replicates within the same concentration than a binomial distribution would indicate (often referenced as "extra-binomial" variation), then a robust Cochran-Armitage or Fisher exact test such as proposed in (21), should be used.

The sum of midges emerged per vessel, n_e, is determined and divided by the number of larvae introduced, n_a:

$$ER = \frac{n_e}{n_a}$$

where:

ER = emergence ratio
n_e = number of midges emerged per vessel
n_a = number of larvae introduced per vessel

47. An alternative that is most appropriate for large sample sizes, when there is extra binomial variance, is to treat the emergence ratio as a continuous response and use procedures such as William's test when a monotonic dose-response is expected and is consistent with these ER data. Dunnett's test would be

appropriate where monotonicity does not hold. A large sample size is defined here as the number emerged and the number not emerging both exceeding five, on a per replicate (vessel) basis.

48. To apply ANOVA methods, values of ER should first be transformed by the arcsin-sqrt-transformation or Tukey-Freeman transformation to obtain an approximate normal distribution and to equalise variances. The Cochran-Armitage, Fisher's exact (Bonferroni), or Mantel-Haentzal tests can be applied when using the absolute frequencies. The arcsin-sqrt transformation is applied by taking the inverse sine ($\sin^{-1}$) of the square root of ER.

49. For emergence ratios, EC_x-values are calculated using regression analysis (or e.g. probit (22), logit, Weibull, appropriate commercial software etc.). If regression analysis fails (e.g. when there are less than two partial responses), other non-parametric methods such as moving average or simple interpolation are used.

Development rate

50. The mean development time represents the mean time span between the introduction of larvae (day 0 of the test) and the emergence of the experimental cohort of midges. (For the calculation of the true development time, the age of larvae at the time of introduction should be considered). The development rate is the reciprocal of the development time (unit: 1/day) and represents that portion of larval development which takes place per day. The development rate is preferred for the evaluation of these sediment toxicity studies as its variance is lower, and it is more homogeneous and closer to normal distribution as compared to development time. Hence, powerful parametric test procedures may be used with development rate rather than with development time. For development rate as a continuous response, EC_x-values can be estimated by using regression analysis (e.g. (23), (24)).

51. For the following statistical tests, the number of midges observed on inspection day x are assumed to be emerged at the mean of the time interval between day x and day x–l (l = length of the inspection interval, usually 1 day). The mean development rate per vessel ($\bar{x}$) is calculated according to:

$$\bar{x} = \sum_{i=1}^{m} \frac{f_i x_i}{n_e}$$

where:

$\bar{x}$: mean development rate per vessel
i : index of inspection interval
m : maximum number of inspection intervals
f_i : number of midges emerged in the inspection interval i
n_e : total number of midges emerged at the end of experiment ($= \sum f_i$)
x_i : development rate of the midges emerged in interval i

$$x_i = 1 \Big/ \left(day_i - \frac{l_i}{2} \right)$$

where:

day_i: inspection day (days since application)
l_i : length of inspection interval i (days, usually 1 day)

Test report

52. The test report must at least provide the following information:

Test substance:

- physical nature and, where relevant, physical-chemical properties (water solubility, vapour pressure, partition coefficient in soil (or in sediment if available), stability in water, etc.);
- chemical identification data (common name, chemical name, structural formula, CAS number, etc.) including purity and analytical method for quantification of test substance.

Test species:

- test animals used: species, scientific name, source of organisms and breeding conditions;
- information on handling of egg masses and larvae;
- age of test animals when inserted into test vessels.

Test conditions:

- sediment used, i.e. natural or formulated sediment;
- for natural sediment, location and description of sediment sampling site, including, if possible, contamination history; characteristics: pH, organic carbon content, C/N ratio and granulometry (if appropriate).
- preparation of the formulated sediment: ingredients and characteristics (organic carbon content, pH, moisture, etc. at the start of the test);
- preparation of the test water (if reconstituted water is used) and characteristics (oxygen concentration, pH, conductivity, hardness, etc. at the start of the test);
- depth of sediment and overlying water;
- volume of overlying and pore water; weight of wet sediment with and without pore water;
- test vessels (material and size);
- method of spiking sediment: test concentrations used, number of replicates and use of solvent if any;
- stabilisation equilibrium phase of the spiked sediment-water system: duration and conditions;
- incubation conditions: temperature, light cycle and intensity, aeration (frequency and intensity);
- detailed information on feeding including type of food, preparation, amount and feeding regime.

Results:

- the nominal test concentrations, the measured test concentrations and the results of all analyses to determine the concentration of the test substance in the test vessel;
- water quality within the test vessels, i.e. pH, temperature, dissolved oxygen, hardness and ammonia;
- replacement of evaporated test water, if any;
- number of emerged male and female midges per vessel and per day;
- number of larvae which failed to emerge as midges per vessel;
- mean individual dry weight of larvae per vessel, and per instar, if appropriate;
- percent emergence per replicate and test concentration (male and female midges pooled);
- mean development rate of fully emerged midges per replicate and treatment rate (male and female midges pooled);

- estimates of toxic endpoints, for example ECx (and associated confidence intervals), NOEC and/or LOEC, and the statistical methods used for their determination;
- discussion of the results, including any influence on the outcome of the test resulting from deviations from this Guideline.

LITERATURE

(1) BBA (1995). Long-term toxicity test with *Chironomus riparius*: Development and validation of a new test system. Edited by M. Streloke and H.Köpp. Berlin 1995.

(2) R. Fleming *et al.* (1994). Sediment Toxicity Tests for Poorly Water-Soluble Substances. Final Report to them European Commission. Report No: EC 3738. August 1994. WRc, UK.

(3) SETAC (1993). Guidance Document on Sediment toxicity Tests and Bioassays for Freshwater and Marine Environments. From the WOSTA Workshop held in the Netherlands.

(4) ASTM International/E1706-00 (2002). Test Method for Measuring the Toxicity of Sediment-Associated Contaminants with Freshwater Invertebrates. pp 1125-1241. In ASTM International 2002 Annual Book of Standards. Volume 11.05. Biological Effects and Environmental Fate;Biotechnology; Pesticides. ASTM. International, West Conshohocken, PA.

(5) Environment Canada (1997). Test for Growth and Survival in Sediment using Larvae of Freshwater Midges (*Chironomus tentans* or *Chironomus riparius*). Biological Test Method. Report SPE 1/RM/32. December 1997.

(6) US-EPA (2000). Methods for Measuring the Toxicity and Bioaccumulation of Sediment-associated Contaminants with Freshwater Invertebrates. Second edition. EPA 600/R-99/064. March 2000. Revision to the first edition dated June 1994.

(7) US-EPA/OPPTS 850.1735. (1996): Whole Sediment Acute Toxicity Invertebrates.

(8) US-EPA/OPPTS 850.1790. (1996): Chironomid Sediment toxicity Test.

(9) Milani, D., K.E. Day, D.J. McLeay, and R.S. Kirby. (1996). Recent intra- and inter-laboratory studies related to the development and standardisation of Environment Canada's biological test methods for measuring sediment toxicity using freshwater amphipods *(Hyalella azteca)* and midge larvae *(Chironomus riparius).* Technical Report. Environment Canada. National Water Research Institute. Burlington, Ontario, Canada.

(10) Sugaya, Y. (1997). Intra-specific variations of the susceptibility of insecticides *in Chironomus yoshimatsui*. Jp. J. Sanit. Zool. 48 (4): 345-350.

(11) Kawai, K. (1986). Fundamental studies on Chironomid allergy. I. Culture methods of some Japanese Chironomids (Chironomidae, Diptera). Jp. J. Sanit. Zool. 37(1):47-57.

(12) OECD (2000). Guidance Document on Aquatic Toxicity Testing of Difficult Substances and Mixtures. OECD Environment, Health and Safety Publications, Series on Testing and Assessment No. 23.

(13) Environment Canada. (1995). Guidance Document on Measurement of Toxicity Test Precision Using Control Sediments Spiked with a Reference Toxicant. Report EPS 1/RM/30. September 1995.

(14) OECD Test Guideline 207. (1984). Earthworm, Acute Toxicity Test.

(15) Suedel, B.C. and J.H. Rodgers. (1994). Development of formulated reference sediments for freshwater and estuarine sediment testing. Environ. Toxicol. Chem. 13:1163-1175.

(16) Naylor, C. and C. Rodrigues. (1995). Development of a test method for Chironomus riparius using a formulated sediment. Chemosphere 31:3291-3303.

(17) Dunnett, C.W. (1964). A multiple comparisons procedure for comparing several treatments with a control. J. Amer. Statis. Assoc., 50: 1096-1121.

(18) Dunnett, C. W. (1964). New tables for multiple comparisons with a control. Biometrics, 20: 482-491.

(19) Williams, D. A. (1971). A test for differences between treatment means when several dose levels are compared with a zero dose control. Biometrics, 27: 103-117.

(20) Williams, D.A. (1972). The comparison of several dose levels with a zero dose control. Biometrics, 28: 510-531.

(21) Rao, J.N.K. and A.J. Scott. (1992). A simple method for the analysis of clustered binary data. Biometrics 48:577-585.

(22) Christensen, E.R. 1984. Dose-response functions in aquatic toxicity testing and the Weibull model. Water Research 18, 213-221.

(23) Bruce and Versteeg 1992, A statistical procedure for modelling continuous toxicity data. Environmental Toxicology and Chemistry 11:1485-1494.

(24) Slob, W. 2002. Dose-response modelling of continuous endpoints. Toxicol. Sci., 66, 298-312.

ANNEX 1

DEFINITIONS

For the purpose of this guideline the following definitions are used:

Formulated sediment or reconstituted, artificial or synthetic sediment, is a mixture of materials used to mimic the physical components of a natural sediment.

Overlying water is the water placed over sediment in the test vessel.

Interstitial water or pore water is the water occupying space between sediment and soil particles.

Spiked sediment is sediment to which test substance has been added.

ANNEX 2

RECOMMENDATIONS FOR CULTURE OF *CHIRONOMUS RIPARIUS*

1. *Chironomus* larvae may be reared in crystallising dishes or larger containers. Fine quartz sand is spread in a thin layer of about 5 to 10 mm deep over the bottom of the container. Kieselgur (e.g. Merck, Art 8117) has also been shown to be a suitable substrate (a thinner layer of up to a very few mm is sufficient). Suitable water is then added to a depth of several cm. Water levels should be topped up as necessary to replace evaporative loss, and prevent desiccation. Water can be replaced if necessary. Gentle aeration should be provided. The larval rearing vessels should be held in a suitable cage which will prevent escape of the emerging adults. The cage should be sufficiently large to allow swarming of emerged adults, otherwise copulation may not occur (minimum is ca. 30 x 30 x 30 cm).

2. Cages should be held at room temperature or in a constant environment room at 20 ± 2 °C with a photo period of 16 hour light (intensity ca. 1000 lux), 8 hours dark. It has been reported that air humidity of less than 60 % RH can impede reproduction.

Dilution water

3. Any suitable natural or synthetic water may be used. Well water, dechlorinated tap water and artificial media (e.g. Elendt "M4" or "M7" medium, see below) are commonly used. The water has to be aerated before use. If necessary, the culture water may be renewed by pouring or siphoning the used water from culture vessels carefully without destroying the tubes of larvae.

Feeding larvae

4. *Chironomus* larvae should be fed with a fish flake food (Tetra Min®, Tetra Phyll® or other similar brand of proprietary fish food), at approximately 250 mg per vessel per day. This can be given as a dry ground powder or as a suspension in water: 1.0 g of flake food is added to 20 ml of dilution water and blended to give a homogenous mix. This preparation may be fed at a rate of about 5 ml per vessel per day. (shake before use.) Older larvae may receive more.

5. Feeding is adjusted according to the water quality. If the culture medium becomes ‘cloudy’, the feeding should be reduced. Food additions must be carefully monitored. Too little food will cause emigration of the larvae towards the water column, and too much food will cause increased microbial activity and reduced oxygen concentrations. Both conditions can result in reduced growth rates.

6. Some green algae (e.g. *Scenedesmus subspicatus*, *Chlorella vulgaris*) cells may also be added when new culture vessels are set up.

Feeding emerged adults

7. Some experimenters have suggested that a cotton wool pad soaked in a saturated sucrose solution may serve as a food for emerged adults.

Emergence

8. At 20 ± 2 °C adults will begin to emerge from the larval rearing vessels after approximately 13 - 15 days. Males are easily distinguished by having plumose antennae.

Egg masses

9. Once adults are present within the breeding cage, all larval rearing vessels should be checked three times weekly for deposition of the gelatinous egg masses. If present, the egg masses should be carefully removed. They should be transferred to a small dish containing a sample of the breeding water. Egg masses are used to start a new culture vessel (e.g. 2 - 4 egg masses / vessel) or are used for toxicity tests.

10. First instar larvae should hatch after 2 - 3 days.

Set-up of new culture vessels

11. Once cultures are established it should be possible to set up a fresh larval culture vessel weekly or less frequently depending on testing requirements, removing the older vessels after adult midges have emerged. Using this system a regular supply of adults will be produced with a minimum of management.

Preparation of test solutions "M4" and "M7"

12. Elendt (1990) has described the "M4" medium. The "M7" medium is prepared as the "M4" medium except for the substances indicated in Table 1, for which concentrations are four times lower in "M7" than in "M4". A publication on the "M7" medium is in preparation (Elendt, personal communication). The test solution should not be prepared according to Elendt and Bias (1990) for the concentrations of $NaSiO_3$ 5 H_2O, $NaNO_3$, KH_2PO_4 and K_2HPO_4 given for the preparation of the stock solutions are not adequate.

Preparation of the "M7"-medium

13. Each stock solution (I) is prepared individually and a combined stock solution (II) is prepared from these stock solutions (I) (see Table 1). Fifty ml from the combined stock Solution (II) and the amounts of each macro nutrient stock solution which are given in Table 2 are made up to 1 litre of deionised water to prepare the "M7" medium. A vitamin stock solution is prepared by adding three vitamins to deionised water as indicated in Table 3, and 0.1 ml of the combined vitamin stock solution are added to the final "M7" medium shortly before use. (The vitamin stock solution is stored frozen in small aliquots). The medium is aerated and stabilised.

Reference

BBA (1995). Long-term toxicity test with *Chironomus riparius*: Development and validation of a new test system. Edited by M. Streloke and H.Köpp. Berlin 1995.

Table 1: Stock solutions of trace elements for medium M4 and M7

Stock solutions (I)	Amount (mg) made up to 1 litre of deionised water	To prepare the combined stock solution (II): mix the following amounts (ml) of stock solutions (I) and make up to 1 litre of deionised water		Final concentrations in test solutions (mg/l)	
		M4	M7	M4	M7
H_3BO_3 (1)	57190	1.0	0.25	2.86	0.715
$MnCl_2 \bullet 4\ H_2O$ (1)	7210	1.0	0.25	0.361	0.090
LiCl (1)	6120	1.0	0.25	0.306	0.077
RbCl (1)	1420	1.0	0.25	0.071	0.018
$SrCl_2 \bullet 6\ H_2O$ (1)	3040	1.0	0.25	0.152	0.038
NaBr (1)	320	1.0	0.25	0.016	0.004
$Na_2MoO_4 \bullet 2\ H_2O$ (1)	1260	1.0	0.25	0.063	0.016
$CuCl_2 \bullet 2\ H_2O$ (1)	335	1.0	0.25	0.017	0.004
$ZnCl_2$	260	1.0	1.0	0.013	0.013
$CoCl_2 \bullet 6\ H_2O$	200	1.0	1.0	0.010	0.010
KI	65	1.0	1.0	0.0033	0.0033
Na_2SeO_3	43.8	1.0	1.0	0.0022	0.0022
NH_4VO_3	11.5	1.0	1.0	0.00058	0.00058
$Na_2EDTA \bullet 2\ H_2O$ (1)(2)	5000	20.0	5.0	2.5	0.625
$FeSO_4 \bullet 7\ H_2O$ (1)(2)	1991	20.0	5.0	1.0	0.249

(1) These substances differ in M4 and M7, as indicated above.
(2) These solutions are prepared individually, then poured together and autoclaved immediately.

Table 2: Macro nutrient stock solutions for medium M4 and M7

	Amount made up to 1 litre of deionised water (mg)	Amount of macro nutrient stock solutions added to prepare medium M4 and M7 (ml/l)	Final concentrations in test solutions M4 and M7 (mg/l)
$CaCl_2 \bullet 2\ H_2O$	293800	1.0	293.8
$MgSO_4 \bullet 7\ H_2O$	246600	0.5	123.3
KCl	58000	0.1	5.8
$NaHCO_3$	64800	1.0	64.8
$NaSiO_3 \bullet 9\ H_2O$	50000	0.2	10.0
$NaNO_3$	2740	0.1	0.274
KH_2PO_4	1430	0.1	0.143
K_2HPO_4	1840	0.1	0.184

Table 3: Vitamin stock solution for medium M4 and M7

All three vitamin solutions are combined to make a single vitamin stock solution.

	Amount made up to 1 litre of deionised water (mg)	Amount of vitamin stock solution added to prepare medium M4 and M7 (ml/l)	Final concentrations in test solutions M4 and M7 (mg/l)
Thiamine hydrochloride	750	0.1	0.075
Cyanocobalamin (B12)	10	0.1	0.0010
Biotine	7.5	0.1	0.00075

References

Elendt, B.P. (1990): Selenium Deficiency in Crustacean. *Protoplasma* 154, 25-33

Elendt, B.P. & W.-R. Bias (1990): Trace Nutrient Deficiency in *Daphnia magna* Cultured in Standard Medium for Toxicity Testing. Effects on the Optimization of Culture Conditions on Life History Parameters of *D. magna*. *Water Research* 24 (9), 1157-1167

ANNEX 3

PREPARATION OF FORMULATED SEDIMENT

Sediment composition

The composition of the formulated sediment should be as follows:

Constituent	Characteristics	% of sediment dry weight
Peat	Sphagnum moss peat, as close to pH 5.5-6.0 as possible, no visible plant remains, finely ground (particle size ≤ 1 mm) and air dried	4-5
Quartz sand	Grain size: > 50% of the particles should be in the range of 50-200 μm	75-76
Kaolinite clay	Kaolinite content ≥ 30%	20
Organic carbon	Adjusted by addition of peat and sand	2 (±0.5)
Calcium carbonate	$CaCO_3$, pulverised, chemically pure	0.05 – 0.1
Water	Conductivity ≤ 10 μS/cm	30 – 50

Preparation

The peat is air dried and ground to a fine powder. A suspension of the required amount of peat powder in deionised water is prepared using a high-performance homogenising device. The pH of this suspension is adjusted to 5.5 ± 0.5 with $CaCO_3$. The suspension is conditioned for at least two days with gentle stirring at 20 ± 2 °C, to stabilise pH and establish a stable microbial component. pH is measured again and should be 6.0 ± 0.5. Then the peat suspension is mixed with the other constituents (sand and kaolin clay) and deionised water to obtain an homogeneous sediment with a water content in a range of 30–50 per cent of dry weight of the sediment. The pH of the final mixture is measured once again and is adjusted to 6.5 to 7.5 with $CaCO_3$ if necessary. Samples of the sediment are taken to determine the dry weight and the organic carbon content. Then, before it is used in the chironomid toxicity test, it is recommended that the formulated sediment be conditioned for seven days under the same conditions which prevail in the subsequent test.

Storage

The dry constituents for preparation of the artificial sediment may be stored in a dry and cool place at room temperature. The formulated (wet) sediment should not be stored prior to its use in the test. It should be used immediately after the 7 days conditioning period that ends its preparation.

References

OECD Guideline 207. (1984). Earthworm, Acute Toxicity Test.

Meller, M., P. Egeler, J. Rombke, H. Schallnass, R. Nagel and B. Streit. (1998). Short-term Toxicity of Lindane, Hexachlorobenzene and Copper Sulfate on Tubificid Sludgeworms (Oligochaeta) in Artificial Media. Ecotox. and Environ. Safety, 39, 10-20.

ANNEX 4

CHEMICAL CHARACTERISTICS OF AN ACCEPTABLE DILUTION WATER

SUBSTANCE	CONCENTRATIONS
Particulate matter	< 20 mg/l
Total organic carbon	< 2 mg/l
Unionised ammonia	< 1 μg/l
Hardness as $CaCO_3$	<400 mg/l*
Residual chlorine	< 10 μg/l
Total organophosphorus pesticides	< 50 ng/l
Total organochlorine pesticides plus polychlorinated biphenyls	< 50 ng/l
Total organic chlorine	< 25 ng/l

* However, it should be noted that if there is an interaction suspected between hardness ions and the test substance, lower hardness water should be used (and thus, Elendt Medium M4 must not be used in this situation).

ANNEX 5

GUIDANCE FOR MONITORING EMERGENCE OF CHIRONOMID LARVAE

Emergence traps are placed on the test beakers. These traps are needed from day 20 to the end of the test. Example of trap used is drawn below:

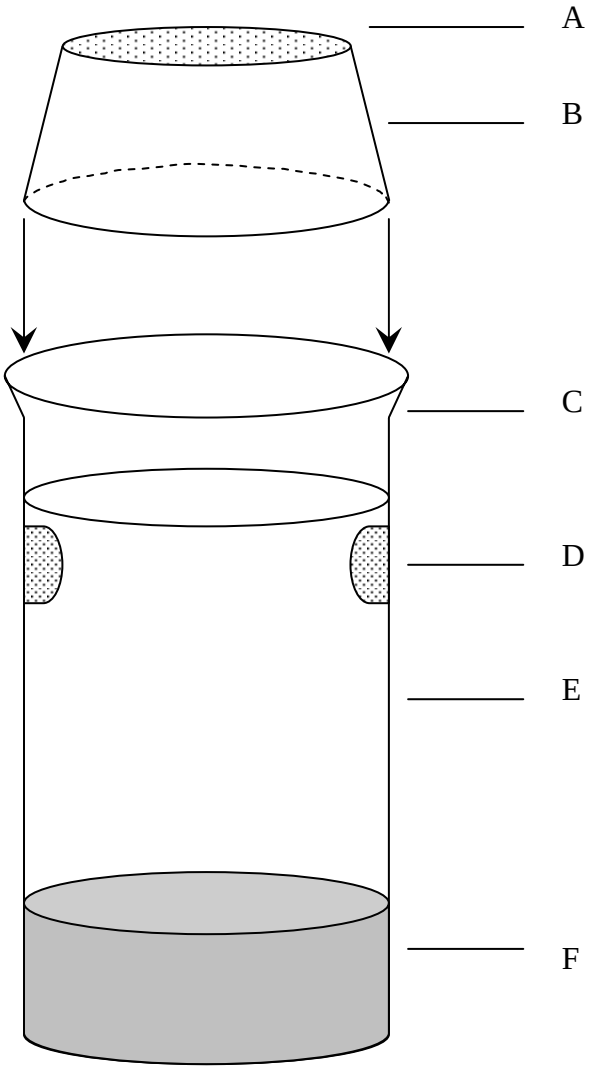

A: the nylon screen
B: the inverted plastic cups
C: the lipless exposure beaker
D: the water exchange screen ports
E: water
F: sediment

EXHIBIT 47

EUROPEAN COMMISSION
HEALTH & CONSUMER PROTECTION DIRECTORATE-GENERAL

Directorate E - Food Safety: plant health, animal health and welfare, international questions
E1 - Plant health

Sanco/3268/2001 rev.4 (final)
17 October 2002

Working Document

Guidance Document on Aquatic Ecotoxicology

in the context of the Directive 91/414/EEC

Table of Contents

1. INTRODUCTION **4**

1.1 Status and purpose of this document 4
1.2 Legislative background 5
1.3 Protection aims 5
1.4 Structure of this document 6

2. DATA REQUIREMENTS FOR ACTIVE SUBSTANCES AND FORMULATIONS AND THEIR USE IN STANDARD RISK ASSESSMENTS **8**

2.1 General issues in toxicity test design 8
2.1.1 Limit-tests 8
2.1.2 Poorly soluble substances 8
2.1.3 Analytical measurements 9
2.1.4 Calculation of test endpoints 9
2.1.5 Acceptable guidelines 10
2.2 Toxicity testing with fish 10
2.2.1 Acute toxicity tests (Annex II point 8.2.2) 10
2.2.2 Long-term/chronic toxicity tests (Annex II point 8.2.2) 10
2.2.3 Triggering of a fish bioconcentration study (Annex II Point 8.2.3) 13
2.3 Studies with aquatic invertebrates including sediment-dwelling organisms 13
2.3.1 Studies with Daphnia (Annex II point 8.2.4 and 8.2.5) 13
2.3.2 Studies with additional invertebrate species (Annex II point 8.2.4 and 8.2.5) ... 13
2.3.3 Available data on estuarine/marine invertebrates (Annex II point 8.2.4 and 8.2.5) 15
2.3.4 Tests with sediment-dwelling invertebrates (Annex II point 8.2.7) 16
2.4 Studies with Aquatic Plants (including algae and macrophytes) 18
2.4.1 Species for algae tests (Annex II point 8.2.6) 18
2.4.2 Aquatic macrophytes (Annex II point 8.2.8) 19
2.5 Study requirements for formulations (Annex III point 10.2) 20
2.5.1 Acute toxicity tests with the formulated product (Annex III point 10.2.1) 20
2.5.2 Microcosm and mesocosm tests (Annex III Point 10.2.3) 20
2.5.3 Chronic toxicity tests with the formulated product (Annex III Point 10.2.4) 21

3. EXPOSURE ASSESSMENT **23**

3.1 Exposure calculations and the implementation of FOCUS Surface Waters 23
3.1.1 Step 1 and 2 Calculations 23
3.1.2 Use of Step 1 and 2 in the Risk Assessment Process 24
3.1.3 Step 3 25
3.1.4 Step 4 25
3.2 Specific exposure scenarios 25
3.3 Use of time weighted concentrations (PECtwa) 26
3.4 Ecological significance of exposure estimates 27

4. STANDARD RISK ASSESSMENT **28**

5. HIGHER-TIER RISK ASSESSMENT **29**

5.1 Introduction 29
5.2 Higher-tier acute risk assessment 29
5.3 Reduction of the relevant uncertainty factor if data from additional single species tests are available 30
5.4 Design and conduct of higher-tier effects studies including microcosm and mesocosm studies (Annex III point 10.2.2) 30
5.4.1 Introduction 30
5.4.2 Microcosm 32
5.4.3 Mesocosm - outdoor multispecies tests 34
5.5 Risk assessment on the basis of higher tier data 39
5.5.1 Single species tests 39
5.5.2 Semi-realistic microcosm and mesocosm 39
5.6 Probabilistic Risk Assessment 40
5.7 Higher-tier risk assessment for compounds which have a considerable potential to bioaccumulate 41
5.7.1 Introduction 41
5.7.2 Direct long-term effects in fish 42
5.7.3 Secondary poisoning for birds and mammals 42
5.7.4 Biomagnification in aquatic food chains 42

6. METABOLITES 44

6.1 Introduction 44
6.2 Definitions 44
6.3 Potential routes of entry 45
6.4 Data Requirements 45
6.4.1 Fate section 45
6.4.2 Triggering of Aquatic Risk Assessments with Metabolites 46
6.5 Calculation of Metabolite PECsw 47
6.6 Requirements for Aquatic Organism Testing with Metabolites 48
6.7 Risk Assessment for Metabolites 50
6.8 Defining ecotoxicological relevance 50

7. RISK MANAGEMENT 51

8. OTHER ISSUES 52

8.1 Definition of ecotoxicologically significant residues – aquatic life (Annex VI, 2.6.2) 52
8.2 Animal experimentation 52
8.3 Endocrine Effects 52
8.4 Organisms dwelling in groundwater 53

9. REFERENCES 55

10. ANNEX 58

10.1 Annex 1 – Worked examples regards sediment-dwelling organisms 58
10.2 Annex 2 - Worked examples regards metabolites 59
10.2.1 Approach using SINCLAIR&BOXALL, 2002 59
10.2.2 Example from the Scientific Committee on Plants (SCP) 61
10.3 Annex 3: Testing requirements for active substances 62

1. Introduction

1.1 Status and purpose of this document

This document on aquatic ecotoxicology was conceived as a working document of the Commission Services and was elaborated in co-operation with the Member States (MS). It is intended to provide guidance for notifiers in the context of the review of active substances under Council Directive 91/414/EEC. It is not intended to prejudice the authority of MS in national authorizations. Further, this document does not preclude the possibility that the European Court of Justice may give one or another provision direct effect in MS.

The purpose of this document is to provide guidance both to regulatory authorities and notifiers on the interpretation of the aquatic ecotoxicology sections of Annexes II, III and VI. Its aims are to promote consistency and transparency, and to enhance the efficiency of the review process.

Tools and techniques in ecotoxicological risk assessment progress rapidly. It is noted that it can be difficult for both notifiers or applicants - as well as regulators - to take such progress fully into account in their dossiers and assessment reports during on-going reviews. To provide a reliable framework for the review process and to avoid undue delays, the current version of this guidance document should therefore only be used for the review of existing active substances notified in the third phase of the review programme according to Regulation 451/2000[1] and subsequent phases. For new active substances, the document should be implemented with dossiers submitted from 1 August 2003. However, some flexibility may still be necessary during a transitional period. It will not always be possible to submit calculations and assessments according to the FOCUS surface water scenatrios within the timelines forseen. Decision making should also take into consideration that certain data requirements (e.g. full fish life cycle studies) which are now triggered, may not have been obvious to applicants or notifiers at the time of their notification or dossier submission. Likewise, if this appears justified in individual cases and facilitates decision making, the updated guidance may be considered also for substances submitted in earlier phases of the review programme.

Throughout the document, reference is made to reports from workshops or other scientific meetings. These are provided for information and should be used if appropriate. Also the Scientific Committee on Plants (SCP) has provided important guidance related to aquatic ecotoxicology in its opinions on individual substances and on a previous revision of this guidance document (SCP 1999[2]).

1 OJ L 55, 29.02.2000, p.25
2 http://europa.eu.int/comm/food/fs/sc/scp/outcome_ppp_en.html

1.2 Legislative background

Annexes II Section 8 and Annex III Section 10 of Directive 91/414/EEC set out the data requirements on ecotoxicolgy for the inclusion of an active substance onto Annex I of the Directive and for the authorisation of a plant protection product at MS-level. It should be noted that the introduction to both these sections provide useful information on the purpose and use of data submitted. Annex VI of the Directive includes the decision-making criteria for the authorisation of plant protection products at MS-level. Given that no other harmonised criteria are currently available, Annex VI should also be used in an appropriate way to decide whether Annex I listing of an active substance can be recommended. Over the last few years, issues related to aquatic ecotoxicology have been discussed at various meetings in the context of Directive 91/414/EEC. Several points of Annexes II, III and VI were identified during these discussions where expert judgement is required or where there is scope for different interpretation. This document attempts to address these issues.

It is clear that the data submitted must be sufficient to permit an assessment of the impact on non-target species. In order to fulfil this objective, tests additional to those outlined in Annex II and III may be needed in individual cases if there is a specific justification.

1.3 Protection aims

Any environmental risk assessment has two prerequisites:

- Definition of suitable assessment endpoints which are understood as formal expressions of the environmental values to be protected (SUTER 1993),
- Establishment of a certain level of protection which encompasses the acceptability of effects and the uncertainty linked to the prediction of effects.

The protection of species is a relevant assessment endpoint but difficult to evaluate and therefore not appropriate as a measurement endpoint. Due to the complexity of the matter, particularly when biodiversity issues are included, there are no agreed proposals on these points either in the scientific or in the regulatory community. In general, the sustainability of populations of non-target organisms should be ensured. Structural and functional endpoints should be regarded of equal importance.

Within the context of sustainability of our freshwater resources, the following unacceptable effects of contaminants are mentioned by Brock & Ratte (2001; see CLASSIC document) and should be considered when deciding about the acceptability of risk to non-target aquatic organisms. The reader is referred to the aforementioned paper for additional guidance:

Decrease in biodiversity
This concerns negative effects on:
- *Overall species richness and densities*

This may be expressed as the number of taxa, diversity indices (or scores of multivariate techniques) for the total community or for taxonomic or functional groups.
- *Population densities of ecological key species*

Ecological key species are species that play a major role in ecosystem performance, productivity, stability, resilience, e.g.,
- species that are critical determinants in trophic cascades (e.g. piscivorous fish; large cladocerans)
- species which are "ecological engineers" i.e., those that have a large influence on the physical properties of habitats (e.g. rooted submerged macrophytes)
- *Population densities of indicator species*

- species with a high "information" level for monitoring purposes
- species protected by law and regionally rare or endangered species

Impact on ecosystem functioning and functionality
This concerns negative effects on:
- *Water quality parameters (e.g. increase of toxic algae; oxygen depletion)*
- *Harvestable resources (e.g. fish)*

Decrease in perceived aesthetic value or appearance of the water body
- Disappearance of species with a popular appeal (e.g. dragonflies; waterlilles)
- Visual mortality of individuals of fish, frogs, water fowl and other vertebrates
- Symptoms of eutrophication (e.g. algal blooms)

In a limited number of cases, the use pattern of the compound includes direct application of the plant protection product into aquatic systems (e.g. in-crop areas like rice paddies or aquatic weed control uses). In these cases, unacceptable impacts on ecological function instead of biodiversity parameters should be the main consideration when effects on aquatic systems are assessed. For uses in rice, the relevant guidance document should be considered ("Guidance document on data requirements for active substances used in rice." SANCO/10/90/2000, in preparation).

1.4 Structure of this document

The document is divided into eight sections as follows:
1. Introduction
2. Data requirement: This section provides further information on the basic data requirements for an active substance and associated formulated product.
3. Exposure assessment: This section provides an outline of the exposure assessment (including consideration of the new FOCUS surface water exposure assessment methods; FOrum for the Co-ordination of pesticide fate models and their USe) that should be considered when carrying out a risk assessment.

4. Standard risk assessment: The preliminary risk characterization which permits identification of potential issue areas for further assessment.
5. Higher tier risk assessment: This contains possible approaches for higher-tier risk assessment.
6. Metabolites: This section provides an outline of the data requirements and exposure estimates required to enable an assessment for metabolites.
7. Risk management: This section provides information on a range of possible risk management options.
8. Other issues: This section contains general issues which are difficult to incorporate into other sections.

Where possible, the document provides examples which are aimed to help with interpretation of the recommendations.

2. Data requirements for active substances and formulations and their use in standard risk assessments

2.1 General issues in toxicity test design

2.1.1 Limit-tests

In principle, toxicity tests should be of a dose-response design. However, it is sometimes impractical to test at concentrations as high as those that are required for classification purposes. Furthermore, such high concentrations are often of limited relevance to the concentrations used in the risk assessment (which are generally considerably lower than the limits for classification). Whilst in some OECD guidelines a limit is given regarding a single maximum concentration to be tested, in others there are no such recommendations. Consequently further guidance on what is reasonable is needed in some cases.

For active substances and formulated products, concentrations up to 100 mg/l should be tested where no effects are determined at lower concentrations, and if no other recommendations are given in the annexes, the relevant OECD guidelines, or in this guidance document. This limit is consistent with other EU-regulations, and permits hazard classification and labelling of active substances and products.

If studies with metabolites are triggered (see Section 6), in principle the same limit as for active substances applies if the metabolite can easily be synthesised. For metabolites which are difficult to synthesise, a lower limit e.g. 10 mg/l would be acceptable. In special cases, acceptable limit concentrations will be considered to be those where the limit concentration tested is more than 1000 times the Predicted Environmental Concentration (PEC).

If older limit tests are available where the test concentration is lower than 100 mg/l, it may be necessary to repeat the study if the test result is directly relevant for the risk assessment (i.e. the test organism concerned is the most sensitive endpoint).

2.1.2 Poorly soluble substances

For poorly soluble substances, limit concentrations lower than 100 mg/l may also be acceptable (see “Draft-OECD Guidance Document on Aquatic Toxicity Testing of Difficult Substances and Mixtures”, OECD series on testing and assessment No 23, December 2000). Precipitation of the substance in the test medium should be avoided because data generated under these circumstances are usually highly variable. They may also over- or underestimate the toxicity of the compound when it is in solution or is reasonably well-dispersed in the test medium. It is generally not sufficient to test the maximum water solubility of the substance because this is usually determined in studies with pure water under sterile conditions. Attempts should be made to reach the maximum solubility level expected under the test conditions, using either an appropriate solubilizer, auxilary solvent or dispersing agent. For some compounds, the solubility in pure water is likely to be higher than in standard test media as this

already contains dissolved material. If, on the basis of these results a potential risk is identified (from the appropriate toxicity exposure ratio (TER)), further testing may be necessary. If the compound is very difficult to work with, there should be further discussions with the Rapporteur Member State (RMS) or another competent authority. Studies on the formulated product might also be an appropriate way to deal with poorly soluble compounds especially if no effects occur at the solubility limit. Another option is t to conduct tests in water-sediment systems (see section 5.4.2.1).

2.1.3 Analytical measurements

Annex II and III require biological testing to be supported by chemical analysis. The purpose of these measurements is to confirm that the organisms were exposed at the desired concentrations. In general, the recommendations of the relevant OECD-guidelines are reasonable and should be considered. In the case of flow-through tests, additional analytical measurements should be conducted between start and the end of a study. At least three test concentrations should be measured (usually the lowest, the middle and the highest) at the beginning and the end of the test. In long-term tests, measurements should be conducted at several timepoints between the study start and finish. In semi-static tests, the “new” and “old” test media must be analysed. For unstable compounds, substances which adsorb to glassware, or where the maximum water solubility lies in the range of test concentrations, it is usually necessary to conduct additional measurements to confirm the exposure concentrations.

For older studies that do not have appropriate analytical measurements , it may be necessary to repeat the study if the test result is directly relevant for the risk assessment (i.e. the test organism concerned is the most sensitive endpoint).

2.1.4 Calculation of test endpoints

Toxicity endpoints (LC/EC50, NOEC, etc.) should usually be calculated using nominal concentrations. This is because nominal concentrations are the most suitable for calculating TER values with maximum predicted environmental concentrations (PECmax). In studies where the initial measured concentrations are < 80 % or > 120% of the nominal, toxicity values should be presented as measured initial concentrations. These can then be used in the risk assessment in the same way as nominal concentrations. This approach is especially relevant for static tests.

If the measured concentrations are < 80 % or >120 % of nominal ones during the test, toxicity values should be presented additionally as measured concentrations and the mean measured concentration for the relevant test period should be used to express toxicity. If the measured concentrations are very low compared to nominal ones, the validity of the test might be questionable, and a justification for using such study should be required. In short summary, the following rules apply in general:

- if measured concentrations are > 80 %, then the nominal concentration can be used to express toxicity,
- if initial measured concentrations are < 80 %, then toxicity values should be expressed as initial measured concentrations,

- if measured concentrations in semi-static and flow-through systems fall graduately below 80 % during the test, then toxicity values should be expressed as mean measured concentrations.

2.1.5 Acceptable guidelines

Tests conducted in accordance with internationally-recognised guidelines (even if not specifically recommended in the Annex II or III) can be accepted if the guideline is comparable with those guidelines mentioned in Annex II or III. Tests with species mentioned in the aforementioned guidelines are in principle acceptable, although not all species are indigenous in Europe. It is the responsibility of the notifier to identify which annex points the data are intended to cover, to address any relevant deviation from the guideline specified in the annexes, and to justify why the data should be accepted.

In general, the notifier should submit all available data which may be relevant for decision making, although studies from the published literature often lack detailed description. If the notifier wishes to uses data from published literature or other sources to fulfil data requirements outlined in Annex II or III, then these can only be considered if a clear description of the method and a detailed presentation of the results are provided. Information on the specification of the test material used and Good Laboratory Practice (GLP) status of the facility which performed the study should be provided. The onus is on the notifier to justify why such data should be accepted.

2.2 Toxicity testing with fish

2.2.1 Acute toxicity tests (Annex II Point 8.2.2)

According to Directive 91/414/EEC acute toxicity data are always required for rainbow trout (*Oncorhynchus mykiss*) and a warm water fish species.

2.2.2 Long-term/chronic toxicity tests (Annex II Point 8.2.2)

Annex II point 8.2.2 state that a chronic (long-term) toxicity study must be carried out unless it can be justified that continued or repeated exposure is unlikely to occur. Long-term/chronic tests are important as they are the only measure of sub-lethal effects.

The definition of ‘continued’ exposure is important in order to decide whether long-term/chronic studies are required. A long-term/chronic test should be required if the DT50 from the water-sediment study for the concentration of parent compound in the water column is ≥ 2 days at an environmentally relevant pH in the range of 6 - 9. In practice, this means that chronic data are nearly always required. It should be noted, that short-term exposure may lead to sublethal effects which are not covered by acute toxicity testing. If there are such concerns, in special cases further evaluations might be needed (see section 5.4.2.1).

Multiple applications of a plant protection product could potentially lead to ‘repeated’ exposure. If the proposed use of an active substance involves more than one application per season, long-term/chronic toxicity data are required, unless the DT50 in the water phase is < 2 days and the notifier has clearly demonstrated that due to the length of the spraying interval, prolonged exposure will not occur. Where such conditions apply, the potental risk from repeated acute exposures should be addressed in the assessment report on a case by case basis.

Annex II Point 8.2.2 states that expert judgement is required to decide which test should be performed (test in accordance with OECD 204, 210, 215 or a fish full life-cycle (FLC) -test).

There are some reservations concerning the OECD guideline 204 (fish extended mortality test) because mortality is the only endpoint covered, and the exposure duration may only be 14 days. Furthermore, the developmental stage tested is not particularly sensitive. However, studies which have been conducted in accordance with this guideline in recent years usually include exposure for 21 days, with mortality, growth and behaviour as endpoints. In addition, the developmental stage of the rainbow trout to be tested is the same as recommended in the OECD guideline 215 for the ‘Juvenile Growth Test’, given that the weight of a 5 cm long rainbow trout (OECD 204) is in the range of 1 - 5 g (OECD 215). A combination of both guidelines is therefore considered most appropriate. Hence, the study should have a 28 day exposure duration and include survival, growth and behaviour as endpoints. In order to avoid unjustified animal testing, existing valid studies conducted in accordance with OECD 204 but lasting only 21 days can also be used to fulfil the data requirement.

For some active substances, the submission of data in accordance with Annex II Point 8.2.2.1 might not be sufficient to fully address the need for chronic toxicity data in order to complete the risk assessment. In these cases, the need for a fish early life stage toxicity (ELS) -test or a FLC-test should be considered. Guidance is provided in Annex II Point 8.2.2. on when such data should be required.

The trigger value of < 0.1 mg/l (acute LC50 for the active substance) stated for the ELS-test should also apply to the FLC-test. FLC-tests may be required where the BCF is >1000, the elimination during the 14 day depuration phase in the bio-concentration study is <95% or the substance is stable in water or sediment (DT90 >100 days). However, taking into account that this type of study is difficult to conduct and often the results do not differ significantly from the ELS-test, the FLC-test may not be required if only one or two out of the toxicity, bio-accumulation and persistence triggers are breached. If all three triggers are breached the test should be required. If effects on reproduction or the endocrine system could be anticipated (e.g. based on data from mammalian toxicology studies), the need for a FLC-test should should carefully considered (see section 8.3).

Annex II Point 8.2.2 also states that chronic toxicity studies are not required if ‘a suitable microcosm or mesocosm study is available’. It should be noted though that

microcosm or mesocosm tests do not usually include the endpoint of chronic toxicity to fish. However, where valid fish data from a microcosm study (e.g. survival, growth, and behaviour) or mesocosm study (e.g. free living, reproduction data) are available then these may fulfil the requirement for data under Annex II Point 8.2.2.

2.2.3 Triggering of a fish bioconcentration study (Annex II Point 8.2.3)

A log P_{ow} > 3 should be used as a general trigger to require a fish bioconcentration study as stated in Annex II. Annex II also states that where it can be justified that exposure leading to bioconcentration is not likely to occur, a study is not necessary. Where bioconcentration is not expected because a substance is not stable in water, the study should not be required. This reflects the requirements of OECD 305 which is only considered suitable for 'stable' organic substances. Consequently, where the DT90 in the whole system is < 10 days (as determined in a water-sediment study), a fish bioconcentration study should not be necessary, unless the proposed use of the active substance includes multiple applications at intervals short enough to result in significant long-term exposure.

2.3 Studies with aquatic invertebrates including sediment-dwelling organisms

2.3.1 Studies with Daphnia (Annex II Point 8.2.4 and 8.2.5)

Under Directive 91/414/EEC, *Daphnia* is used as a representative invertebrate. Acute toxicity data are always required, and chronic data are also required if there is continued or repeated exposure to be expected. Chronic data are therefore required for compounds that are applied more than once per season, or for those whose dissipation rate (DT_{50}) in water is greater than or equal to 2 days (see Section 2.2.2). In practice, this means that chronic data are nearly always required. It should be noted that short-term exposure may lead to sublethal effects which are not covered by acute toxicity testing. If there are such concerns in special cases further evaluations might be needed (see Section 5.4.2.1).

In the preliminary risk assessment, uncertainty factors of 100 and 10 are applied to acute and chronic endpoints respectively to account for potential inter-species differences in invertebrate sensitivity and other sources of uncertainty. *Daphnia* is used as a representative invertebrate because of its ease of culture and testing, the availability of international acute and chronic guidelines (OECD 202 and 211), and its sensitivity to toxicants. A recent review paper (WOGRAM & LIESS, 2001) has clearly demonstrated that for organic chemicals including a range of pesticides, *Daphnia magna* is usually among the most sensitive species. Even when there are more sensitive groups, these are generally less than an order of magnitude more sensitive than *Daphnia*. The Annex VI trigger values for further assessment have also been validated in a major review study by BROCK *et al.* (2000 a and b) which compared sensitive endpoints from laboratory studies with insecticides and herbicides to the results of field studies. For these compounds, the Annex VI trigger values were clearly demonstrated to be protective for invertebrates when comparing with the NOEC and LOEC values found in micro- and mesocosm studies.

2.3.2 Studies with additional invertebrate species (Annex II Point 8.2.4 and 8.2.5)

For certain uses or compounds, studies on additional aquatic invertebrate species may be a core data requirement (as opposed to their use in higher-tier assessments – see Section 5).

Annex II 8.2.5 indicates that there is a requirement for studies on gastropod molluscs and insects if continued or repeated exposure is likely to occur. However, in general this requirement is limited to chronic tests whereas acute test (see Section 8.2.4) with gastropods and insects are only required if direct uses in waterbodies are intended.

An accepted international guideline for a chronic test on gastropods is not available currently. Furthermore, gastropod molluscs are generally significantly less sensitive than *Daphnia* (see WOGRAM & LIESS, 2001). Consequently, for uses where a direct application is made to water, the notifier should make a reasoned case as to why gastropod mollusc data should not be required. This could include acute toxicity data demonstrating the relative sensitivity of molluscs to the active substance. A chronic study should only be required if continued or repeated exposure is to be expected.

For herbicides and fungicides, *Daphnia* acute and chronic toxicity data (with their associated uncertainty factors) are suitably representative for aquatic insects and other invertebrates. For insecticides however, it should be carefully considered whether additional data on aquatic insects are required. Whilst for most insecticides, *Daphnia* have been demonstrated to be representative (BROCK *et al*., 2000b), the toxicity of certain recent chemistries which have very specific, receptor-mediated modes of action (e.g. neo-nicotinoids) may not be well-represented by *Daphnia*. Information on the mode of action of insecticides (from efficacy and non-target arthropod data) should be considered before deciding whether testing on an insect species is required. If the toxicity of an insecticide to *Daphnia* is low (48 h EC_{50} > 1 mg/l, 21 d NOEC > 0.1 mg/l), this may indicate selectivity. An acute toxicity test should then be carried out with first instar (2-3 d old) *Chironomus riparius* (48 h water-only study). There is currently no guideline for such a study available and there is a need to generate it in due course, but in principle the tests should be conducted using similar methodologies as for *Daphnia*. The toxicity data from the most sensitive organism (*Daphnia* or *Chironomus sp*) should be used in the standard risk assessment for invertebrates and the usual triggers for further assessment applied. If a long-term/chronic study on insects is already available there is no need to require additionally an acute one.

If the 48h EC_{50} for *Chironomus sp* is at least ten times lower than the *Daphnia* 48 h EC_{50}, then a chronic study should also be conducted with *Chironomus sp* (see below). The provisions outlined in Section 2.1.1 apply for such tests. In these cases, the same triggers that are applied to *Daphnia* should be applied to the *Chironomus sp* data (*i.e.*,100 for acute toxicity, 10 for chronic toxicity to account for further potential differences in inter-species sensitivity of insects; see Section 4). These uncertainty factors may then be reduced by testing further species (see Section 5).

For insecticides which are insect growth regulators (*e.g.*, benzoyl ureas and similar classes), special consideration should also be given to the potential for effects on aquatic insects. Such compounds tend to have more pronounced effects over longer time periods than standard acute studies (due to their effect on moulting). Therefore, chronic studies with *Chironomus sp* should generally be conducted, unless it can be

clearly demonstrated that the onset of effects is rapid and that *Daphnia* are of similar sensitivity to chironomids.

2.3.3 Available data on estuarine/marine invertebrates (Annex II Point 8.2.4 and 8.2.5)

In some cases, data are available on estuarine/marine invertebrates (*e.g.*, *Mysidopsis bahia*, oyster embryo larval studies). At present, there is no requirement under Directive 91/414/EEC to perform these studies, but if data are available, they must be submitted and should be considered in the risk assessment. The notifier should make a reasoned case as to the relevance of data on estuarine/marine organisms to the risk assessment.

2.3.4 Tests with sediment-dwelling invertebrates (Annex II Point 8.2.7)

2.3.4.1 Introduction

Annex II point 8.2.7 states:

"Where environmental fate and behaviour data required in Annex II Section 7 report that an active substance is likely to partition to and persist in aquatic sediments, expert judgement should be used to decide whether an acute or chronic sediment toxicity test is required. Such expert judgement should take into account whether effects on sediment-dwelling invertebrates are likely by comparing the aquatic invertebrate toxicity EC50 data from Points 8.2.4 (acute) and 8.2.5 (chronic) with the predicted levels of the active substances in sediment from data in Annex III, Point 9 (Fate and behaviour in the environment)".

Additionally, Annex II Point 8.2.7 specifies *Chironomus* sp. (Insecta, Diptera, Chironomidae, Chironominae) as the required test organism to assess potential effects on sediment-dwelling organisms. Although the general triggering factors are identified, no trigger values are stated in Annex II and no testing guideline is specified. Further guidance on such triggering (taking into account partitioning, persistence, and potential for toxicity) and test methods is provided below.

2.3.4.2 Triggering of sediment toxicity tests with invertebrates

As indicated above, triggering for sediment studies should take into account the potential for exposure via the sediment, and potential for toxicity. For active substances, a test on sediment-dwelling organisms should be required if, in the water-sediment fate study (*e.g.*, OECD 308), >10% of applied radioactivity represented by the parent compound is present in the sediment at or after day 14, and triggers to identify potential risks to invertebrates for toxicity are met. For information on the triggering of sediment toxicity studies with metabolites or degradation products, see Section 6.6.3.

To prevent unnecessary testing with substances of low toxicity to invertebrates, the NOEC in the chronic *Daphnia* test (or in a comparable study with insects when this group of organisms is more sensitive) must be < 0.1 mg/l for testing on sediment-dwelling organisms to be warranted. This number was chosen because on the basis of data from monitoring studies it is unlikely that higher concentrations will often occur in surface waters. Furthermore, the use of toxicity values from *Daphnia* tests as trigger for requiring tests on sediment-dwellers is mentioned in Annex II. A recent review that compared toxicity data for *Daphnia* with that for sediment-dwellers supports the aforementioned approach (STRELOKE et al. 2002, see also section 2.3.2).

For persistent substances (see EU-Guidance-Document 9188/VI/97), it may be justified to require a life-cycle test on chironomids to generate data on effects on reproduction. However, a standardized test method is not available, and there have only been a limited number of studies published in the literature.

For compounds which do not reach the “10 % trigger” but are applied more than once during the season, due consideration should be given to the potential for accumulation of residues in the sediment. Exposure triggers based on the water-sediment study are more difficult to apply to such use patterns because in the water-sediment study, typically only a single application is made. However, the development of the FOCUS Step 2 calculator (Step1_2 in FOCUS – see section 3) now permits a TER-based approach to triggering to be applied.

At FOCUS Step 2, as well as including drift, potential inputs from the soil compartment (via drainage/runoff) are included. The compound is partitioned between 30 cm depth of water and 5 cm depth of sediment, and is degraded. At Step 2, it is assumed that both the soil and water compartments experience no dilution, and that an equilibrium develops between the sediment and water compartments, with concentrations only influenced by degradation.

It is well-established that for non-polar organic compounds of log Pow up to 5 that in such a system at equilibrium, adequate predicitions of toxicity in sediment can be made from the concentration in the water phase (DI TORO *et al*., 1991). Because the FOCUS calculation partitions the compound between water and sediment and assumes that an equilibrium exists (worst-case because in nature dilution would be expected), the concentration in the water phase will reflect the ‘bioavailable’ concentration in the sediment. Consequently, using the appropriate water phase concentration, *Daphnia* toxicity data and the standard Annex VI triggers for invertebrates, it is possible to determine whether there is potential for sediment toxicity. Hence, if the TERs (based on the maximum exposure concentration at Step 2 from the ‘Step1_2 in FOCUS’ calculator) for *Daphnia* are less than 100 or 10 for acute or chronic endpoints, then testing of sediment dwelling organisms should be required, if the sediment exposure triggers are met. Some example calculations are included below (see Annex 1).

For insecticides where it is possible that *Daphnia* are not a representative test organism (see Section 2.3.2), acute toxicity data for *Chironomus riparius* can also be used to trigger long-term sediment studies. If the TER resulting from the maximum PEC at Step 2 and the *C. riparius* 48 h LC50 is less than 100, then long-term sediment testing is required, if the sediment exposure triggers are met.

2.3.4.3 Sediment-dwelling organism testing methods and endpoints

Although Annex II Point 8.2.7 specifies *Chironomus* sp. as the test organism, and survival and development (including emergence of adults) as endpoints, no further guidance is included on the type of study to be conducted. Two methods for testing sediment-dwelling organisms (in the presence of sediment) are available, both using *Chironomus* sp. The studies are quite distinct in that the first is a “spiked-sediment” toxicity test which expresses the results in terms of a concentration in the sediment (see draft OECD 218). The second is a “spiked water” toxicity test with sediment-dwelling organisms and expresses results in terms of a concentration in the water phase (see draft OECD 219).

There has been some debate about under which circumstances the “spiked water” or “spiked sediment” method is most appropriate. Data generated using either method should be judged on its own merits, although the spiked water test may be seen as providing a more realistic exposure scenario for most cases. However, data from spiked sediment studies can be particularly useful for addressing risks from exposure to contaminated sediment, particularly if there is an accumulation of the compound in the sediment over time (e.g., from multiple applications and/or via different exposure routes).

For sediment toxicity tests the concentrations in the pore water, the overlying water, and the sediment should be measured. There are some reservations with respect to the draft OECD 219 which includes the fact that analytical measurements in sediment are not routinely conducted. It can be argued that such analyses are not necessary if suitable data on the partitioning of the compound from a water-sediment study are available. In fact, studies with four radiolabelled substances showed that the partitioning in the water-sediment study and in the “spiked water” test with sediment-dwelling organisms should be comparable (STRELOKE&KOEPP, 1996). Therefore, reasoned cases which include estimation of likely levels in sediment, utilising data from the water-sediment study, may also be acceptable. In such situations, the notifier should demonstrate that the conditions in the water-sediment study are comparable to those in the “spiked water” test. The estimation of levels should include consideration of metabolites present in the sediment where this is relevant for the risk assessment. Additional analytical measurements in a study may sometimes be valuable to decide on the validity of a test and may help to avoid additional testing with living organisms.

NOEC values from “spiked water” studies that are expressed as initial concentrations in the water phase should be compared to initial PECs for the water column, and those from “spiked sediment” tests should be compared to PECs in sediment. Since both studies are long-term tests, the appropriate trigger for further evaluation is 10. If the trigger is not passed, a range of higher-tier studies are possible to further refine the risk assessment (see Section 5).

Toxicity to sediment-dwelling invertebrates may also be addressed in a suitably designed microcosm or mesocosm study.

2.4 Studies with Aquatic Plants (including algae and macrophytes)

2.4.1 Species for algae tests (Annex II Point 8.2.6)

A test with green algae is required in all cases. For herbicides, an additional test (conducted in accordance with internationally recognised guidelines) is required on a further algal species from a different taxonomic group. The second species should be from a group other than green algae, such as diatoms or the blue-green algae. Plant growth regulators should be treated in the same way as herbicides because they act on primary producers.

Comparisons between the endpoints growth rate and biomass have been made and came to the conclusion that biomass - or cell number – is usually the most sensitive endpoint (RATTE 1998; STAVELY 1999). Nevertheless both biomass and growth rate should be reported. As there is no clear evidence available to indicate which is the most relevant endpoint for the field situation the lower figure should be used in the risk assessment. Toxicity values should be based on the period of exponential growth.

2.4.2 Aquatic macrophytes (Annex II Point 8.2.8)

Annex II states that a test on higher aquatic plants (macrophytes) has to be performed for herbicides. Tests should be conducted with *Lemna* sp.. There is a suitable ASTM guideline, a draft OECD-guideline and an EPA guideline (draft OPPTS 850.4400) available, which should be used until the draft OECD guideline is finalized. Plant growth regulators should be treated in the same way as herbicides because they act on primary producers.

The number of fronds is the most important endpoint but if for example toxicity values for biomass or other endpoints are lower these may be used for the risk assessment if appropriate.

Where on the basis of the standard *Lemna* test a high risk to aquatic plants is identified (i.e. TER<10), the notifier should consider providing further information to demonstrate that the risk to higher aquatic plants is acceptable. It may be possible to obtain information on the mode of action, the importance of the different routes of exposure and the range of sensitivity from effects seen in terrestrial plant tests. Additional studies, using a range of aquatic plant species may be required for highly active compounds (see Section 5). Where the justification for an acceptable risk is based solely on a *Lemna* recovery study, the relevance to other aquatic plants which do not have the same capacity for rapid reproduction and/or for which the sediment route of exposure may be important, must be fully addressed.

If there is evidence from efficacy data or data on terrestrial plants that the data for *Lemna* are not representative for other aquatic plant species (e.g. auxin simulators which can be more toxic to submerged plants than for *Lemna*) additional data with other aquatic plant species may be required on a case-by-case basis. The test protocol for such studies should be discussed with the RMS or the competent authority because no internationally accepted guideline is available.

At present, laboratory toxicity methods with aquatic macrophytes taxa other than *Lemna* are at an early stage of development, and will require further research before it is possible to develop a harmonized guideline. A protocol using *Myriophyllum* is being developed. However, notifiers are advised to discuss the study design with the RMS.

2.5 Study requirements for formulations *(Annex III Point 10.2)*

2.5.1 Acute toxicity tests with the formulated product (Annex III Point 10.2.1)

Acute toxicity studies should not be required for every formulation. However, co-formulants and solvents in formulations may significantly increase or decrease the acute toxicity of the active substance and there is some difficulty in predicting which type of formulations are critical in terms of such interactions. If the formulated product contains more than one active substance, this also complicates the prediction of toxicity using data on the individual active substances to the extent that tests on such products are usually required. Acute toxicity data on a formulation also takes the toxicity of the co-formulants into account, as their toxicity will also be exerted in the tests.

If the active substance is more acutely toxic when it is formulated, TERs should be calculated on the basis of the data for the product (as stated in Annex III Introduction to Section 10 (vii)).

Annex III states that in principle, tests should be carried out on one species from each of the three groups of aquatic organisms (fish, aquatic invertebrates and algae). Where the available information on the active substance indicates that one group is clearly more sensitive, then tests on the most sensitive species of the relevant group should be carried out. In this context, the most sensitive group is defined as being at least 100 times more sensitive than the next most sensitive. If the least sensitive group is at least 100 times less sensitive than the most sensitive, then formulation data are not required on the least sensitive group. If the most sensitive species tested with the active substance is either *Lemna*, *Chironomus* or other species then these should be tested with the formulation. For poorly soluble chemicals, tests on the formulated product may be required for a group which does not show toxicity for the active substance at the solubility limit.

If the formulated product contains two or more active substances, and the most sensitive taxonomic groups for the individual active substances are not the same, formulation toxicity data are required on all three groups.

There is some scope for extrapolation of toxicity data between similar formulations. In addition, in some cases it may be possible to reliably predict the toxicity of a “simple” formulation from data on the active substance and information on the co-formulants. The notifier should justify such approaches in reasoned cases.

2.5.2 Microcosm and mesocosm tests (Annex III Point 10.2.3)

These data requirements are discussed in section 5. It should be noted that the data derived from microcosm and mesocosm tests although generated with formulated products are usually also most important for the evaluation of the active substance. Therefore in fact these data also pertain to Annex II.

2.5.3 Chronic toxicity tests with the formulated product (Annex III Point 10.2.4)

Annex III Point 10.2.4 states that laboratory chronic toxicity testing "may be required for particular plant protection products where it is not possible to extrapolate from data obtained in the corresponding studies on the active substance".

It is unclear, based on current knowledge, what criteria should be used to decide whether laboratory chronic toxicity data are necessary for a particular plant protection product. It can be argued that chronic formulation studies provide valuable information on sublethal effects from exposure to active substance andco-formulant interactions. However, further research and discussion is required on the fundamental question of whether formulations persist as formulations over longer time periods in freshwater ecosystems. At present, a refined chronic/prolonged exposure assessment cannot be carried out for a formulation as Annex III does not require a water-sediment study for formulated products. However, comparisons between the data from analytical measurements in the toxicity tests with the activesubstance and the formulated product may be helpful in deciding upon this question (see Section 3.3). Without a refined exposure estimate, a NOEC from a chronic formulation study can only be compared with the initial formulation PEC, which may lead to an overestimation of risk.

Even though some important areas are yet to be resolved, "day-to-day" decisions on the need for long-term/chronic data on specific formulations have to be made. The following guidance may be useful to address this issue case-by-case:

Long-term/chronic tests with the formulated product should be required for that group of organisms where the formulated active substance is more acutely toxic than the technical active substance by one order of magnitude or greater. Relevant information especially concerning the effect of specific coformulants on the fate and effects of the active substance could be required and used more routinely in the assessment. Further, the LC/EC50 in the acute test on fish or *Daphnia* with the formulated product must be <10 mg formulation/l. However, long-term/chronic tests with the formulated product are not necessary if continued or repeated exposure is not possible (see Section 2.2.2 and 2.3.1). Therefore, long-term/chronic toxicity data are not required if the notifier can clearly demonstrate that the formulation will not persist in natural water-sediment systems and that continued or repeated exposure will not occur.

In general, the same type of toxicity studies should be submitted as for an active substance. However, static tests may be more useful than flow-through studies as the former are slightly more relevant to the exposure which could occur in the field. An alternative is to conduct a specifically targeted microcosm study with the formulated product to address the long term risk.

There is scope for extrapolation of toxicity data between similar formulations. The Notifier has to justify such an approach in a reasoned case.

In the risk assessment, data from long-term/chronic tests with the formulated product should be used for TER calculations if these values indicate highest risk.

3. Exposure assessment

3.1 Exposure calculations and the implementation of FOCUS Surface Waters

The FOCUS Surface Water Scenarios Group was established in 1997 to redefine surface water exposure calculations for pesticide risk assessment in the EU. It was charged with developing a set of standardised modelling scenarios for drift and including drainage and runoff entry routes into surface water – a significant change to the *status quo*. The scenarios are based on a tiered sequence of exposure assessment *steps*, namely:

- Step 1 = Worst-case loadings.
- Step 2 = Worst-case loadings based on sequential application patterns (i.e. taking account of dissipation between applications).
- Step 3 = Realistic worst-case based on crop/climate scenarios (using realistic worst-case soils, topography, water bodies, climate, agronomy).
- Step 4 = Localised/regionalised risk assessment, including potential mitigation measures.

It should be noted that FOCUS is still under discussion and that the overview presented in this document might be amended subsequent to the finalization of the FOCUS report.

3.1.1 Step 1 and 2 Calculations

The scenario for the Step 1 and 2 calculations is a static ditch (no dilution from flowing water) of 30 cm water depth, and a 5 cm deep sediment layer is assumed with organic carbon content of 5% and bulk density 0.8 kg/l. A piece of software called “STEP1-2 in FOCUS” has been developed which allows the user to easily calculate Step 1 and 2 exposure values. Detailed documentation of the calculations is included with the software. A brief summary of the process is described below.

At **Step 1**, the application rate is assumed to be the maximum season’s usage applied as a single dose, unless the DT50 in water for the compound is less than a third of the interval between treatments. In this case, the use rate for a single application should be assessed because there is no possibility of accumulation of residues in the ditch. Spray drift input is derived from the drift data of the BBA and is assumed to occur at the 90th percentile (benchmark value), varying with crop type. Inputs for aerial applications were derived from the US Spray Drift Task Force. It is assumed that the distance between the edge of the crop and the water body are fixed at 1 m for row crops and 3 m for tall crops. Run-off/erosion and/or drainflow are included at Step 1 as a single fixed loading of 15% of the application rate which occurs on the day of application. Outputs from the calculator include the maximum PECs in water and sediment, and then actual and time-weighted average PECs through time. The PECmax is the maximum predicted environmental concentration in water or sediment that is estimated to occur during the time course of application or thereafter (i.e. taking into account that for more persistent compounds there may be an accumulation of residues in water or sediment).

For **Step 2** calculations, a number of refinements are included to make the scenario more reasonable. Applications are assumed to be made sequentially at the rates and intervals specified on the use label. Degradation and partitioning then occurs between applications. Spray drift is considered separately for each treatment date, but the percentile for individual drift inputs is adjusted so that the overall probability of drift represents the 90th percentile loading (i.e. individual events for multiple applications are less than the 90th percentile). Distances between crop and water are the same as at Step 1.

At Step 2, interception of the soil deposit is also included, and this varies dependent on crop type and growth stage. Appropriate interception values are provided for a large range of crop types. Four days after the last treatment, a percentage of the residue remaining on the treated field (determined using the soil degradation rate) is then added to the ditch as a run-off/erosion or drainage input and is added directly to the sediment layer of the ditch. The magnitude of this loss is dependent on season (autumn, spring or summer) and region (North EU (N EU) or South EU (S EU)). Outputs from Step 2 are similar to those at Step 1. Time-weighted average and actual concentrations with time are calculated on the basis of a 'rolling window' approach, i.e., the maximum PECtwa across the whole exposure period is used (not just the PECtwa after the last application). Because under some circumstances, the PECs resulting from a single application may be higher than those from a multiple application (principally because drift inputs decline with multiple applications), the PECs resulting from a single application are also always calculated. The higher of the two should then be used in the risk assessment.

3.1.2 Use of Step 1 and 2 in the Risk Assessment Process

Appropriate PECsw and PECsed values generated by Step1-2 in FOCUS can be used to compare to toxicity values to generate TER values. If a compound fails either Step, the next level of exposure assessment is triggered. If areas of concern are identified at Step 2, there is no option to mitigate the exposure concentrations, for example by the use of buffer zones. The user is then required to perform the appropriate Step 3 calculations.

The rationale for this is that the assumptions made at Step 2 still represent very much a worst-case scenario. Step 1 and 2 are designed to identify compounds which are clearly safe, not to accurately quantify realistic risks under field uses which can then be adjusted according to mitigative practice. It is therefore inappropriate to apply mitigation at Step 2. Compounds that fail at this stage should be investigated with the more refined tools at Step 3 which can then be appropriately mitigated at Step 4 if concerns are not resolved. Furthermore, although the modelling process at Step 3 is significantly more complex than at Step 2, the calculations will be greatly facilitated by the software that has been developed to aid the user to both select the correct scenarios and run the appropriate models.

3.1.3 Step 3

Full details of the Step 3 scenarios and modelling approaches are included in the FOCUS surface water report. In very brief summary, Step 3 includes six drainage and four runoff scenarios. Each scenario represents soil and climate combinations for areas of the EU which are considered to be potentially vulnerable to drainage or runoff inputs to surface water. There are one or two of three possible water bodies (pond, ditch or stream) associated with each scenario according to local conditions, and each has a set of environmental properties and associated crops. The use pattern of the compound determines which scenarios are run (a “wizard” is available to assist the user with this). For each scenario, drift inputs are calculated with a spray drift calculator based on the BBA spray drift data, drainage inputs (where appropriate) are modelled with MACRO, and runoff inputs (where appropriate) with PRZM. The fate of the compound in the various water bodies is modelled with TOXSWA which has been modified for FOCUS to include dynamic hydrology. The outputs from each scenario modelled are similar to those at Step 2.

3.1.4 Step 4

In principle, Step 4 can be regarded as a higher-tier exposure assessment step. This may include a variety of refinement options of different degrees of complexity covering risk mitigation measures (no mitigation options are considered appropriate prior to Step 4), refinement of fate input parameters, or regional and landscape-level approaches. By its nature, Step 4 will be a 'case-by-case' process, depending on the properties of the compound, its use pattern, and the areas of potential concern identified in the lower tier assessments. As such, there are no specific recommendations for the Step 4 process. Rather, some general guidance on the sorts of approaches that may be applied is available. Additional scenarios than those proposed by FOCUS can be considered for risk mitigation purposes. The scientific validity of these scenarios must be supported by data and must be accepted on EU-level in a comparable way as the FOCUS scenarios.

3.2 Specific exposure scenarios

As noted above, specific scenario for rice is under development (SANCO/1090/2000). Also specific mediterranean crops such as olive trees, citrus or vineyards may require special scenarios, which must be considered case by case if these are within the major use relevant for Annex I listing.

For indoor uses, notifiers should provide a rationale as to whether these uses would lead to an exposure of aquatic organisms. The rationale should address the potential contamination of surface waters through drainage, condensation (inside of glass) and rainwater (outside of glass) from these facilities, and the potential risk to sewage treatment processes.

Currently, no harmonized approaches are available to determine the exposure of surface waters to plant protection products via volatilisation or dry deposition.

Recently, a FOCUS group on atmospheric transport of plant protection products (FOCUS-AIR) has been established and future guidance produced by this group should be considered in evaluations.

3.3 Use of time weighted concentrations (PECtwa)

The first stage of the acute and chronic risk assessments should be based on the initial/maximum PEC values. If the chronic TERs calculated using the initial/maximum PEC are below the relevant triggers, it may be appropriate to refine the risk assessment using PECtwa values if an unrealistic exposure regime prevailed in the relevant toxicity test.

In deciding whether the use of a PECtwa values is appropriate, fate and behaviour data, and the toxicity profile of the active substance (e.g. time to onset of effects in toxicity studies) must be taken into account. The notifier should present the time to onset of effects for the relevant endpoints. It should be recognised that the use of a PECtwa may overlook effects that result from exposure that occurred early on in the exposure period. In general, the use of PECtwa values in the acute risk assessment for fish and aquatic invertebrates is not appropriate because their use may lead to an underestimation of the risk resulting from the initial period of exposure. However, the use of PECtwa values may be relevant for the algae risk assessment since the primary endpoint in the algae toxicity study is growth rate inhibition over the whole exposure period (i.e. a sublethal parameter), rather than percentage of dead or damaged cells at the end provided nominal concentrations are maintained throughout the test. It should be noted that since the algae study is a static test (potentially including degradation during the exposure period) the use of a PECtwa should only be warranted if exposure under more natural conditions is predicted to differ significantly from that in the toxicity test.

If PECtwa values are used, particular consideration must be made of the potential exposure from metabolites, as these would not be taken into account in a PECtwa for the parent compound. In addition, the implications of multiple applications on a PECtwa should be considered. To assess risks for water-column organisms, PECtwa values should be derived from the degradation and dissipation in/from the water phase in the water-sediment study, rather than the DT50 for the whole system. The water-sediment study used in PECtwa derivation must be relevant to conditions in the field (eg in terms of pH).

PECtwa values should be compared with nominal concentrations from toxicity tests if measured concentrations show that test levels have been satisfactorily maintained over the exposure period (i.e. >80% of the nominal concentration) and in the water-sediment study the concentration in the water column fell below 80 % of the nominal concentration. It is recognised that for some active substances, it is very difficult to maintain nominal concentrations throughout the exposure period, even in an acute toxicity study (e.g. due to rapid hydrolysis). In these cases where reliable mean measured concentrations cannot be determined, it may be appropriate to compare the

LC/EC50 based on nominal concentrations with the initial PEC. If a reliable mean measured concentration of < 80 % of nominal can be determined, but there is clear evidence from the water-sediment study that exposure in the relevant toxicity tests is still unrealistic, then the mean measured concentration should be compared with an appropriate PECtwa.

For unstable active substances, where the toxicity data for the formulated product are relevant for the risk assessment, the exposure assessment is usually unrealistic because a water-sediment study with the formulated product is not available and therefore the PECtwa cannot be calculated. In such cases, it is possible to use the DT50 from the water-sediment study with the active substance, provided that the data from the analytical measurements in the toxicity tests with the active substance and the formulated product are comparable. If the formulated product contains more than one active substance, then it might be reasonable to use the same approach for the most toxic and/or persistent component of the product.

The use of PECtwa may not be appropriate for use with endocrine disrupting compounds since these effects may result from relatively short periods of exposure at critical developmental periods.

3.4 Ecological significance of exposure estimates

Point (iv) of the Introduction to Section 10 of Annex III states that “the final PEC estimations are to be adapted according to the different groups of organisms taking in particular into consideration the biology of the most sensitive species”. Hence, the ECCO group ”Ecotoxicology” should make sure that the final PECs are appropriate in terms of the biology and ecology of the most sensitive group of organisms identified when conducting the risk assessment for aquatic organisms. In addition, the exposure regime used in the relevant toxicity test and the time of onset of effects therein should be taken into account when deciding on the most relevant PEC.

4. Standard risk assessment

Annex VI C 2.5.2.2 states that
"Where there is a possibility of aquatic organisms being exposed, no authorisation should be granted if the toxicity/exposure ratio for fish and *Daphnia* is less than 100 for acute exposure and less than 10 for long-term exposure, or the algal growth inhibition/exposure ratio is less than 10, or the maximum bio-concentration factor (BCF) is greater than 1000 for plant protection products containing active substances which are readily biodegradable or greater than 100 for those which are not readily biodegradable, unless it is clearly established through an appropriate risk assessment that under field conditions no unacceptable impact on the viability of exposed species (predators) occurs - directly or indirectly - after use of the plant protection product according to the proposed conditions of use".

For groups of organisms not specifically mentioned in Annex VI, the appropriate TER trigger values for related groups should be used for acute and chronic risk assessments. For example, assessments using data on insects (including *Chironomus* sp.) should use the trigger values specified for *Daphnia* (acute or long-term, whichever is more appropriate). Currently, the TER trigger value specified for algae growth inhibition is also be applied to higher aquatic plants and bacteria.

Toxicity values from the "spiked water" study with sediment dwellers should be compared to surface water PEC values. Data from the "spiked sediment" study should be compared with whole-sediment PEC values. Care should be taken to use an appropriate PECsw for multiple applications. If the study design did not reflect the intended application pattern, use of a total load PECsw can be appropriate with a single spiked study.

5. Higher-tier risk assessment

5.1 Introduction

The scope of this section is to elucidate the “unless” clauses of Annex VI (see section 4) and hence provide guidance on the types of studies that can be undertaken to try to determine if “no unacceptable impact” occurs when the plant protection product is applied according to the conditions of use. At the time that Annex III was written, outdoor microcosm and mesocosm studies were the only higher-tier aquatic studies for which international guidance was available. Since that time, there have been substantial developments in the area of higher-tier effects assessments, and a range of approaches and studies are now recommended which can be used to refine the effects assessment. Consequently, the trigger values mentioned in Annex III should not automatically trigger a microcosm or mesocosm study, but should trigger a higher-tier effects assessment.

5.2 Higher-tier acute risk assessment

A number of uncertainties must be addressed to extrapolate from single-species laboratory data to a multi-species ecosystem. According to the Technical Guidance Document for Chemicals (EUROPEAN COMMISSION, 1996) the following has to be taken into account when choosing the appropriate uncertainty factor:

- Intra- and inter-laboratory variation of toxicity data
- Intra- and inter-species variation of toxicity data
- Short-term to long-term/chronic toxicity extrapolation
- Extrapolation of mono-species laboratory data to field impact on ecosystems

Whilst there is substantial data that demonstrates the uncertainty described by to the first three bullet points for plant protection active substances, there are only a few, if any cases, that support the uncertainty mentioned in bullet point 4 (i.e. the same species is more sensitive in a mesocosm study than in a laboratory test). The first two bullet points are also pertinent to the uncertainty factor of 10 prescribed in Annex VI. The uncertainty factor of 100 is therefore in general necessary to cover the above mentioned uncertainty resulting from the extrapolation from short-term to long-term/chronic endpoints. Since the overall level of uncertainty is lower if chronic data are available, an uncertainty factor of 10 should be used for the chronic risk assessment according to Annex VI of directive 91/414/EEC. However, it should be noted that the contribution of each of the different factors influencing the overall uncertainty can not easiliy be quantified and may differ in the field of acute and chronic testing.

In rare cases where the acuteto chronic ratio (A/C ratio) is low and the same PEC is used for acute and chronic risk assessment, the acute risk may appear to be higher than the chronic risk due to the greater uncertainty factor that is applied to the acute

assessment. From a scientific point of view, this is not logical. In such cases, the real difference between acute and chronic toxicity is lower than was anticipated when setting general uncertainty factors. Under these circumstances, the use of a lower uncertainty factor than 100 in the acute risk assessment should be considered.

5.3 Reduction of the relevant uncertainty factor if data from additional single species tests are available

The testing of more species reduces the uncertainty of the risk assessment attributable to inter-species differences in sensitivity (see also Section 5.6). It therefore permits a reduction of the uncertainty factor that is applied to the lower-tier data. If a considerable number of additional species was tested in valid studies, then it is possible that the uncertainty factors that are applied to the lowest toxicity value could be lowered by up to an order of magnitude. However, the full order of magnitude reduction is likely only to apply to acute risk assessments, *e.g.*, Annex VI TER trigger for acute risk to fish and aquatic invertebrates.

5.4 Design and conduct of higher-tier effects studies including microcosm and mesocosm studies (*Annex III Point 10.2.2*)

5.4.1 Introduction

5.4.1.1 General considerations

Annex III states that where the TER_{acute} is < 100 for fish and *Daphnia*, less than 10 for alga or $TER_{longterm}$ is < 10 for fish and *Daphnia*, expert judgement should be used to decide whether a microcosm or mesocosm study is necessary. Extensive international guidance on possible higher-tier approaches are described in the proceedings of the HARAP (Campbell *et al*., 1999) and CLASSIC (GIDDINGS *et al*., 2002) workshops. Higher-tier laboratory studies have also recently been reviewed by BOXALL *et al.* (2001). The reader is referred to these documents for detailed discussions, examples and literature references. The design of studies for higher-tier aquatic effects assessment should always be carefully considered on a case-by-case basis, and should take into account the findings of the standard risk assessment.

The term “microcosm” can be used for small-scale studies, whereas the term “mesocosm” generally refers to larger outdoor tests. Microcosm studies can be an effective compromise between standard laboratory tests and mesocosm studies. Mesocosm studies can examine effects of pesticides on communities of organisms under simulated field conditions. The general relationship between data from standard laboratory tests and micro- and mesocosm studies for herbicides and insecticides is reported by BROCK et al. (2000 a and b). For fungicides, this relationship still needs to be assessed.

5.4.1.2 Defining endpoints from mesocosm and microcosm studies

The data from microcosm and mesocosm studies should be used to determine a number of endpoints which can then be used further in the risk assessment (e.g. to derive an ecologically acceptable concentration (**EAC**) – see below). For the relevant taxonomic groups in the study, a no observed effect concentration at the community level ($NOEC_{community}$) should be derived using appropriate statistical techniques (e.g. Principal Response Curves). In addition, NOECs for populations of relevant organisms should be reported ($NOEC_{population}$). Where there are effects at the community or population level, the time taken for recovery to occur should also be reported.

The $NOEC_{community}$, the $NOEC_{population}$ and the time taken for recovery should then be used to determine a no observed ecologically adverse effect concentration (**NOEAEC**). The NOEAEC is defined as being the concentration at or below which no long-lasting adverse effects were observed in a particular higher-tier study (e.g. mesocosm). No long-lasting effects are defined as those effects on individuals that have no or only transient effects on populations and communities and are considered of minor ecological relevance (e.g., effects that are not shown to have long-term effects on population growth, taking into account the life-history characteristics of the organisms concerned). Different recovery rates may therefore be acceptable for different types of organisms. The NOEAEC can therefore be higher than the $NOEC_{community}$ or $NOEC_{population}$. Thus, if at a single test concentration effects were determined but recovery occurs and the effect is considered of no concern for the ecosystem sustainability, that concentration should be used as NOEAEC. Different NOEAECs may be derived from a study depending on the protection aim (e.g. in-crop versus off-crop area).

When a NOEAEC is derived for a particular study, all of the NOECs that are lower than the NOEAEC must also be presented in order to facilitate interpretation. The lack of ecological relevance of these NOECs must also be justified.

The NOEAEC may be used for a direct comparison with the relevant PEC if uncertainty has been reduced considerably and the result from the study is relevant for overall decision making. However, this will require clear knowledge of all relevant endpoints and long-term effects. Otherwise an appropriate uncertainty factor should be applied leading to the EAC which was defined at the HARAP workshop ("An ecologically acceptable concentration was defined by the workshop as being the concentration at or below which no ecologically adverse effects would be expected. Depending on the type of study, this can be defined either directly (*e.g.* from semi-realistic multi-species or field studies) or through the application of appropriate uncertainty factors (*e.g.*, with additional single-species tests). Expert judgement is needed in the derivation of an EAC."). While the NOEAEC is study specific, the EAC is derived from an overall evaluation of a compound. In concept it is comparable to the Predicted No Effect Concentration (PNEC) defined for other chemical types in the EU framework (eg industrial chemicals, biocides, veterinary medicines, feed additives). However, there is not too much experience with the use

of the PNEC in higher-tier risk assessments and clearer differences might emerge in future. Therefore both terms should be used in parallel for the time being.

5.4.2 Microcosm

5.4.2.1 Studies with realistic exposure conditions

The environmental fate properties of a pesticide can be an important factor in the mitigation of risk under realistic environmental conditions. If dissipation is rapid, risk assessments based on toxicity studies performed under constant exposure conditions may overestimate potential risks. As a complementary approach to the PECtwa described above (Section 3.3), it is possible to simulate such fate dynamics experimentally in higher-tier studies. Initial indications of the potential influence of exposure on toxicity may be derived for some chemicals (principally those that readily hydrolyse or substantially adsorb) by comparing the results of static and flow-through toxicity tests for the same endpoint. If apparent toxicity is significantly less in static tests, then fate processes may significantly mitigate risks under natural conditions. Modified exposure studies are appropriate to address both acute and chronic concerns.

One approach to modified exposure studies is to alter the test system to allow a certain environmental fate process to take place, e.g., by the addition of sediment to the test system to simulate adsorption or degradation, or by exposing the test system to natural light conditions to simulate photolysis. In “fate simulation” studies the method used should be justified on the basis of its relevance to realistic environmental conditions.

Currently, no test guidelines are available for testing algae, *Daphnia*, fish and aquatic plants in water-sediment systems. However, there is some experience with tests on sediment-dwelling organisms. In general, the test organisms should be inserted before the test substance is applied. The test material should usually be applied to the water column of the water-sediment system, but other types of exposure might be reasonable for special purposes. Deviating exposure regimes should be used with care because data may only be related to a single use situation (see discussion on the CLASSIC workshop). In such cases, the protocol should be discussed with the competent authority. It is often advisable to determine sublethal endpoints, even if only acute exposure is expected to reduce uncertainty for such critical substances. Even a short-term exposure may lead to sublethal effects and this kind of uncertainty is especially relevant in connection with these type of higher-tier studies. The influence and sensitivity of parameters such as the composition of the sediment, the sediment to water ratio, suitable organic carbon content of the sediment, sediment depth, optimal performance of standard species in such tests systems are not yet well-understood.. Further work is needed to develop specific testing conditions which, on the one hand, are representative of environmental conditions and, on the other hand, ensure that the potential risk is not underestimated.

5.4.2.2 Microcosm - indoor multi-species tests

Indoor semi-realistic microcosms tests are experiments in systems that intend to represent natural assemblages of organisms characterised by several trophic levels and that, at least for the larger part, are constructed directly with samples of natural ecosystems. Species covering a wide range of sensitivities and biological diversity can be included. In general, indoor semi-realistic microcosms can include micro-organisms, planktonic, periphytic and benthic algae, zooplankton, meiofauna, macro-invertebrates and, when large enough, also macrophytes.

Many of the fundamental issues relating to semi-realistic laboratory microcosms also apply to equivalent outdoor studies in mesocosms.

There are several advantages of indoor semi-realistic laboratory microcosm tests over outdoor field tests:

- They can usually be run throughout the year. However, since they are constructed in part with samples from natural ecosystems, they closely depend on seasonal availability of biological material.
- There may be potential for a higher level of control over the experimental conditions when compared with an equivalent field system.
- Compared with outdoor studies, set-up costs can be less for tests in laboratory microcosms. However, for a given study design, costs for biological and chemical analysis are similar to outdoor studies.

There are a number of potential disadvantages of semi-realistic laboratory microcosms over larger outdoor mesocosms which should be considered in the selection of an appropriate risk assessment tool:

- They do not usually allow realistic population densities of large organisms (e.g., fish, newts, frogs and nymphs of larger insects). What is more, if these animals are allowed to be present in indoor semi-realistic laboratory microcosms, they can unduly disturb the test system.
- Long-term effects and recovery of species with complex life-cycles may be difficult to determine in indoor test systems.
- There is a lower level of field realism compared to outdoor tests because natural fluctuations in climatic conditions usually are not covered (although these can be simulated).
- The number of micro-habitats present in indoor test systems is usually limited.
- Adequate sampling without overly disturbing certain populations (e.g., macro-invertebrates and macrophytes) can be problematic. Free living macro-invertebrates, however, may be sampled by means of artificial substrates, identified alive, and returned again in the test system. The biomass of rooted macrophytes and the abundance of sediment-dwelling macro-invertebrates usually can be assessed in an adequate way at the end of the experiment only. An alternative approach might be the use of *in situ* bioassays with representatives of these organisms that can be sampled more frequently.

5.4.3 Mesocosm - outdoor multispecies tests

5.4.3.1 Introduction

Mesocosms offer the same advantages as microcosms, but in addition, they usually include a wider range of species and generally offer a greater potential to assess the response at the population and, especially, the community level. Furthermore, natural fluctuations in climatic conditions enhance the level of field realism. In particular, they enhance the probability of recovery of some species through e.g. colonization. Clearly, the individual concerns arising from the use of a substance must be investigated, and the test design must be tailored accordingly (on a statistically sound basis). However, there is also an argument for some standardisation of a microcosm and mesocosm study design in order to make data for different substances more comparable and ease the interpretation of results.

Mesocosm studies are useful in risk assessments when laboratory studies (lower- and higher-tier) indicate potential risks and they should be designed to test specific hypotheses about ecological effects. Mesocosm studies should focus on population-level and community-level effects in order to derive an NOEAEC.

5.4.3.2 Guidance on test methods

An exposure-response experimental design with replication is clearly preferred to ease data interpretation. If possible, this should include the maximum PEC. The selected concentrations should generally be based on the expected effects and not only on the PEC.

Previously studies have generally attempted to simulate field exposure ("simulation" approach). Studies where the chemical is uniformly dosed into the water ("toxicological" approach) are preferred. They are often more easily interpreted and can be extrapolated to a variety of risk assessment scenarios.

Application of the test substance should be made in the period between spring and midsummer when the communities are in their "growth" phases. Within this timeframe, species richness and abundance are usually most suitable, and the potential time available to observe rates of recovery is long.

Due to the density dependence of numerous ecological phenomena, the evolution of small and large systems will be different. For example, the species richness is frequently positively correlated with the size of an experimental system. Due to the relation between functional and structural properties of communities and food webs and the size of the system, the response of a mesocosm to the contamination by a toxicant is not independent of its size. Self-sustainability of the test systems should been taken into account (CAQUET et al., 2000). In particular, the size/complexity of the experimental system should be sufficient to:

- Ensure the development and reproduction of the organisms which are being studied,
- Give sufficient refuges to prey to avoid elimination by predators,

- Make the recycling of nutrients possible,
- Ensure potential functional redundancy.

The possibility of recovery may also depend on the size of the systems since large systems may be more resilient than smaller ones to toxicant effects.

In general, when constructing a mesocosm, efforts should be made to introduce all the functional groups. This includes primary producers and the various levels of consumers, avoiding introduction of top predators that may greatly influence the system. Studying fish in mesocosms can present difficulties and needs to be carefully considered. When the invertebrate community is the principal endpoint of the study, it is recommended that free-living fish are not included.

Macrophytes are an important structural and functional component of shallow aquatic ecosystems, and in general should be included in micro- and mesocosm studies that aim to simulate these environments. If macrophyte communities are to be the principal endpoint of the study, special efforts are required to establish a diverse and representative community. Efforts should be made to emphasise on the use of macrophyte species with relatively low growth potential, otherwise an experimental system might be deeply altered in their response to contaminants (see CAQUET et al., 2000).

The notifier should indicate the precise location of the experimental units, and information should be given on the respective location of control and treated systems. The presence of neighbouring natural ecosystems in the immediate vicinity of the experimental area should also be roughly indicated, if it influences the potential for recolonisation of the mesocosm.

The level of identification should be as high as scientifically justified or practically feasible (recognizing that there are constraints on species identification, especially for smaller species). Special efforts should be made for those groups that are identified in lower-tier studies as potentially the most sensitive.

Univariate statistical methods are recommended for investigating effects at the population level, and multivariate methods are recommended for describing community-level effects. The Principal Response Curve (PRC) method is a suitable multivariate technique designed to analyse microcosm and mesocosm tests (VAN DEN BRINK& TERBRAAK, 1999). The statistical treatment of data is very important and the use of the aforementioned multivariate technique is recommended to gain insight into the often complex changes in community structure over time and the possible relationship with treatment. However, the outcome of such evaluations should be carefully checked in the light of the raw data especially for the most sensitive endpoints.

5.4.3.3 Evaluation of test results

When reviewing the results of mesocosm studies, all groups and species should generally be considered of equal importance, as it is difficult to identify the 'key' species. Structural and functional endpoints are in general of the same importance. Species structure is usually the principal endpoint. Functional endpoints alone are not considered appropriate for protecting biodiversity which is the most important assessment endpoint. Therefore, in general, differences in species composition at the end of the study between treated test units and untreated controls, represent an effect unless these differences can be explained in terms of natural or incidental variations in population and community development.

It is important that a sufficient number of populations were present in the study to reach valid conclusions with respect to the most relevant uncertainty factor. Usually there are a few species available with high abundances for which univariate statistical methods can be used. A second group of species occurs usually with lower abundances but mainly the data for the controls give a conclusive picture on the occurrence of these species in the study. Furthermore, a tendency of increasing effects with higher concentrations is detectable or clearly no effects in all treatments. These species are also important and the data can be evaluated with multivariate techniques. They are also relevant for a decision upon the uncertainty factor. However, there is a third group of species which are scattered about controls and treatments randomly with highly diverging abundances. These species are usually not relevant for the decision on the most appropriate uncertainty factor.

It is particularly important to consider those groups of organisms which were identified as the most sensitive in the standard risk assessment. For certain taxa or endpoints, effects observed in a field study may be considered acceptable, if with appropriate expert ecological judgement, it is considered that they would not pose significant ecological risks to natural aquatic ecosystems. In general, to demonstrate an acceptable level of effect from a particular treatment regime there must be evidence that the treated system and controls are in a comparable state at the end of the study. Test duration should be long enough to be able to observe recovery.

For a rough orientation – and to facilitate communication in workgroups - on the overall level of concern related to aquatic ecotoxicology, the following guidance for assessment of effects can be used, which was developed by BROCK et al., 2000 b (see also section 1.3):

Class 1: "effect could not be demonstrated"

- no (statistically significant) effects observed as result of the treatment, and
- observed differences between treatment and controls show no clear causal relationship.

Class 2: "slight effect"

- effects reported in terms of "slight" or "transient" and/or other similar descriptions, and
- short-term and/or quantitatively restricted response of sensitive endpoints, and

- effects only observed at individual samplings.

Class 3: “pronounced short-term effect”

- clear response of sensitive endpoints, but total recovery within 8 weeks after the last application, and
- effects reported as “temporary effects on several sensitive species”, “temporary elimination of sensitive species”, “temporary effects on less sensitive species/endpoints” and/or other similar descriptions, and
- effects observed at some subsequent sampling instances.

Class 4: “pronounced effect in short-term study”

- clear effects (such as strong reductions in densities of sensitive species) observed, but the study is too short to demonstrate complete recovery within 8 weeks after the (last) application.

Class 5: “pronounced long-term effect”

- clear response of sensitive endpoints and recovery time of sensitive endpoints is longer than 8 weeks after the last application, and
- effects reported as “long-term effects on many sensitive species/endpoints”, “elimination of sensitive species”, “effects on less sensitive species/endpoints” and/or other similar descriptions, and
- effects observed at various subsequent samplings.

The following suggestions about the translation of effect classes into NOECs and NOEAECs may be considered. If only effects related to class 1 were observed, the NOEC and NOEAEC are the same which is not the case for effects belonging to the other classes. With respect to class 2 effects, a NOEC and a NOEAEC should be determined although the values should often be the same. There is a need to explain that effects occurred, but that these effects were regarded for some reasons as ecologically not adverse. For effects in class 3, a clear difference between the NOECand NOEAEC should be determined. A NOEAEC cannot be determined if effects belonging to class 4 and 5 were observed. Whilst for class 4 effects, it may be possible to use other tools (see below), to show that effects are acceptable, this could be very difficult for effects belonging to class 5.

Intrinsic recovery potential mainly relies on resting stages present in the treated system itself (e.g. resting eggs of Cladocera or rotifers, algal spores). The importance of this phenomenon will frequently be dependent on the duration of the pre-exposure period since resting stages are naturally produced when climatic conditions become unfavourable. Therefore, if the systems experienced one or more autumn-winter-spring cycle before treatment, the abundance would be greater than for recently built mesocosm. The precise “history” of the systems should therefore be indicated by the notifier. Effects may be considered of low ecological significance if recovery takes place in a given time period like 8 weeks, but this period should not be used as strict trigger because recovery depends very much on the life history of the species. Even if recovery is observed in a mesocosm study, the extent and rate of recovery has to be

considered in the context of natural aquatic systems and the proximity of unaffected sites to those affected.

Where recovery of a species is not observed, or is only incomplete in a mesocosm study, it is the responsibility of the data submitter to discuss this observation and explain how this relates to the likelihood of recovery in natural aquatic ecosystems. Furthermore, some species cannot recover in mesocosm studies simply because of the conservative study design (e.g. gammarids). It is recommended that additional tools (e.g. further laboratory studies) are used to address the remaining uncertainty. The replacement of species is not acceptable in general. But in some cases, the replacement of one species by another with a similar role in the ecosystem may be considered acceptable (e.g. for some algal species) if functionality is maintained and no further structural effects occur (e.g. no indirect effects on zooplankton). The replacement species, however, should have a similar function. For example a replacement of green algae by blue-green algae or photosynthetic-facultative flagellates is unacceptable. In any case, functional characterisation of mesocosms should be performed for a significant period of time since functionality may sometimes be maintained for a short-term period but may decrease later. The notifier has to provide clear evidence that the ecological function and community structure in the field situation is unlikely to be significantly affected. It is recommended that for all species affected in a mesocosm study, the likelihood of recovery under field conditions is fully addressed when evaluating the study results. All factors that may influence population/community recovery should be considered, and should include dispersal ability, life-history, breeding season, number of breeding attempts per season, abundance in the environment, spatial records, as well as the natural variability in population sizes and distributions.

Population-level evaluation of genetic properties should also be considered. Genetic variability is a matter of concern since spatially limited populations which develop in mesocosms may exibit significant differences in various characteristics (e.g. consanguinity, founding effects) as compared to natural populations of the same species. If the same experimental systems are used from one study to another, the case of selection of less sensitive genotypes cannot be excluded. In this case the evaluation of effects may be biased (underestimation of effects). Increased homozygoty may also alter the pattern of response of some species to pesticides. It is therefore recommended to replace sediment after an experiment before a new mesocosm study is started in the same testing facility.

Results of field studies should be accompanied by clear explanations as to why a given observed effect should be considered ecologically significant or acceptable when they are presented to regulatory authorities and that, wherever possible, such studies should be reviewed by groups of experts to provide the least-biased advice, although it is accepted that this may be difficult under current registration procedures. Connections could also be established with experts working in the field of biological conservation.

5.5 Risk assessment on the basis of higher tier data

5.5.1 Single species tests

The reason for conducting indoor single species tests even in water/sediment systems is usually to obtain more realistic toxicity values and not a reduction of the uncertainty factor. However in special cases if a considerable number of species was tested reductions are possible (see Section 5.3). Single species tests are usually not designed to address the potential for recovery.

5.5.2 Semi-realistic microcosm and mesocosm

Based on the experience with indoor semi-realistic microcosms so far, the uncertainty factors applied to results (i.e., NOEAEC, see section 5.4.1.2) of such tests need to be assessed on a case-by-case basis, taking into account the uncertainty and acceptability of the test. As an intermediate test, indoor semi-realistic microcosms may serve to highlight issues which need to be addressed in a future outdoor mesocosm test. Due to the generally smaller species diversity in indoor microcosms, pesticide-stress may lead to more or less exaggerated indirect effects, since in these less complex systems not all feedback mechanisms will take place that may dampen pesticide-stress in the field. In addition, more pronounced responses of sensitive populations may occur in indoor microcosm tests due to a slower dissipation of the pesticide from the water phase (eg, because of less-pronounced photodegradation) and the lower potential for natural recolonisation of eliminated populations. Nevertheless, indoor semi-realistic microcosm tests may be used to define an overall ecosystem effect level. There is, however, a need to define an NOEAEC and the subsequent EAC using expert judgement, as is the case for field studies.

It may be appropriate to compare an NOEAEC directly with the PEC, provided all the uncertainty has been satisfactorily accounted for. Otherwise, some uncertainty factor has to be applied to define the EAC (see section 5.4.1.2). The degree of uncertainty that is applied to these studies should be reduced in comparison to the uncertainty applied to the standard risk assessment but needs to be evaluated on a case-by-case basis and will depend on what other data are available in the risk assessment (useful guidance has been provided by the SCP in its opinion on esfenvalerate - http://europa.eu.int/comm/food/fs/sc/scp/out63_ppp_en.pdf).

It is proposed that the use of ecological models for extrapolation is developed further in the future. NOEAECs from reliable static mesocosm studies should be regarded as generally representative or possibly conservative for surface waters in most agricultural landscapes. Databases describing the abiotic and biotic conditions of surface water should be developed to aid interpretation and extrapolation between different waters and regions. Landscape ecology should be considered when evaluating the uncertainty of mesocosm results because water bodies in agricultural landscapes are often not isolated and/or completely exposed. However, in general other stressors than the use of the evaluated plant protection product should also be taken into account but currently there exists no guidance how to conduct these type of considerations.

5.6 Probabilistic Risk Assessment

Probabilistic risk assessment (PRA) is an emerging approach to environmental risk assessment, although it has been applied for many years in other scientific disciplines. Recently, the EC funded a workshop on this subject (HART 2001) which reviewed the 'state-of-the-science' and made recommendations regarding implementation and research needs. The reader is referred to the presentations in the EUPRA proceedings and the cited literature for a comprehensive view of current status as well as a discussion of the advantages and disadvantages of PRA (see http://www.eupra.com). There has also been a major review of probabilistic approaches in the USA under the Environmental Protection Agency ECOFRAM (Ecological Committee On FIFRA Risk Assessment Methods) project (information may be obtained from the EPA web site at http://www.epa.gov/oppefed1/ecorisk/). Further developments in this area of risk assessment are anticipated in the future.

In aquatic risk assessment, PRA can be applied in a variety of ways, at various levels of sophistication and complexity, covering both the effects and exposure aspects of the risk assessment. A range of these options are discussed in the EUPRA proceedings (see particularly Appendix 2 p 18 of the EUPRA report). PRA will usually be a tool for higher-tier risk assessment, and consequently the appropriateness of the risk assessments for addressing potential concerns will need to be considered on a case-by-case basis.

The traditional TER-based approach uses point estimates for the input parameters (e.g. lowest available toxicity figure, highest exposure level) and involves a global factor (= critical TER) to cover the various sources of uncertainty. Such a procedure may lead to an over-estimation of risk if the assessment is based on an extreme combination of several input values. Unfortunately, a deterministic assessment does not quantify whether that is actually true in a specific case. This problem could be overcome by probabilistic approaches. Performing a PRA involves assigning probability density functions to the various components that affect risk, and then carrying out Monte Carlo simulations or other calculations in order to estimate the probability that a certain event takes place. At present PRA has the following shortcomings:

- For many input parameters reliable information on the distribution is lacking;
- There are no common standard methods for the statistical calculations;
- Which effect percentage should be used ?

Some further criticisms of probabilistic approaches have been made by FORBES and FORBES (1993), namely:

- The need to describe species to a theoretical distribution;
- The assumption that the distribution of responses of species tested individually represents the effect on an ecological community;
- The assumption that the organisms selected for testing are an unbiased sample (an assumption of the statistical distribution);

- The need to generate larger amounts of data.

The advantages of using probabilistic approaches are:

- More of the available data are used than in a simple quotient approach;
- Through determining the shape of the sensitivity distribution, uncertainty associated with the linear extrapolations associated with standard lower-tier assessments is removed;
- The generation of additional data is encouraged, because generally more data provide a better definition of the distribution and a less conservative risk assessment.

Perhaps the most straight-forward application of PRA is the use of the "species sensitivity distribution" (SSD). In this approach, toxicity data are fitted to a statistical model in order to describe the distribution of sensitivities that would be expected in the "universe" of species. A review of such approaches has recently been published (POSTHUMA in HART 2001). SSDs have also been used by certain member states (e.g. The Netherlands). Some recommedations for the use of such approaches are also included in the HARAP workshop proceedings (CAMPBELL *et al*., 1999).

The number and type of additional species that should be tested depends on what is known about the mode of action or selectivity of the pesticide. In general, for compounds which do not appear to be selective to aquatic organisms (*i.e.*, all standard tests organisms respond at similar - within an order of magnitude - concentrations), it is suggested that eight species could be used as a minimum to describe the distribution of sensitivities of aquatic organisms. Lower numbers may be appropriate for groups of organisms like fish which show a lower variability like for example algae. However, in cases where it is known that a specific group of organisms is particularly sensitive, then the species selected for further testing should be chosen from the relevant group (see also section 5.3).

5.7 Higher-tier risk assessment for compounds which have a considerable potential to bioaccumulate

5.7.1 Introduction

When the maximum bioconcentration factor (BCF) is greater than 1000 for plant protection products containing active substances which are readily biodegradable or 100 for those which are not readily biodegradable, a higher tier risk assessment should be conducted in accordance with Annex VI Point 2.5.2.2. As bioaccumulation processes often are slow and substances could be persistent, a chronic risk assessment is appropriate. The following exposure routes should be considered:

1) Direct long-term effects in fish due to bioconcentration;
2) Secondary poisoning for birds and mammals;
3) Biomagnification in aquatic food chains.

5.7.2 Direct long-term effects in fish

Additional studies on the chronic toxicity to fish might be necessary. The trigger values for the need for an ELS-test or FLC-test for fish should be applied (see Section 2.2.2) in principle.

- An ELS-test should be applied when 100 < BCF (whole body) < 1000 and the EC_{50} of the active substance < 0.1 mg/L. Result: long-term NOEC.
- A FLC-test is required when the BCF (whole body) > 1000, and the elimination of radioactivity during the 14 day depuration phase in the bioconcentration study is < 95%, the EC50 from an acute toxicity study is < 0.1 mg/l and the substance is stable in water or sediment (DT_{90} > 100 days). Result: chronic NOEC.

A simple worst case assessment can be conducted according to the following steps:

1) Take the appropriate PECwater (PECi or TWA) from environmental fate section.
2) Compare with the relevant long-term NOEC.

If the trigger of 10 is not met, a refinement of the risk assessment is necessary. This means that microcosm or mesocosm studies, which implicitly take into account bioaccumulation, should be submitted.

5.7.3 Secondary poisoning for birds and mammals

This aspect is discussed in detail in the guidance document on higher tier risk assessment for birds and mammals (SANCO/4145/2000) where more detailed guidance is given. A simple worst case assessment can be conducted according to the following steps:

1. Take the highest PECwater (TWA, 3 weeks) from environmental fate section;,
2. Take the whole body BCF for fish;
3. Estimate residues in fish: PECfish = PECwater * BCF;
4. Convert the residue (PECfish) to daily dose by multiplying with 0.12 (for mammals)., 0.21 (for birds) and compare with relevant long-term NOEL for mammals and. birds (expressed ad mg/kg/bw/d).

If the trigger of 5 is not met, a refinement of the assessment is necessary.

5.7.4 Biomagnification in aquatic food chains

For aquatic food chains, the substances of concern are those which have a potential for biomagnification, i.e. where the whole-body-residue in an animal at steady state is higher than the residue in its food (bioaccumulation factor, BAF > 1). It should be noted that in the long-term/chronic tests with *Daphnia* and fish, biomagnification is partly covered because test organisms eat contaminated food. For substances with such properties, exposure may increase along the food chain.

For persistent and bioaccumulating substances, a higher-tier exposure assessment should be conducted. To decide upon the need for this higher-tier exposure assessment, similiar trigger values as for a FLC-test for fish should be applied in principle, namely:

- The BCF (whole body) > 1000 and the elimination of radioactivity during the 14 day depuration phase in the bioconcentration study is < 95% and the substance is stable in water or sediment (DT_{90} > 100 days).

If these triggers are met, detailed food chain modelling (e.g. according to CARBONELL et al., 2000) should be performed, or microcosm/mesocosm studies, which implicitly take into account biomagnification, should be submitted. However, it should be carefully considered whether the models used are appropriate for the special type of exposure relevant for plant protection products. If a modelling approach is selected, a food chain including at least three steps (algae, algae-feeding-invertebrates, and invertebrates-feeding-fish) should be considered. The accumulation potential in algae can be estimated as a BCF for unicellular algae. For the accumulation through the food in invertebrates and fish, toxicokinetic equations for oral uptake and depuration like the following should be used

$$BCF = F\alpha/kd$$

Where F is the daily food intake, α the assimilation factor and kd the depuration constant.

For an initial assessment, default values representing worst case conditions for F and α can be used. The kd for invertebrates can be extrapolated from the kd for fish if the metabolic route is known and is also represented in non-vertebrate animals. An additional uncertainty factor can be required in some cases to cover the differences in the metabolic activity between fish and invertebrates. If a potential risk is identified using worst-case default values, single-species oral exposure studies (e.g. MUÑOZ et al., 1996) should be conducted.

For very persistent and bioaccumulating substances, appropriate higher-tier studies and predictive models must be specifically designed to properly address the potential biomagnification and bioconcentration risk. Studies and/or models must cover the potential risk associated with continued or repeated exposures at different trophic levels. Where appropriate for the organism and mode of action, due consideration should be given to the possibility of accumulation in certain target organs, differences in metabolic capacity among taxonomic groups, and the application of toxicokinetics suitable for addressing long-term exposure conditions. For extremely bioaccumulating and persistent substances it should be considered whether modelling and microcosm/mesocosm testing is appropriate at all because even the best test methods currently available may not be sufficient to fully investigate problems which are linked to these properties of a substance. The biomagnification risk is considered a key part of the assessment, and all potential exposure routes should be considered (e.g. vegetation residues, soil and substrates from greenhouse uses).

6. Metabolites

6.1 Introduction

The active substance of a plant protection product may be transformed in the environment by either abiotic or biotic processes. Under Directive 91/414/EEC, the potential risks that these metabolites pose to aquatic organisms must be assessed in certain cases.

The use of a pragmatic approach has been broadly supported in previous reviews of this issue. In its opinion (see SCP/GUIDE/023 – Final or http://www.europa.eu.int/comm/food/fs/sc/scp/out47_en.pdf) on metabolites, the SCP stated:

"As to the 10% trigger, the SCP supports this as a pragmatic screening approach. However, it is recognised that metabolites occurring at lower levels may well be ecotoxicologically relevant. Hence, all available information and expert judgement should be used to assess if metabolites <10% give rise to particular concern. Such metabolites should then also be subjected to a risk assessment rather than a specific justification."

6.2 Definitions

To facilitate clear understanding the following generic definitions are used in this guidance document:

1. Metabolite: for the purpose of this document, the term is used for all breakdown products of an active substance of a plant protection product, which are formed in the environment after the application, be it by biotic or abiotic processes;
2. Major metabolite: all metabolites that are formed in amounts of ≥10% of the applied amount of active ingredient at any timepoint evaluated during the degradation studies in the appropriate compartment (i.e. soil, water and/or sediment) under consideration;
3. Minor metabolite: all metabolites that are formed in amounts of < 10% of the applied amount of substance of active ingredient at any time during the degradation studies under consideration;
4. Ecotoxicologically relevant metabolite: a metabolite which poses a higher or comparable risk to aquatic organisms as the active substance. Such a metabolite is relevant for the overall decision on annex I inclusion or for definition of risk mitigation measures;
5. Definition of ecotoxicologically significant residues (Annex VI, B.2.6.2): an active substance or – if appropriate – a metabolite for which an analytical method has to be established for monitoring purposes (see section 8.1).

6.3 Potential routes of entry

Metabolites can contaminate surface water via the following main routes:

(a) An active substance can enter surface water via spray drift, volatilisation/ deposition (see Section 8.5), runoff and/or drainflow and then degrade in the water or sediment phase. The route and rate of such degradation is estimated in the water-sediment study.
(b) An active substance may degrade in soil and produce a mobile metabolite which may then enter surface water via drainflow or runoff. The formation of such metabolites is measured in laboratory and field soil transformation studies.
(c) Metabolites formed in soil may also enter groundwater and these then could be present in surface water where groundwater becomes or contaminates surface water. The formation of such metabolites is measured for example in lysimeter studies or calculated with appropriate modelling software (cf. FOCUS Ground Water Report).

These routes of exposure are the most relevant for assessing risks to surface-water organisms. Considering that exposure via such routes is assessed at the point of application (eg edge-of-field with minimal dilution in a drainage ditch), these represent a worst-case for the potential risks of metabolites to aquatic organisms.

Information on the extent of formation of metabolites in water-sediment or soil transformation studies as well as in lysimeter studies can then be used along with data on the properties of the metabolite (e.g. its adsorption and persistence) to model potential exposure concentrations in surface water. These data will be provided by the fate assessment.

6.4 Data Requirements

6.4.1 Fate section

According to Annex II Section 7, fate studies are required for all major metabolites. However, risk assessment is not restricted to these major metabolites but should also include minor metabolites. Concerns related to minor metabolites may sometimes be triggered by factors such as:

- a high likelihood that the metabolite will leach
- a consistent increase in concentration or percentage of applied radioactivity towards the end of a lysimeter, a soil metabolism or water-sediment study.

However, it must be noted that there are practical constraints to metabolite identification. In general, metabolites have lower molecular weight than their precursors, making identification and quantification increasingly difficult. Minor metabolites can be difficult to identify because of the unfavourable ratio of radioactive material per peak, and the possibility that soil constituents may interfere with both the chromatographic behaviour and the method of metabolite detection or

identification. Attempts to increase the amount of material analyzed by HPLC in order to compensate for the lower amount of radioactivity can result in chromatographic peak broadening or shifting in chromatographic retention and loss of resolution. There is therefore a low mass of material available to be purified (which results in further losses). The purification steps required to generate material suitable for mass spectroscopy (the best available method for metabolite identification) and further analytical work also inevitably lead to significant losses of radioactive material. Another difficulty with minor metabolites is their often transient nature, which depends partly on the dynamics of the microbial populations during incubation of the soils and their metabolic potential during the course of the study. These problems should be considered when decisions upon the technical feasibility of the identification of a metabolite are to be made.

6.4.2 Triggering of Aquatic Risk Assessments with Metabolites

If the metabolite is CO_2 or an inorganic compound, not being a heavy metal; or, it is an organic compound of aliphatic structure, with a chain length of 4 or less, which consists only of C, H, N or O atoms and has no "structures" or functional groups which are known to be of ecotoxicological concern, then no further studies are required and the metabolite is not considered to be ecotoxicologically relevant and is of low risk to the environment.

The following section outlines how the metabolites identified in the water-sediment study should be further evaluated, depending on their chemical and fate properties. If a metabolite is formed in either the sediment or water phase, then it should be considered whether toxicity testing is required. For many minor metabolites in particular, environmental fate data may not be available. However, it may be possible to estimate these parameters using the available information such as the structure of the molecule, its retention time, or its similarity to other molecules.

Metabolites may also occur in surface water via other routes or processes, e.g. they may formed in the soil and then pass to surface water. These metabolites should be assessed as follows:

1. If as a result of a soil degradation study a metabolite is formed, an assessment should be made as to whether it is likely to enter surface water via drainflow or runoff. Data in the fate package should enable generation of a reliable PEC and hence the risk for this type of metabolite should be assessed as for the parent active substance. The PEC for such a metabolite, together with an outline of its fate properties, will be provided by the fate assessment. If the potential exposure of surface waters is negligible, then further evaluation is not required. The need for effects data will depend upon these characteristics as well as the toxicity of the active substance (see below).

2. If a metabolite is formed via hydrolysis, it is feasible that the toxicity of the metabolite may have been assessed as part of the standard toxicity studies (see Section 6.6). Data from a hydrolysis study should also be used to decide to

which extent degradation and toxicity depend on the pH-value of the test medium.

3. If a metabolite is formed via photolysis, it is proposed to adopt a case-by-case procedure. For the time being, a rapid degradation of the active substance by direct photolysis in water (DT50 in the range of a few days when calculated for environmentally relevant conditions in June in Central Europe) together with the formation of a metabolite in amounts clear above 10 % may indicate that the metabolite is likely to occur under field conditions and, therefore, further testing (e.g. by a light/dark water-sediment study) should be considered.

4. If a metabolite is likely to occur in groundwater (for example, if it is measured in a lysimeter study), exposure of aquatic life may occur where groundwater becomes surface water including indirect exposure via drainage systems. Therefore, if as a result of appropriate fate studies or modelling, a metabolite (including non-identified radioactivity from lysimeter studies) is considered likely to contaminate groundwater, then an appropriate surface water PEC should be estimated to assess the risk to aquatic life. As a very worst case starting point, it is proposed that the PECgw is used as a PECsw. This should be determined by applying the FOCUS groundwater scenarios or by using the maximum annual concentration found in a lysimeter study. If concern is raised, then a more appropriate PEC should be determined. A dilution factor (to account for the dilution when the drainage water enters the waterbody) may additionally be considered which reflects the typical environmental conditions for the crops defined in the GAPs. In general, it is difficult to propose a number for the dilution factor because the concentrations of substances in drainflow/runoff and the properties of the receiving waterbodies vary considerably. To cover even realistic worst-case conditions, a factor of 10 may be considered reasonable in the first instance.

6.5 Calculation of Metabolite PECsw

Concentrations of metabolites in surface water and sediment can be readily estimated using the ‘Step1_2 in FOCUS’ software which has a specific module for metabolite PEC calculations. Inputs required are the percentage formed in both the soil and water-sediment transformation studies (i.e. accounting for both potential entry via routes in one PEC calculation), plus the Koc, DT50 and the molecular weight of the metabolite. If these values are not available, it may be possible to estimate the Koc on the basis of the estimated log P of the compound (this can be readily done with a variety of physical chemistry software), or by evaluating retention times on analytical columns (e.g. draft OECD 117, 121 and 122). Alternatively, a conservative Koc of 10 l/kg can be assumed with respect to the water phase. For a sediment assessment a conservative Koc of 10 000 l/kg can be assumed. Similarly, if no specific soil degradation studies are available on the metabolite, its decline in the studies where it was formed may be used to estimate a DT50. Alternatively, a conservative DT50 of 300 d may be used.

6.6 Requirements for Aquatic Organism Testing with Metabolites

As a general principle, it should be understood that data requirements raised in this context do not always have to be addressed by experimental studies. Notifiers are invited to address the open questions by any other available information in support of a scientific and rational assessment. Valuable sources of information include, but are not limited to:

- Consideration of molecular structure of the metabolite (active part intact?);
- The occurrence of metabolites in existing tests with the active substance or major metabolites;
- General knowledge on the relationship between the toxicity of metabolites and their parent substances;
- Available knowledge on related compounds.

Tests with metabolites may not be required where they are generated relatively rapidly by hydrolysis, as their toxicity may be exerted in the tests on the parent compound. In toxicity studies with intensive lighting (e.g. algae and *Lemna* tests), it could be assumed that metabolites which are formed as a result of photolysis are present in an amount which is relevant for field conditions and additional toxicity testing with metabolites detected in the photolysis study might not be warranted. This is particularly the case when static studies have been used. These conclusions should be supported by analytical measurements.

If more than one metabolite is considered significant, it may be sufficient to conduct only tests with the most important metabolite (highest amount, most comparable in structure with a.s.). Alternatively, an appropriately designed microcosm or mesocosm study to address the risk from the parent compound and metabolites could be undertaken. Again, analysis should confirm that levels of the metabolite were present in the system where organisms could be considered to have been exposed.

The principles for assessing metabolites should in essence be the same as those for active substances. However, unnecessary toxicity testing of metabolites especially with vertebrates should be avoided (see below). For major and minor metabolites which require experimental studies, acute toxicity tests with *Daphnia* and a single fish species and an algal study should be conducted. Metabolites should in general also be tested with *Lemna*, *Chironomus* or other species if these taxa have been the most sensitive with the active substance. Initially, it is only necessary to test the most sensitive species from a particular group (eg only rainbow trout if more sensitive than warmwater fish). Testing on additional species may be necessary where the risk to a particular taxonomic group is considered to be of concern and is predicted to be greater than that from exposure to the parent compound. If it can be demonstrated that certain taxonomic groups are clearly less sensitive to the active substance (by a factor of 100) than other groups, testing can be limited to those which are the most sensitive ones. If testing reveals that the toxicity of the metabolite to one taxonomic

group is similar to or higher than the parent then testing may be required on all taxonomic groups.

Recently the use of quantitative structure-activity relationships (QSAR) to evaluate toxicity of metabolites has been suggested (SINCLAIR&BOXALL, 2002). –These approaches are particularly useful for metabolites that no longer contain the toxophore, and they should be used, if appropriate. Especially when requiring toxicity tests with a minor metabolite or metabolites occurring in soil or lysimeter studies, the aforementioned aspects should be considered very thoroughly. From numerous tests with metabolites it can be concluded that in most cases metabolites are less toxic than the a.s. and therefore pose a lower risk than the active substance (STRELOKE et al, 2002; SINCLAIR&BOXALL, 2002). Whilst there are some exceptions (e.g. if the active moiety is still present in the metabolite structure or if known structures of higher toxicity are formed or if the metabolite partitions to a larger extent into sediment than an predecessor in the degradation procedure), it is very unlikely for toxicity to increase by more than a factor of 10. Taking into account that the PEC_{SW} for a minor metabolite is very often by a factor of 10 lower than the PEC_{SW} for the parent, it becomes obvious, that even the few cases where metabolites might be slightly more toxic than their parent substances, are covered by the following approach which should be used on a case by case basis.

In the first instance a PEC_{SW} for the minor metabolite should be calculated and compared with the most relevant toxicity value from the risk assessment on the active substance divided by 10 to cover the very unlikely increase of toxicity of the metabolite compared with the active substance. This TER should then be compared with the relevant trigger of Annex VI. In general, only toxicity tests with a minor metabolite should be required if this trigger is failed,. The same approach should be used for major metabolites formed in soil and those determined in lysimeter studies which may contaminate surface waters via groundwater, drainage systems or run-off.

In order to decide whether chronic testing is necessary, the intended uses, the fate and behaviour of the metabolite, and the acute TER values for the metabolite should be taken into account. In general chronic/long term tests are only necessary if the persistence trigger for chronic tests is surpassed for the metabolite (see sections 2.2.2, 2.3.1). In terms of the choice of taxonomic group(s) to be studied, this should take account of any acute toxicity data on the metabolite, the acute and chronic toxicity data on the active substance, and data on fate and behaviour in aquatic systems. Only if the metabolite is more acutely toxic than the active substance should long-term/chronic tests be required. Where acute toxicity data are available on fish and *Daphnia* for a particular metabolite, chronic testing should only be required on the more sensitive group. If in individual cases there is clear evidence that a metabolite is likely to be more toxic in chronic/long-term tests than the parent, or it exhibits endocrine disrupting properties, then chronic/long-term tests should be required with this metabolite.

For unstable active substances (i.e. those that do not meet the persistence criteria detailed in Sections 2.2.2 and 2.3.1), it may be more appropriate to conduct chronic

studies on the stable metabolite instead of the parent compound. For unstable active substances, where chronic toxicity data for the parent compound are not available and an environmentally significant metabolite exceeds the persistence criteria specified in Sections 2.2.2 and 2.3.1, chronic toxicity data should be submitted for this metabolite regardless of its acute toxicity.

In principle, for major metabolites found in the sediment of a water-sediment study, the same triggers should be applied to metabolites as for the active substance. That is, in order to justify testing, metabolites should be present and persist in sediment and have the potential to be toxic to aquatic invertebrates. Therefore to require testing, a metabolite found in sediment should be present in the sediment at a level of more than 10% of the parent applied radioactivity at day 14 or later. Clearly the potential to exclude testing on the basis of toxicity will depend on the data that is available for the metabolite. The notifier should therefore make a case as to whether sediment testing is justified based on what is known about the toxicity profile of the metabolite. For example, if risk assessments with *Daphnia* indicate that the potential risks are low, then no further testing should be required.

6.7 Risk Assessment for Metabolites

In principle, the risk assessment process for metabolites will be similar to that for active substances, albeit recognising that risk assessment cases will not always require specific study data for certain metabolites. If preliminary risk assessments indicate potential concerns then, as for parent molecules, risk refinement is possible either by refining effect concentrations or by refinement of the exposure concentration (see Section 5).

If higher-tier studies have been conducted with the active substance, or a relevant formulation, these studies may have also assessed the risk from the metabolites. It is advised that if a higher-tier study, e.g. mesocosm study, is being carried out then appropriate analysis should be conducted so that an assessment of both the exposure and effects of any metabolites can be made.

6.8 Defining ecotoxicological relevance

If as a result of the above risk assessment, a metabolite is considered to pose a similar or even higher risk to the aquatic environment than the parent active substance, and therefore, risk mitigation measures are needed, this metabolite is considered as “ecotoxicologically relevant”. Such a metabolite – but also the active substance - must be included in the residue definition. For an ecotoxicologically relevant metabolite – but also the active substance - a concentration where no unacceptable effects on aquatic organisms are to be expected needs to be defined (see Section 8.1).

7. Risk management

It should be noted that a new FOCUS group on landscape ecology and risk mitigation has been established recently. The outcome of the discussions in this group should be taken into account when setting risk mitigation measures.

A standard risk assessment or even a higher-tier risk assessment (as referred to above) may indicate that the risk to aquatic life may only be acceptable providing that risk management measures are used. When an active substance is under consideration for Annex I listing, the RMS should include reference to possible risk management measures that are required to identify a “safe use”. Decisions on appropriate risk management options should, however, be made at the MS-level, when plant protection products are registered.

The most obvious risk management or mitigation measure is a “buffer zone”. This is an unsprayed strip between the target spraying area and a water body. This measure is currently used in several MSs. As well as buffer zones, a variety of other risk mitigation measures are available which could be applied by Member States to manage risk. Establishment of wind breaks such as rows of trees may reduce spray drift contamination (as recommended especially in the NL). Improved application technique may also minimises spray drift (as recommended especially in DE, UK, NL). Other member states like the UK allow reductions in the standard buffer zone where the application rate used is below the maximum approved rate. There may also be differences in risk to different types of water bodies, and since the FOCUS surface water group will recommend the inclusion of flowing waters in future scenarios, it may be possible to differentiate risk management measures for different water body types (e.g. ditches, streams, rivers, semi-permanent waters)

It may be necessary to consider scenarios other than the preliminary worst-case standard one (i.e. a small 30 cm deep lentic system completely contaminated by the maximum application rate). It may also be appropriate to use more suitable spray drift data which may take in to account environmental factors, or the use of low spray drift technology. Notifiers and/or MSs may submit additional scenarios which are representative for local use conditions for evaluation on EU-level. However, the suitability of these scenarios must be supported by data.

Examples from DE and UK and other MS are available on how to implement additional scenarios in current schemes of setting risk mitigation measures (MAFF 2000; FORSTER&STRELOKE, 2001):

8. Other issues

8.1 Definition of ecotoxicologically significant residues – aquatic life (Annex VI, 2.6.2)

With respect to the inclusion into the definition of ecotoxicologically significant residues – aquatic life - the active substance and ecotoxicologically relevant metabolites are always relevant (see Section 6.8). Regarding metabolites the hazard should additionally be considered and any hazardous metabolite should be included in the definition of residues (see below). Additional studies can be submitted to remove the metabolite from the definition of residues if it can be shown that the environmental hazard is low.

A monitoring analytical method (see guidance documents SANCO/3029/99 and SANCO/825/00) may be required for hazardous metabolites where the relevant toxicity value is lower than 100 mg/l. In case the metabolites are not likely to persist or bioaccumulate, the method will only be asked for if the relevant toxicity value is below 1 mg/l.The concentration of 1 mg/l covers even extreme concentrations measured in monitoring programmes together with an uncertainty factor. At the same time it is achieved that for a metabolite classified as “highly toxic” analytical methods are available.

The concentration where in accordance with Annex VI no effects on aquatic organisms are to be expected (relevant toxicity value for the most sensitive organism together with uncertainty factor) should be included into the “Definition of ecotoxicologically significant residues - aquatic life” which should be included into the list of endpoints for aquatic organisms.

8.2 Animal experimentation

For reasons of animal welfare, every effort should be made to avoid duplicate tests on higher animal species.

8.3 Endocrine Effects

The area of endocrine disruption is currently under a great deal of debate at both national and international level, and significant research efforts are underway to establish the importance of such mechanisms of toxicity to aquatic organisms. Endocrine disruption should be viewed as one of the many existing mechanisms of toxicity of chemicals and thus can be assessed within the normal conceptual framework. Endocrine concerns cover a potentially wide range of mechanisms, not just potential effects on reproduction, and so the development of regulatory procedures in this area is complicated. There is currently a significant amount of discussion underway at an international level (e.g. via OECD, US-EPA). These efforts are developing tiered-testing and risk assessment approaches, and it is therefore

premature to make firm recommendations at present until broader consensus on appropriate approaches have been agreed.

For the time being, evidence from appropriate mammalian studies should be reviewed to determine whether active substances are demonstrating potential endocrine effects. For example, thyroid or gonadal tumors, or effects on sex differentiation and sex organ development could be indicators of an endocrine effect. In such cases, it may be appropriate to use data from a fish ELS-test to assess potential for developmental effects, or from a fish partial life-cycle study to assess reproductive effects (although guideline methods for the latter are not yet available) as a first step. The need of further testing (e.g. FLC-test, *Xenopus laevis* test) should be considered.

Whilst endocrine disruption is an emerging area of science, there are no indications that it is different in terms of uncertainty to any other mechanism of toxicity. As such, in most cases endocrine disruption mechanisms of toxicity should be able to be dealt with within the same framework as other expressions of effect. This opinion is reinforced by the conclusions of the Report of the Working Group on Endocrine Disrupters of the Scientific Committee on Toxicity, Ecotoxicity and the Environment (CSTEE of March 1999).

Formulants clearly identified as endocrine disrupter like for example nonylphenol should not be used in formulated products. For such type of substances, a full data set including chronic/long-term tests should be required.

8.4 Organisms dwelling in groundwater

Increasing research on the complex of the biological ground water community has led to the recognition of the ground water ecosystem as a subject of protection in its own right (HEALTH COUNCIL OF THE NETHERLANDS , 1996; FRAUNHOFER-INSTITUT FÜR UMWELTCHEMIE UND ÖKOTOXIKOLOGIE, 2001). Therefore active substances and metabolites occurring in ground water (i.e. metabolites detected in lysimeter studies and metabolites from soil degradation studies for which entry into ground water has been predicted by means of FOCUS calculations) may be assessed with regard to their impact on ground water ecosystems in future. In the absence of more specific information and agreed testing guidelines, it can be assumed that ground water organisms are of comparable sensitivity as taxonomically and physiologically related surface water organisms. Crustaceans represent the most important ground water taxa and – from a preliminary scientific point of view - data on surface water crustaceans are considered adequate and sufficient to cover ground water organisms. However, recovery observed in higher-tier tests may not be relevant for organisms dwelling in ground water. If active substances have very specific modes of action and if crustaceans are not well-represented by *Daphnia* further considerations might be needed (see for example Section 2.3.2). Currently there are no agreed schemes for exposure and risk assessments available. Therefore this issue

should be further researched and, if appropriate, incorporated into revisions of 91/414/EEC and of this guidance document.

9. References

BOXALL A, BROWN C, BARRETT K. (2001). Higher tier laboratory aquatic toxicity testing. Cranfield Centre for EcoChemistry research report No. JF 4317E for DETR, 70 pp.

BROCK T C M; LAHR J; VAN DEN BRINK P J (2000a). Ecological risks of pesticides in freshwater ecosystems. Part 1: Herbicides. Alterra-Rapport 088. 124 pp., Alterra Green World Research, Wageningen, Netherlands.

BROCK T C M, VAN WIJNGAARDEN R P A, VAN GEEST G J (2000b). Ecological risks of pesticides in freshwater ecosystems. Part 2: Insecticides. Alterra-Rapport 089. 142 pp., Alterra Green World Research, Wageningen, Netherlands.

CAMPBELL, P.J.; ARNOLD, D.J.S.; BROCK, T.C.M.; GRANDY, N.J.; HEGER, W.; HEIMBACH, F.; MAUND, S.J.; STRELOKE, M. (1999): Guidance Document on Higher-tier Aquatic Risk Assessment for Pesticides (HARAP), SETAC-Europe Publication, Brussels.

CARBONELL G, RAMOS C, PABLOS MV, ORTIZ JA, TARAZONA JV (2000). A system dynamic model for the assessment of different exposure routes in aquatic ecosystems. Sci Total Environ. 247:107-118.

DI TORO, D.M., C.S. ZARBA, D.J. HANSEN, J.J BERRY, R.C. SWART, C.E. COWAN, S.P. PAVLOU, H.E. ALLEN, N.A. ALLEN AND P.R. PAQUIN. (1991). Technical basis for examining sediment quality criteria for non-ionic organic chemicals using equilibrium partitioning. Environ. Toxicol. Chem. 10: 1541-1586.
ECETOC (1996). The role of bioaccumulation in environmental risk assessment : The aquatic environment and releated food webs. Technical report no. 67, ISNN-0773-8072-67, Brussels.

EUROPEAN COMMISSION (1996). Technical Guidance Document in Support of Commission Directive 93/67/EEC on Risk Assessment for New Notified Substances and Commission Regulation (EC) No 1488/94 on Risk Assessment for Existing Substances Part IV (97EU1-1/9)“, European Commission, 1996, ISBN 92-827-8014-7.

FORSTER, R.; STRELOKE, M. (2001).Workshop on Risk Assessment and Risk Mitigation Measures in the Context of the Authorization of Plant Protection Products (WORMM). Mitt.Biol.Bundesanst.Land- Forstwirtsch. Berlin-Dahlem, Heft 381.

FRAUNHOFER-INSTITUT FÜR UMWELTCHEMIE UND ÖKOTOXIKOLOGIE (2001). Ökotoxikologische Prüfung von Pflanzenschutzmitteln hinsichtlich ihres Potentials zur Grundwassergefährdung - Ecotoxicological testing of pesticides with respect to their potential of endangering groundwater communities, UBA-Text 76/01.

GANZELMEIER, H.; RAUTMANN, D.; SPANGENBERG, R.; STRELOKE, M.; HERRMANN, M.; WENZELBURGER, H.-J.; WALTER, H.-F. (1995). Studies on the spray drift of plant protection products. Mitt.Biol.Bundesanst.Land- Forstwirtsch. Berlin-Dahlem, Heft 305.

GIDDING, J.M.; BROCK, T.C.M.; HEGER, W.; HEIMBACH, F.; MAUND, S.J.; NORMAN, S.M.; RATTE, H.T.; SCHÄFERS, C.; STRELOKE, M. editors (2002).Community-Level Aquatic System Studies – Interpretation criteria. Pensacola, FL, USA: Society of Environmental Toxicology and Chemistry (SETAC). p 60.

HART, A. (2001). Probabilistic risk assessment for pesticides in Europe: Implementation & reasearch needs. A report from the European workshop on probabilistic risk assessment for the environmental impacts of plant protection products, The Netherlands, June 2001. Central Science Laboratory, Sand Hutton, York, UK (ISBN 185 945 010 5).

HEALTH COUNCIL OF THE NETHERLANDS: COMMITTEE ON PESTICIDES AND GROUNDWATER (1996). Risks of pesticides to groundwater ecosystems. Rijkswijk: Health Council of the Netherlands, 1996; publication no. 1996/11E. ISBN:90-5549-135-7.

MAFF (2000). Local Environmental Risk Assessment for Pesticides – A practical guide, MAFF, London.

MUÑOZ, M.J., RAMOS, C. AND TARAZONA, J.V. (1996). Bioaccumulation and toxicity of hexachlorobenzene in *Chlorella vulgaris* and *Daphnia magna*. Aquatic Toxicology 35:211-220.

OECD (1999). Guidance document on aquatic toxicity testing of difficult substances.

RATTE, T. (1998). Influence of the groth pattern on the EC50 of cell number, biomass integral and growth rate in the algae growth inhibition test. Report für the German UBA (Project 36003010).

RAUTMANN, D; STRELOKE, M., WINKLER, R. (2001). New basic drift values in the authorisation procedure for plant protection products. In Forster, R.; Streloke, M. Workshop on Risk Assessment and Risk Mitigation Measures in the Context of the Authorization of Plant Protection Products (WORMM). Mitt.Biol.Bundesanst.Land-Forstwirtsch. Berlin-Dahlem, Heft 381.

SCP (1999). Opinion of the Scientific Committee on Plants on the Draft Guidance Document on Aquatic Ecotoxicology. SCP/GUIDE/023 – Final, 27 September 1999. http://europa.eu.int/comm/food/fs/sc/scp/out47_en.html

SINCLAIR, C.J., BOXALL, A.B.A. (2002) Assessment of the environmental properties and effects of pesticide transformation products. Report to DEFRA, Project No. PN-0930.

STAVELY, J.P (1999). An evaluation and comparison of the relative merits of various parameter used to express the results (at 72 and 96 hours) of algal toxicity tests. Report prepared for the EPA.

STRELOKE, M.; KÖPP, H. (1995). Long-term toxicity test with *Chironomus riparius:* Development and validation of a new test system. Mitt.Biol.Bundesanst.Land-Forstwirtsch. Berlin-Dahlem, Heft 315.

STRELOKE, M.; JOERMANN G.; KULA, H.; SPANGENBERG, R. (2002). Analysis of toxicity data on aquatic organisms for regulatory purposes. Poster at the SETAC-Europe meeting,Vienna.

SUTER, G.W. (1993). Ecological risk assessment. Lewis Publishers, Boca Raton, 538 pp.

VAN DEN BRINK, P.J., TER BRAAK C.J.F. (1999): Principal Response Curves: Analysis of time-dependent multivariate responses of a biological community to stress. Environmental Toxicology and Chemistry 18:138-148.

WOGRAM J. & LIESS M. (2001). Rank ordering of macroinvertebrate species sensitivity to toxic compounds by comparison with that of *Daphnia magna*. Bull. Environ. Contam. Toxicol. 67: 360-367.

10. Annex

10.1 Annex 1 – Worked examples regards sediment-dwelling organisms

1. Compound X is an insecticide which can be used 4 times at 14 day intervals at an application rate of 250 g ai/ha in vegetable row (arable) crops. In the water-sediment studies, Compound X was found at maxima of 21 and 30% after 14 days in the two sediments tested. It has a Koc of 1000, water solubility of 1 mg/l, and DT50s in sediment water system of 35 d and in soil of 14 d. The 48 h EC50 to *Daphnia* is 0.75 µg/l and the 21 d NOEC is 0.020 µg/l.

Using Step1_2 in FOCUS, the peak concentration of Compound X for four applications in the water phase is 4.7 µg/l and the maximum 21 d time-weighted average PEC is 0.73 µg/l. These can be compared to the *Daphnia* effect concentrations:

	Acute effect concentration (µg/l)	Long-term effect concentration (µg/l)
	0.75	0.020
Relevant PECsw	4.7	0.73
TER	0.16	0.027
Sediment testing triggered?	Yes	Yes

Sediment testing is triggered because the compound has significant sediment exposure and has demonstrated potential risks to aquatic invertebrates.

2. Compound Y is a fungicide which can be used 8 times a season at 7 day intervals at an application rate of 1000 g ai/ha in vines. Compound Y has a Koc of 850, a water solubility of 15 mg/l, and was found at maximum of 8 % in the sediment in a water/sediment study, where it degraded rapidly with a half-life of 8 days. The soil half-life was also rapid at 2 days. The 48 h EC50 for *Daphnia* of Compound Y is 3 mg/l and the 21 d NOEC is 0.1 mg/l.

Using Step1_2 in FOCUS, the peak concentration of Compound Y for eight applications in the water phase is 13 ug/l and the maximum 21 d time-weighted average PEC is 6 ug/l. These can be compared to the *Daphnia* effect concentrations:

	Acute effect concentration (mg/l)	Long-term effect concentration (mg/l)
	3	0.1
Relevant PECsw	0.013	0.006
TER	230	17
Sediment testing triggered?	No	No

Sediment testing is not triggered because although there is potential exposure in the sediment, the compound is of low risk to aquatic invertebrates.

10.2 Annex 2 - Worked examples regards metabolites

The following examples are provided as illustrations of how the risk to aquatic life from metabolites that occur at less than 10% of applied active substance may be assessed. It should be noted that these calculations are included only as examples, and should not be taken as precedent.

10.2.1 Approach using SINCLAIR&BOXALL, 2002

Compound X degrades in soil to two metabolites, one which occurs at >10% and one less than 10%. The key fate and ecotoxicological endpoints are outlined in Table 9.2.1 and 9.2.2. As this is a new compound, it is not known whether the toxicophore is present in metabolite B. As regards determining a PEC, no information is available on DT50 etc for metabolite B, however this metabolite occurs at a maximum of 4% of the applied active substance and therefore this information will be used when estimating the environmental concentration. The parent compound is applied once at 100 g/ha to cereals in the autumn. It is assumed that there is no interception.

Table 10.2.1: Key fate endpoints for compound X and metabolites

	Soil DT50 First order	**Koc**	**Water DT50 First order**	**Molecular weight**	**% found in soil**	**PECsw µg/l**	**PECsed µg/kg**
Parent active substance	15 days	615 ml/g	30 days	260	-	1.26	38.67
Metabolite A	69 days	240 ml/g	n.a.	270	40	1.02	12.28
Metabolite B	Default 300 days	default 10 ml/g for PECsw default 3000 ml/g for PECsed	n.a.	210	4	0.3	1.53

(NB PECs calculated using draft version of FOCUS Step 1. Calculated as outlined in section 6.5. May need to be amended once FOCUS draft is finalised.)

Table 10.2.2: Key aquatic endpoints for compound X and metabolites

	Fish 96 hr LC50 mg/l	***Daphnia magna* 48 hr EC50 mg/l**	**Alga 72 hr EC50 mg/l**	***Lemna* 7-day EC50 mg/l**	**Chiro-nomid 28-day NOEC mg/kg**	**Fish ELS NOEC mg/l**	***Daphnia magna* 21 day N0EC mg/l**
Parent active substance	0.25	0.67	0.01	10	>100	0.18	0.36
Metabolite A	>100	>100	2.3	n.a.	n.a.	n.a.	n.a.
Metabolite B	n.a.	n.a.	n.a.	n.a.	n.a.	n.a.	n.a.

From Table 10.2.1, it can be seen that a full set of fate endpoints are available for the active substance. For the Metabolite A there are some endpoints, whilst for Metabolite B no data are available and hence the default values as proposed in Section 5 have been used. From Table 10.2.2 it can be seen that a full set of acute toxicity studies have been submitted and that alga is the most sensitive species. Chronic toxicity data have also been submitted. Data have not been submitted on the toxicity of Metabolite A to *Lemna*. Data are also not available on the chronic toxicity of Metabolite A to fish or *Daphnia magna*. On assessment of the acute data on Metabolite A, it can be seen that the compound has low toxicity to fish and *Daphnia magna*, however it is still moderately toxic to alga. On the basis of these data it has been concluded that no chronic data on Metabolite B are required as alga are of primary concern.

No data have been submitted on the toxicity of Metabolite B. According to the approach provided above, where there is a lack of information regarding the presence or absence of the toxicophore and a lack of fate endpoints (namely Kow and dissociation constant), then the metabolite should be assumed to be ten times more toxic than the parent (see Section 6.6).

In Table 10.2.3 the TERs for the active substance as well as metabolites A and B are presented. On the basis of the available data on Metabolite A, it can be concluded that this metabolite is not ‘ecotoxicologically relevant’.

It can be seen that by assuming the toxicity of Metabolite B is ten times higher than the parent, then the risk to aquatic life is still considered to be acceptable, i.e. TERs are above the relevant Annex VI trigger values. It can be further concluded that Metabolite B is not ‘ecotoxicologically relevant’.

Table 10.2.3 TERs for active substance and metabolites A and B

	Fish	***Daphnia magna***	**Alga**	***Lemna***	**Chiro-nomid, chronic**	**Fish, chronic**	***Daphnia magna* , chronic**
PEC – parent (µg/l)	1.26	1.26	1.26	1.26	38.67 (µg/kg)	1.26	1.26
TER – parent	198	532	7.9*	7936	2585	143	288
PEC – metabolite A (µg/l)	1.02	1.02	1.02	1.02	12.28 (µg/kg)	1.02	1.02
TERmeta A	>98039	>98039	2255	n.a.	n.a.	n.a.	n.a.
PEC – metabolite B (µg/l)	0.3	0.3	0.3	0.3	1.53 (µg/kg)	0.3	0.3
TERmeta B	83	223	3.3	3333	6535	60	120

*** THIS TER IS BELOW THE APPROPRIATE ANNEX VI TRIGGER VALUE AND THEREFORE APPROPRIATE RISK MANAGEMENT MEASURES AND/OR HIGHER TIER DATA ARE REQUIRED ON THE ACTIVE SUBSTANCE.**

10.2.2 Example from the Scientific Committee on Plants (SCP)

The Scientific Committee on Plants (SCP) also has provided useful guidance. In the SCP opinion on imazasulfuron[3], the risk to aquatic life of ISPN was evaluated - a metabolite, which occurred at greater than 10%. However in assessing the risk from this metabolite a qualitative approach was used by the SCP. Full details can be found on http://www.europa.eu.int/comm/food/fs/sc/scp/out103_ppp_en.pdf. It should be noted that the SCP opinion was modified by the RMS in so far as the methods for calculating the PECs for the exposure route drainage were improved.

3 Opinion on the evaluation of imazosulfuron [th-913] in the context of Council Directive 91/414/EEC concerning the placing of plant protection products on the market. SCP/IMAZO/002-Final adopted 25 April 2001.

10.3 Annex 3: Testing requirements for active substances

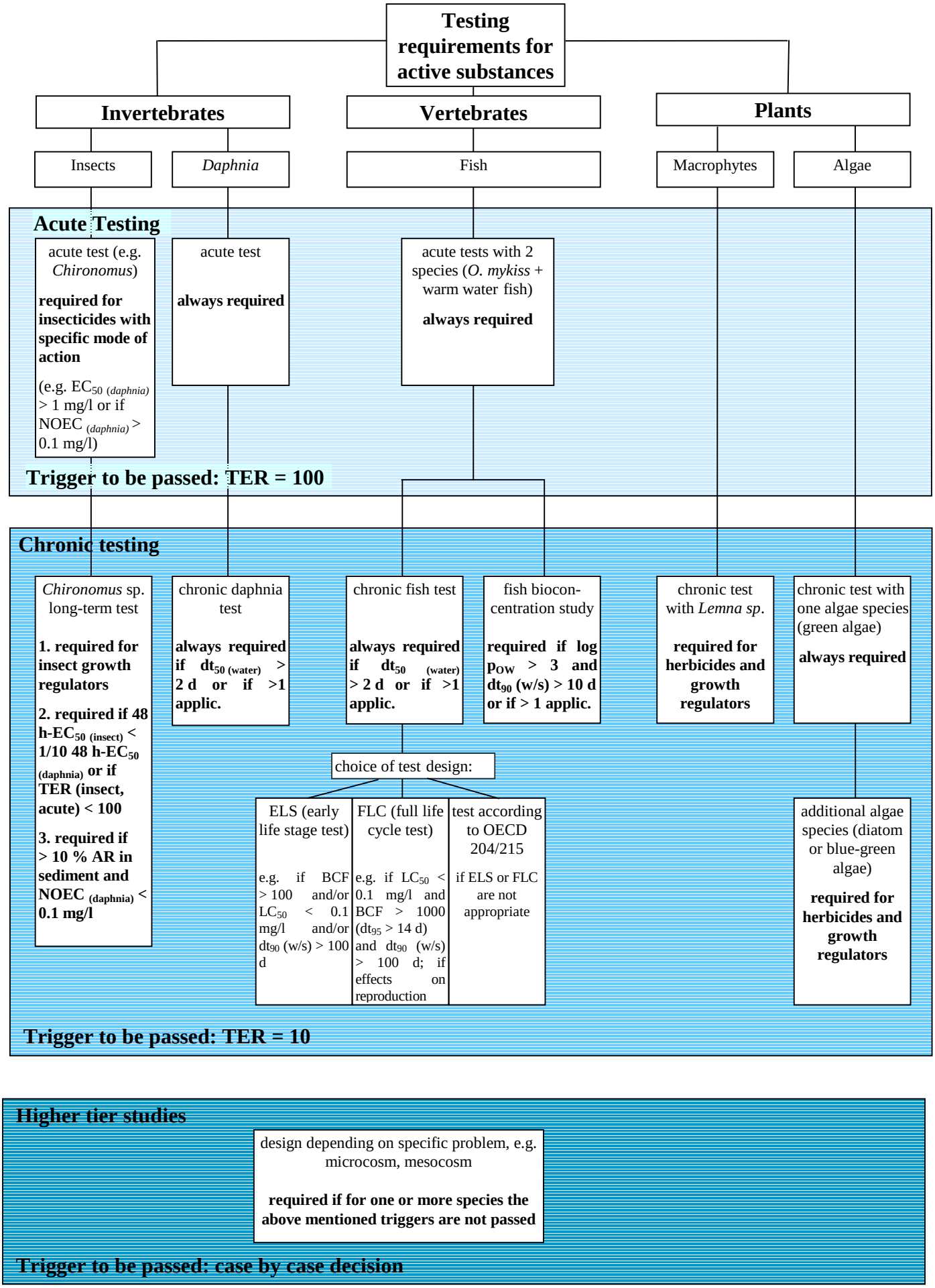

Please note, that this assessment scheme is simplified. Additional tests are usually required for formulated products and metabolites. For more detailed information see the respective chapters in the text

EXHIBIT 48

Organisation de Coopération et de Développement Economiques
Organisation for Economic Co-operation and Development

09-May-2006

English - Or. English

ENVIRONMENT DIRECTORATE
JOINT MEETING OF THE CHEMICALS COMMITTEE AND
THE WORKING PARTY ON CHEMICALS, PESTICIDES AND BIOTECHNOLOGY

ENV/JM/MONO(2006)18
Unclassified

OECD SERIES ON TESTING AND ASSESSMENT
Number 54

CURRENT APPROACHES IN THE STATISTICAL ANALYSIS OF ECOTOXICITY DATA: A GUIDANCE TO APPLICATION

Ms. Laurence MUSSET
Tel: +33 (0)1 45 24 16 76; Fax: +33 (0)1 45 24 16 75; Email: laurence.musset@oecd.org

JT03208537

Document complet disponible sur OLIS dans son format d'origine
Complete document available on OLIS in its original format

English - Or. English

OECD Environment Health and Safety Publications

Series on Testing and Assessment

No. 54

CURRENT APPROACHES IN THE STATISTICAL ANALYSIS OF ECOTOXICITY DATA: A GUIDANCE TO APPLICATION

Environment Directorate

ORGANISATION FOR ECONOMIC CO-OPERATION AND DEVELOPMENT

Paris 2006

TABLE OF CONTENTS

FOREWARD 10
1. INTRODUCTION 13
2. SCOPE 14
3. DEFINITIONS 15
4. GENERAL STATISTICAL PRINCIPLES 20
4.1. Different statistical approaches 20
4.1.1. Hypothesis-testing methods 20
4.1.2. Concentration-response modelling methods 21
4.1.3. Biology-based methods 22
4.2. Experimental design issues 23
4.2.1. Randomisation 24
4.2.2. Replication 24
4.2.3. Multiple controls included in the experimental design 25
4.3. Process of data analysis 26
4.3.1. Data inspection and outliers 26
4.3.2. Data inspection and assumptions 27
4.3.3. Transformation of data 28
4.3.4. Parametric and non-parametric methods 29
4.3.5. Pre-treatment of data 31
4.3.6. Model fitting 31
4.3.7. Model checking 32
4.3.8. Reporting the results 33
5. HYPOTHESIS TESTING 34
5.1. Introduction 34
5.1.1. The NOEC: What it is, and what it is not. 39
5.1.2. Hypothesis Used to determine NOEC 39
5.1.3. Comparisons of single-step (pairwise comparisons) or step-down trend tests to determine the NOEC 42
5.1.4. Dose metric in trend tests 45
5.1.5. The Role of Power in Toxicity Experiments 45
5.1.6. Experimental design 46
5.1.7. Treatment of Covariates and Other Adjustments to Analysis 48
5.2. Quantal data (e.g., Mortality, Survival) 49
5.2.1. Hypothesis testing with quantal data to determining NOEC values 49
5.2.2. Parametric versus non-parametric tests 50
5.2.3. Additional Information 54
5.2.4. Statistical Items to be Included in the Study Report 54
5.3. Continuous data (e.g., Weight, Length, Growth Rate) 55
5.3.1. Hypothesis testing with continuous data to determine NOEC 55
5.3.2. Statistical Items to be Included in the Study Report 61

6. DOSE-RESPONSE MODELLING 62
6.1. Introduction 62
6.2. Modelling quantal dose-response data (for a single exposure duration) 63
6.2.1. Choice of model 66
6.2.2. Model fitting and estimation of parameters 72
6.2.3. Assumptions 74
6.3. Dose-response modelling of continuous data (for a single exposure duration) 76
6.3.1. Choice of model 77
6.3.2. Model fitting and estimation of parameters 83
6.3.3. Assumptions 89
6.4. To accept or not accept the fitted model? 91
6.5. Design issues 96
6.6. Exposure duration and time 97
6.7. Search algorithms and nonlinear regression 101
6.8. Reporting Statistics 102
7. BIOLOGY-BASED METHODS 103
7.1. Introduction 103
7.1.1. Effects as functions of concentration and exposure time 103
7.1.2. Parameter estimation 105
7.1.3. Outlook 106
7.2.3. The modules of effect-models 106
7.2.1. Toxico-kinetics model 107
7.2.2. Physiological targets of toxicants 108
7.2.3. Change in target parameter 109
7.2.4. Change in endpoint 109
7.3. Survival 110
7.4. Body growth 112
7.5. Reproduction 115
7.6. Population growth 117
7.7. Parameters of effect models 119
7.7.1. Effect parameters 119
7.2.2. Eco-physiological parameters 123
7.8. Recommendations 125
7.8.1. Goodness of fit 125
7.8.2. Choice of modes of action 126
7.8.3. Experimental design 126
7.8.4. Building a database for raw data 126
7.9. Software support 126
7.9.1. DEBtox 127
7.9.3. DEBtool 127
8. LIST OF EXISTING GUIDELINES WITH REFERENCE TO THE CHAPTERS OF THIS DOCUMENT 129
REFERENCES 132

5. HYPOTHESIS TESTING

5.1. Introduction

101. This chapter provides an overview of both hypothesis testing and methodological issues specific to determining NOECs under various experimental scenarios. It is divided into three major parts. The first part includes flow charts summarising possible schemes for analysing quantal (Fig. 5.1) and continuous data (Fig. 5.2 and 5.3), along with some basic concepts that are important to the understanding of hypothesis testing and its use in the determination of NOECs. Special attention is given to the choice of the hypothesis to be tested, as this choice may vary depending on whether or not a simple dose-response trend is expected, and on whether increases, or decreases (or both) in response are of concern. The remainder of the chapter is divided into two major sections that discuss statistical issues related to the determination of NOECs for quantal and continuous data (Sections 5.2 and 5.3 respectively) and provide further details on the methods listed in Figures 5.1 and 5.2.). This division reflects the fact that different statistical methods are required for each type of data, and that problems arise that are unique to the analysis of each type of data. An attempt has been made to mention the most widely used statistical methods, but to focus on a set of methods that combine desirable statistical properties with reasonable simplicity. For a given set of circumstances, more than one statistical approach may be acceptable, and in such cases the methods are described, the limitations and advantages of each are given, and the choice is left to the reader. The flow charts in Figures 5.1 and 5.2 indicate a possible choice of methods. Examples of the application of many of these methods, mathematical details and properties of the methods are presented in Annex 5.1.

102. The most commonly used methods for determining the NOEC are not necessarily the best. Relatively modest changes in current procedures for determining NOECs (e.g., selection of more powerful or biologically more plausible statistical methods) can improve the scientific basis for conclusions, and result in conclusions that are more protective of both the environment and business interests. Thus, some of the methods recommended may be unfamiliar to some readers, but all of the recommended methods should be compatible with current ISO and OECD guidelines that require the determination of NOECs.

103. A basic principle in selecting statistical methods is to attempt to use underlying statistical models that are consistent with the actual experimental design and underlying biology. This principle has historically been tempered by widely adopted conventions. For example, it is traditional in ecotoxicological studies to analyse the same response measured at different time points separately by time point, although in many cases unified analysis methods may be available. It is not the purpose of this section to explore this issue. Instead, discussion will be restricted to the most appropriate analysis of a response at a single time point and, usually, for a single sex.

104. NOECs, as defined and discussed in this document, are based on a concept sometimes called "proof of hazard". In essence, the test substance is presumed non-toxic unless the data presents sufficient evidence to conclude toxicity. Alternative approaches to assessing toxicity through hypothesis testing exist. For example Tamhane *et al* (2001) and Hothorn and Hauschke (2000) develop an approach based on proof of non-hazard. Specifically, if an acceptable threshold of effect is specified, such as a 20% decrease in mean, then the maximum safe dose (MAXSD in Tamhane *et al* (2001)) is the highest concentration for which there is significant evidence that the mean effect is less than 20%. These are relatively new approaches that have not been thoroughly tested in a practical setting and for few endpoints is there agreement on what level of effect is biologically important to detect. All current guidelines regarding NOEC are based on the proof of hazard concept. For these reasons, this alternative approach will not be presented in this chapter, though they do hold some promise for the future. The only common exception to this is in regard to limit tests, where in addition to determining whether there is a statistically significant

effect in the single test concentration, one also tests for whether the effect in the test concentration is less than 50%. A simple t-test can be used for that purpose.

105. It should also be realized that statistics and statistical significance cannot be solely viewed as representative of biological significance. There can be no argument that statistical significance (or lack thereof) depends on many factors in addition to the magnitude of effect at a given concentration. Statistics is a tool that is used to aid in the determination of what is biologically significant. If an observed effect is not statistically significant, the basis for deciding it is nonetheless biologically significant is, obviously, not statistical. Lack of statistical significance may be because of a low power test. On the other hand, a judgment of biological significance without sufficient data to back it up is questionable.

106. The flow-charts and methodology presented indicate preliminary assessment of data to help guide the analysis. For example, assessments of normality, variance homogeneity, and dose-response monotonicity are advocated routinely. Such preliminary assessments do affect the power characteristics of the subsequent tests. The alternative to making these assessments is to ignore the characteristics of the data to be analyzed. Such an approach can be motivated on the perceived general characteristics of each endpoint. However, this does not avoid the penalty of sometimes using a low power or inappropriate method when the data do not conform to expectation. A bias of this chapter is to examine the data to be analyzed and use this examination to guide the selection of formal test to be applied. The preliminary assessment can be through formal tests or informed by expert judgment or some combination of the two. Certainly expert judgment should be employed whenever feasible, and when used, is invaluable to sound statistical analysis. These charts provide guidance, but sound statistical judgment will sometimes lead to departures from the flowcharts.

107. The flow charts (Figures 5.1 and 5.2) are intended to include experiments which contain only two concentrations (control and one test concentration). Such experiments are generally referred to as limit tests and the methods described are applicable to these tests.

108. It should be noted that tests of hypotheses might also be required for various special-case assessments of study results (e.g., use of a contingency table to assess the significance of male-female differences in frequency of responses at some dose). These types of analyses are beyond the scope of this document.

109. The terms “dose” and “concentration” are used interchangeably in this chapter and the control is a zero dose or zero concentration group. Consistent with this, the terms “doses” and “concentrations” include the control, so that, for example, an experiment with only two concentrations has one control group and one positive concentration group.

110. The tests discussed in this chapter, with the exception of the Tamhane-Dunnett and Dunn tests, are all available in commercial software. For example, they are available in SAS version 8 and higher. The two-sided Tamhane-Dunnett test (though not called such) is available in SAS through the studentized maximum modulus distribution provided by the probmc function. Where these tests are discussed, alternatives are provided, so that the reader can follow the general guidance of this chapter without being forced to develop special programs.

111. It will be observed that there is no special flow chart for the exact Jonckheere-Terpstra and exact Wilcoxon tests. One of the appealing features of these two tests is that there are both asymptotic and exact versions and the same logic applies to both.

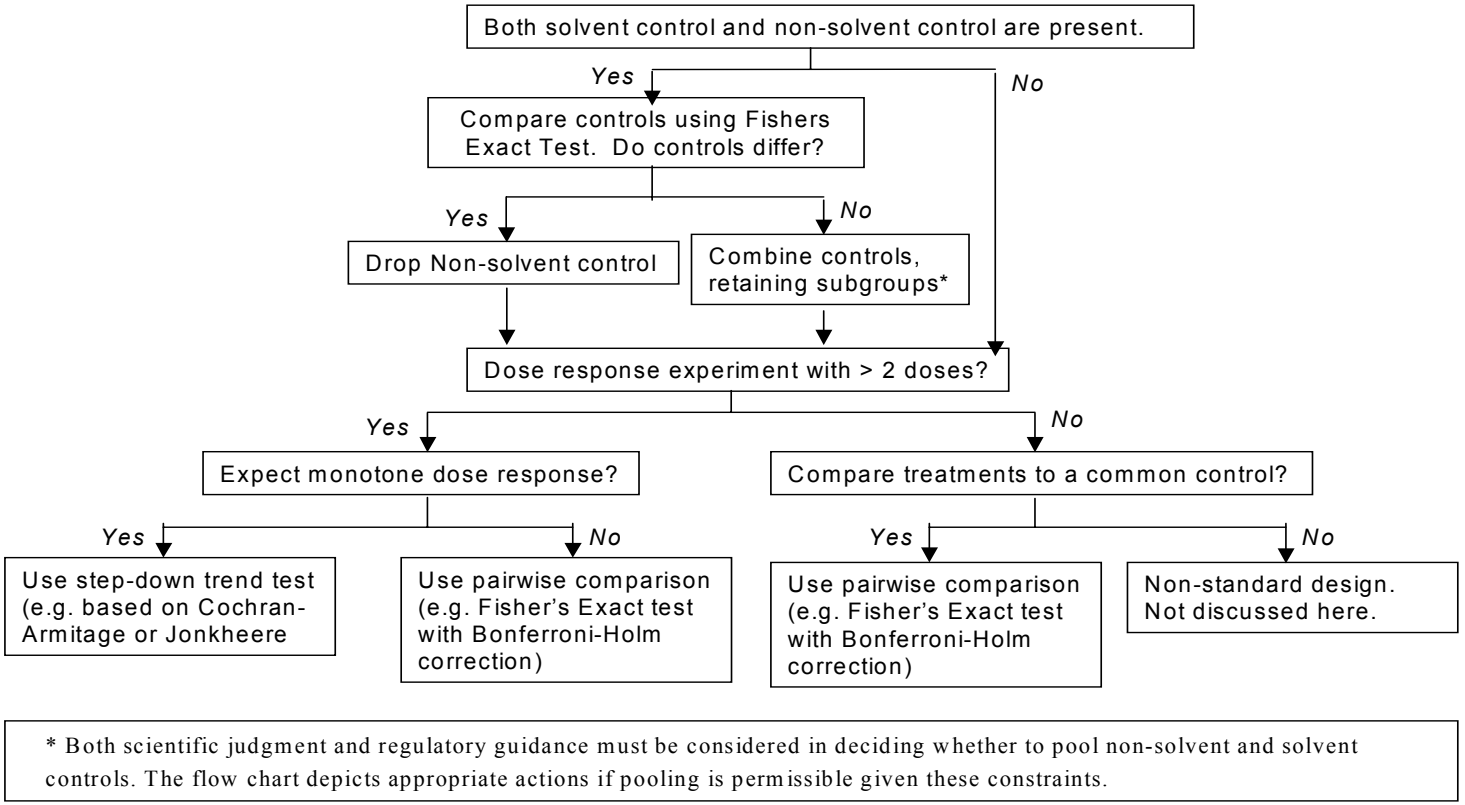

Figure 5.1. Analysis of Quantal Data: Methods for determining the NOEC. Note that the dose count in '>2' includes the control.

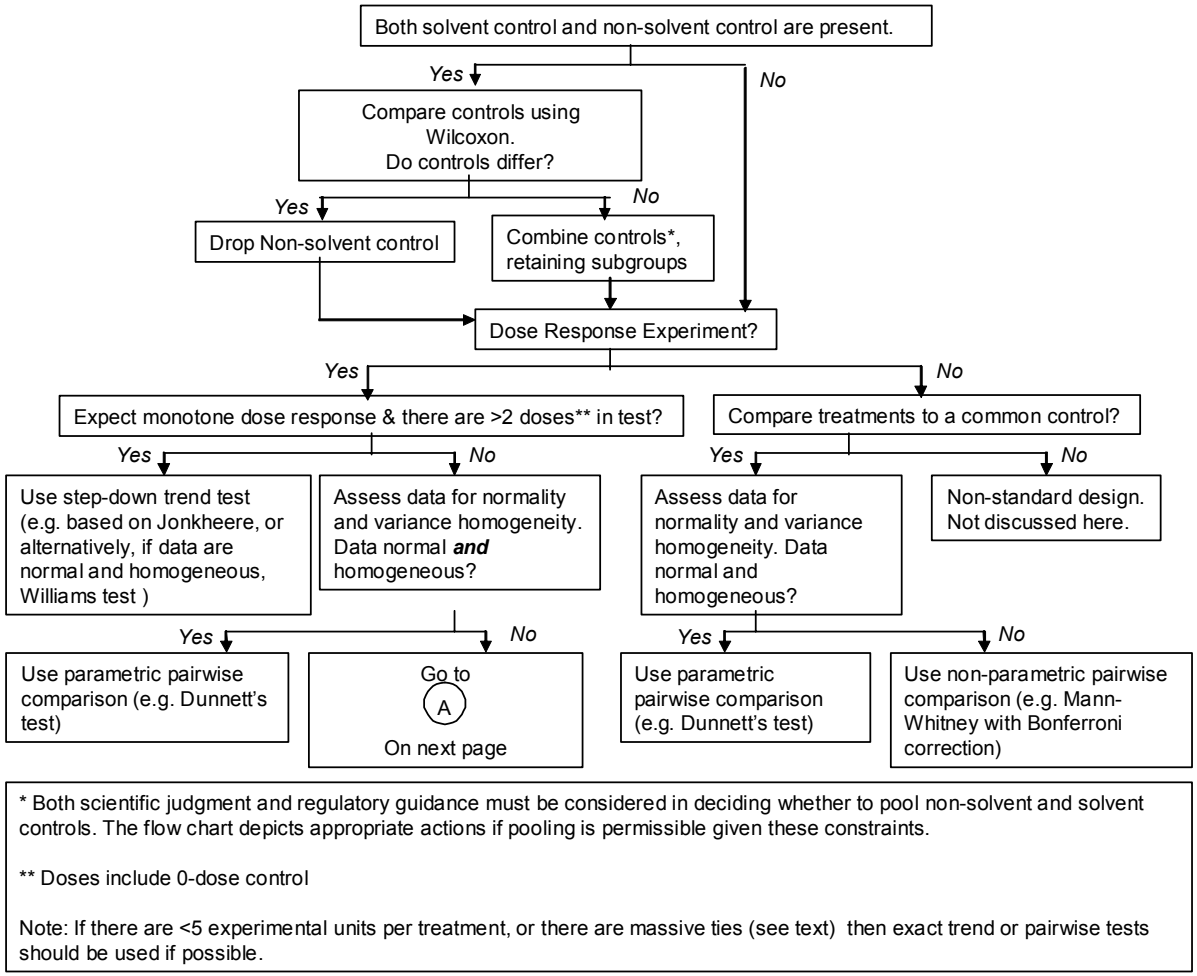

Figure 5.2. Analysis of Continuous Data: Methods for determining the NOEC

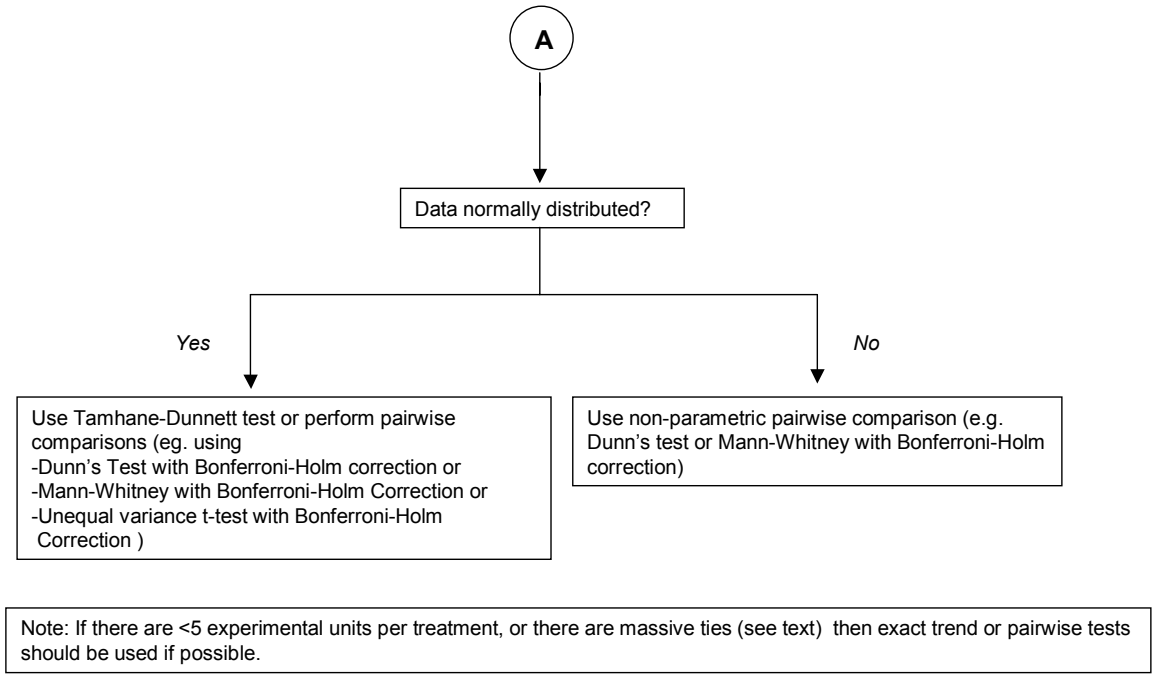

Figure 5.3. Analysis of Continuous Data: Methods for determining the NOEC.

5.1.1. The NOEC: What it is, and what it is not.

112. The NOEC is defined as the test concentration below the lowest concentration that did result in a significant effect in the specific experiment, i.e. the NOEC is the tested concentration next below the LOEC.

113. A significant effect is generally meant to be a statistically significant effect, as resulting from a hypothesis test. Obviously, no claim can be made that the condition of organisms exposed to toxicants at the NOEC is the same as the condition of organisms in the control group, or that the NOEC is an estimate of the threshold of toxicity (if such exists). Rather, no effect could be detected in this particular experiment. The detectability of an effect depends on the quality and the size of the experiment and the statistical procedure used. Of course, zero effects are never detectable. The relationship between the detectability of effects and the quality of the experiment can be quantified by the concept of statistical power. For a given null and alternative hypothesis, sample size and variance, statistical power is the probability that a particular magnitude of effect will result in a significant test outcome. In large experiments (i.e., many replicates) smaller sized effects are detectable as compared to small experiments. Thus, one may consider the detectable effect size of a particular experiment as an analogue of the detection limit of a particular chemical analysis. The detectable effect size can be increased not only by using larger sample sizes, but also by taking measures to make the experimental (residual) error smaller and by selecting more powerful statistical tests.

114. Power calculations are useful for the purpose of designing experiments in such a way that effect sizes that are considered relevant are likely to be (statistically) detected. Care must be taken when using information on the power for interpreting a NOEC. If the test was designed to detect a difference of x% and an observed treatment effect is not found statistically significant this does not allow one to conclude with a specified level of confidence that the true effect in the population is less than x%.

115. Meaningful confidence intervals for the effect size at a given concentration are sometimes possible. An application of this is discussed in section 5.1.3 and methods for doing this are developed in Annex 5.3. For some techniques, obtaining meaningful confidence intervals is very difficult and this is discussed in greater detail in that annex.

5.1.2. Hypothesis Used to determine NOEC

116. The hypothesis that is tested in determining the NOEC for a toxicological experiment reflects the risk assessment question and the assumptions that are made concerning the underlying characteristics, or statistical model, of the responses being analysed (e.g., does the response increase in an orderly (i.e., monotone) way with increasing toxicant concentration?). The statistical test that is used depends on the hypothesis tested (e.g., are responses in all groups equal?), the associated statistical model, and the distribution of the values (e.g., are data normally distributed?). Thus, it is necessary to understand the question to be answered and to translate this question into appropriate null and alternative hypotheses before selecting the test procedure.

117. The need to select a statistical model for assessing the results of toxicity tests is not unique to the hypothesis testing approach. All methods of assessment assume a statistical model. The hypothesis testing approach to evaluation of toxicity data is based in part on keeping to a reasonable number the untestable or difficult-to-test assumptions, particularly those regarding the statistical model that will be used in reaching conclusions. The models used in regression and biologically based methods use stronger assumptions than the models used in the hypothesis testing approach.

118. The simplest statistical model generally used in hypothesis testing assumes only that the distributions of responses within these populations are identical except for a location parameter (e.g., the mean or median of the distribution of values from each group). Another statistical model that is often used assumes that there is a trend in the response that is associated with increasing exposure. Each of these models suggests a set of hypotheses that can be tested to determine whether the model is consistent with the data. These two types of hypotheses can further be expressed as 1-sided or 2-sided. The discussion below is developed in terms of population means, but applies equally to hypotheses concerning population medians. The most basic hypothesis (in 1-sided form) can be stated as follows:

$H_0 : \mu_0=\mu_1=\mu_2=\ldots=\mu_k$ vs. $H_1 : \mu_0>\mu_i$ for at least one i, (model 1)

where μ_i, i=0, 1, 2, 3, …, k denote the means of the control and test *populations*, respectively.

119. Thus, one tests the null hypothesis of no differences among the population means against the alternative that at least one population mean is smaller than the control mean. There is no investigation of differences among the treatment means, only whether treatment means differ from the control mean. The one-sided hypothesis is appropriate when an effect in only one direction is a concern. The direction of the inequality in the above alternative hypothesis (i.e. in $H_1 : \mu_0>\mu_i$) would be appropriate if a decrease in the endpoint was a concern but an increase was not (for instance, if an exposure was expected to induce infertility and reduce number of offspring). If an increase in the endpoint was the only concern, then the direction of the inequality would be reversed.

Two-sided Trend Test

120. In the two-sided form of the hypothesis, the alternative hypothesis is :

$H_1 : \mu_0\neq\mu_i$ for at least one i.

Trend or Pairwise test

121. If no assumption is made about the relationships among the treatment groups and control (e.g., no trend is assumed), the test statistics will be based on comparing each treatment to the control, independent of the other treatments. Many tests have been developed for this approach, some of which will be discussed below. Most such tests were developed for experiments in which treatments are qualitatively different, as, for example, in comparing various new therapies or drug formulations to a standard.

122. In toxicology, the treatment groups generally differ only in the exposure concentration (or dose) of a single chemical. It is further often true that biology suggests that if the chemical is toxic, then as the level of exposure is increased, the magnitude effect will tend to increase. Depending on what response is measured, the effect of increasing exposure may show up as an increase or as a decrease in the measured response, but not both. The statistical model underlying this biological expectation is what will be called a trend model or a model assuming monotonicity of the population means:

$\mu_0 \geq \mu_1 \geq \mu_2 \geq \mu_3 \geq \ldots \geq \mu_k$ (or with inequalities reversed) (Model 2)

The null and alternative hypotheses can then be stated as

$H_{02} : \mu_0=\mu_1=\mu_2=\ldots=\mu_k$ vs $H_{12} : \mu_0 \geq \mu_1 \geq \mu_2 \geq \mu_3 \geq \ldots \geq \mu_k$, with $\mu_0 > \mu_k$.

Note that $\mu_0 > \mu_k$ is equivalent, under the alternative, to $\mu_0 > \mu_i$ for at least one *i*. If this monotone model is accepted as representing the true responses of test organisms to exposure to toxicants, it is not possible for, say, μ_3 to be smaller than μ_0 and μ_6 not to be smaller.

123. Under the trend model and tests designed for that model, if tests of hypotheses H_{02} vs. H_{12} reveal that μ_3 is different from μ_0, but μ_2 is not, the NOEC has been determined (i.e. it is the test concentration associated with μ_2), and there is no need to test whether μ_1 differs from μ_0. Also, finding that μ_3 differs from μ_0 implies that a significant trend exists across the span of doses including μ_0 and μ_3, the span including μ_0 and μ_4, and so on. For the majority of toxicological studies, a test of the trend hypothesis based on model (2) is consistent with the basic expectations for a model for dose-response. In addition, statistical tests for trend tend to be more powerful than alternative non-trend tests, and should be the preferred tests if they are applicable. Thus, a necessary early step in the analysis of results from a study is to consider each endpoint, decide whether a trend model is appropriate, and then choose the initial statistical test based on that decision. Only after it is concluded trend is not appropriate do specific pairwise comparisons make sense to illuminate sources of variability.

124. Toxicologists sometimes do not know whether a compound will cause measurements of continuous variables such as growth or weight to increase or decrease, but they are confident it will act in only one direction. For such endpoints, the 2-sided trend test is appropriate, described in 5.1.6. One difference between implementing step-down procedures for quantal data and continuous data is that two-sided tests are much more likely to be of interest for continuous variables. Such a model is rarely appropriate for quantal data, as only increased incidence rate above background (control) incidence are of interest in toxicology.

125. The two-sided version of the step-down procedure is based on the underlying model:

$$\mu_0 \geq \mu_1 \geq \mu_2 \geq \mu_3 \geq \ldots \geq \mu_k$$

or

$$\mu_0 \leq \mu_1 \leq \mu_2 \leq \mu_3 \leq \ldots \leq \mu_k.$$

126. Under this model, in testing the hypothesis that all population means are equal against the alternative that at least one inequality is strict, one first tests separately each 1-sided alternative at the 0.025-level of significance with all doses present. If neither of these tests is significant, the NOEC is higher than the highest concentration. If both of these tests are significant, a trend-based procedure should not be used, as the direction of the trend is unclear. If exactly one of these tests with all the data is significant, then the direction of all further tests is in the direction of the significant test with all groups. Thereafter, the procedure is as in the 1-sided test, except all tests are at the 0.025 significance level to maintain the overall 0.05 false positive rate.

127. Where it is biologically sensible, it is preferable to test the one-sided hypothesis, because random variation in one direction can be ignored, and as a result, statistical tests of the one-sided hypothesis are more powerful than tests of the two-sided hypothesis.

128. Note that a hypothesis test based on model 2 assumes only a monotone dose-response rather than a precise mathematical form, such as is required for regression methods (Chapter 6) or the biologically based models (Chapter 7).

5.1.3. Comparisons of single-step (pairwise comparisons) or step-down trend tests to determine the NOEC

129. In general, determining the NOEC for a study involves multiple tests of hypotheses (i.e., a family of hypotheses is tested), either pairwise comparisons of treatment groups, or a sequence of tests of the significance of trend. For that reasons, statisticians have developed tests to control the family-wise error rate, FWE, (the probability that one or more of the null hypotheses in the family will be rejected incorrectly) in the multiple comparisons performed to identify the NOEC. For example, suppose one compares each of ten treatments to a common control using a simple t-test with a false positive error rate of 5% for each comparison. Suppose further that none of the treatments has an effect, i.e., all of the treatment and control population means are equal. For each comparison, there is a 5% chance of finding a significant difference between that sample treatment mean and the control. The chance that at least one of the ten comparisons is wrongly declared significant is much higher, possibly as high as $1-.95^{10}=0.4$ or 40%. The method of controlling the family-wise error rate has important implications for the power of the test. There are two approaches that will be discussed: single-step procedures and step-down procedures. There are numerous variations within each of these two classes of procedures that are suited for specific data types, experimental designs and data distributions.

130. A factor that must be considered in selecting the methods for analysing the results from a study is whether the study is a dose-response experiment. In this context, a dose-response experiment is one in which treatments consist of a series of increasing doses of the same test material. Monotone responses from a dose-response experiment are best analysed using step-down procedures based on trend tests (e.g., the Cochran-Armitage, Williams, or Jonckheere-Terpstra trend test), whereas non-monotone responses must be analysed by pairwise comparisons to the control (e.g., Fisher's exact test or Dunnett's test). This section will discuss when to use each of these two approaches.

131. *Single-step procedures* amount to performing all possible comparisons of treatment groups to the control. Multiple comparisons to the control may be made, but there is no ordered set of hypotheses to test, and no use of the sequence of outcomes in deciding which comparisons to make. Examples of the single-step approach include the use of the Fisher's exact test, the Mann-Whitney, Dunnett and Dunn tests. Since many comparisons to the control are made, some adjustment must be made for the number of such comparisons to keep the family-wise error (FWE) rate at a fixed level, generally 0.05. With tests that are inherently single comparison tests, such as Fisher's exact and Mann-Whitney, a Bonferroni adjustment can be made: a study with k treatment levels would be analysed by performing the pair-wise comparisons of each of the treatment groups to the control group, each performed at a significance level of α/k instead of α. (This is the Bonferroni adjustment.) Equivalently, the calcutaed p-value ignoring multiplicities is multiplied by k. That is, $p^b_i = k*p_i$ The Bonferroni adjustment is generally overly conservative, especially for large k. Modifications reduce the conservatism while preserving the FWE at 0.05 or less.

132. For the Holm modification of the Bonferroni adjustment, arrange the k unadjusted p-values for all comparisons of treatments to control in rank order, i.e., $p_{(1)} \leq p_{(2)} \leq p_{(3)} \leq \ldots \leq p_{(k)}$. Beginning with $p_{(1)}$, compare $p_{(i)}$ with $\alpha/(k-i+1)$, stopping at the first non-significant comparison. If the smallest i for which $p_{(i)}$ exceeds $\alpha/(k-i+1)$ is $i=j$, then all comparisons with $i>j$ are judged non-significant without further comparisons. It is helpful (Wright (1992)) to report adjusted p-values rather than the above comparisons. Thus, report $p^*_{(1)} = p_{(1)}*(k-i+1)$ and then compare each adjusted p-value to α. Table 5.1 illustrates the advantage of the Bonferroni-Holm method. In this hypothetical example, only the comparison of treatment 4 with the control would be significant if the Bonferroni adjustment is used, whereas all comparisons except the comparison of the Control with treatment 1 would be significant if the Bonferroni-Holm adjustment is used.

Comparison	Unadjusted *p* value	Bonferroni-Holm Adjusted *p* value $p^*_{(i)}$	Bonferroni Adjusted p-values P^b_i
Control – Treatment 4	$p_{(1)}$=0.002	0.002*4=0.008	0.002*4=0.008
Control – Treatment 2	$p_{(2)}$=0.013	0.013*3=0.039	0.013*4=0.052
Control – Treatment 3	$p_{(3)}$=0.020	0.020*2=0.040	0.02*4=0.08
Control – Treatment 1	$p_{(4)}$=0.310	0.310*1=0.310	0.310*4=1.

Table 5.1 Comparison of Adjusted and Unadjusted P-Values

133. Alternatives based on the Sidak inequality (each comparison at level $1-(1-\alpha)^k$) are also available. The Bonferroni and Bonferroni-Holm adjustment guarantee that the family-wise error rate is less than α, but they are conservative. Other tests, such as Dunnett's, have a "built-in" adjustment for the number of comparisons made and are less conservative (hence, more powerful). For completeness, it should be understood that if only one comparison is made, the Bonferroni and Bonferroni-Holm adjustments leave the p-value unchanged. Of course, there is no need to refer to an adjustment in this simple case, but the discussion becomes needlessly complicated if special reference is always made to the case of only one comparison.

134. *Step-down procedures* are generally preferred where they are applicable. All step-down procedures discussed are based on a sequential process consisting of testing an ordered set of hypotheses concerning means, ranks, or trend. A step-down procedure based on trend (for example) works as follows: First, the hypothesis that there is no trend in response with increasing dose is tested when the control and all dose groups are included in the test. Then, if the test for trend is significant, the high dose group is dropped from the data set, and the hypothesis that there is no trend in the reduced data set is tested. This process of dropping treatment groups and testing is continued until the first time the trend test is non-significant. The highest dose in the reduced data set at that stage is then declared to be the NOEC. Distinguishing features of step-down procedures are that the tests of hypothesis must be performed in a given order, and that the outcome of each hypothesis test is evaluated before deciding whether to test the next hypothesis in the ordered sequence of hypotheses. It is these two aspects of these procedures that account for controlling the family-wise error (FWE) rate.

135. A step-down method typically uses a critical level larger than that used in single-step procedures, and seeks to limit the number of comparisons that need to be made. Indeed, the special class of "fixed-sequence" tests described below fix the critical level at 0.05 for each comparison but bound the FWE rate at 0.05. Thus, step-down methods are generally preferable to the single-step methods as long as the response means are monotonic.

136. Tests based on trend are logically consistent with the anticipated monotone pattern of responses in toxicity tests. Step-down procedures make use of this ordered alternative by ordering the tests of hypotheses. This minimises the number of comparisons that need to be made, and in all the methods discussed here, a trend model is explicitly assumed (and tested) as a part of the procedure.

137. Procedures that employ step-down trend tests have more power than procedures that rely on multiple pairwise comparisons when there is a monotone dose-response because they make more use of the biology and experimental design being analysed. When there is a monotone dose-response, procedures that compare single treatment means or medians against the control, independent of the results in other

treatments (i.e. single-step procedures), ignore important and relevant information, and suffer power loss as a result.

138. The trend models used in the step-down procedures do not assume a particular precise mathematical relationship between dose and response, but rather use only monotonicity of the dose-response relationship. The underlying statistical model assumes a monotone dose-response in the *population* means, not the *observed* means.

139. Rejection of the null hypothesis (i.e., rejecting the hypothesis that all group means, or medians, or distributions are equal) in favour of the stated alternative implies that the high dose is significantly different from the control. The same logic applies at each stage in the step-down application of the test to imply, whenever the test is significant, that the high dose remaining at that stage is significantly different from the control. These tests are all applied in a 1-sided manner with the direction of the alternative hypothesis always the same. Moreover, this methodology is general, and applies to any legitimate test of the stated hypotheses under the stated model. That is, one can use this fixed-sequence approach with the Cochran-Armitage test on quantal data, the Jonckheere-Terpstra or Williams or Brown-Forsythe tests of trend on continuous data. Other tests of trend can also be used in this manner.

140. *Deciding between the two approaches* Bauer (1997) has shown that certain tests based on a monotone dose-response can have poor power properties or error rates when the monotone assumption is wrong. For example, departures from monotonicity in non-target plant data are common, where they arise from low dose stimulation. Davis and Svendsgaard (1990) suggest that departures from monotonicity may be more common than previously thought.. These results suggest that a need for caution exists. There are two testing philosophies used to determine whether a monotone dose-response is appropriate. Some recommend assessing in a general way for an endpoint or class of endpoints, whether a monotone dose-response is to be expected biologically. If a monotone trend is expected, then trend methods are used. This procedure should be augmented, at a minimum, by adding that, if a cursory examination of the data shows strong evidence of departure from monotonicity (i.e., large, consistent departures), then pairwise methods should be used instead.

141. A second philosophy recommends formal tests to determine if there is significant monotonicity or significant departure from monotonicity. With continuous data, one can use either a positive test for monotonicity (such as Bartholomew's test) and proceed only if there is evidence of monotonicity, or use a "negative" test for departure from monotonicity (such as sets of orthogonal contrasts for continuous responses and a decomposition of the chi-square test of independence for quantal responses) and proceed unless there is evidence of non-monotonicity. Details on these procedures are given in Annexes 5.1 and 5.3. Either philosophy is acceptable. The second approach is grounded in the idea that monotonicity is the rule and that it should take strong evidence to depart from this rule. Both approaches reduce the likelihood of having to explain a significant effect at a low or intermediate concentration when higher concentrations show no such effect. The "negative" testing approach is more consistent with the way tests for normality and variance homogeneity are used and is more likely to result in a trend test than a method that requires a significant trend test to proceed. This is what is shown in the flow diagrams presented below.

142. Formal tests for monotonicity are especially desirable in a highly automated test environment. One simple procedure that can be used in this situation for continuous responses is to construct linear and quadratic contrasts of normalised rank statistics (to avoid the complications that can arise from non-normal or heterogeneous data). If the linear contrast is not significant and the quadratic contrast is significant, there is evidence of possible non-monotonicity that calls for closer examination of the data or pairwise comparison methods. Otherwise, a trend-based analysis is used. A less simple, but more elegant procedure would be to construct simultaneous confidence intervals for the mean responses assuming monotonicity (i.e., isotonic estimators based on maximum likelihood criteria – see Annex 5.3) and use a trend approach

unless one or more sample (i.e., non-isotonic) means fall outside the associated confidence interval. For quantal data using the Cochran-Armitage test, there is a built-in test for lack of monotonicity.

143. Where expert judgement is used, formal tests for monotonicity or its lack may be replaced by visual inspection of the data, especially of the mean or median responses. The same concept applies to assessing normality and variance homogeneity.

5.1.4. Dose metric in trend tests

144. Various authors have evaluated the influence on trend tests of the different ways of expressing dose (i.e. dose metrics), including actual dose-values, log(dose), and equally-spaced scores (i.e., rank-order of doses). Lagakos and Lewis (1985) discuss various dose metrics and prefer the rank-order as a general rule. Weller and Ryan (1998) likewise prefer rank ordering of doses for some trend tests.

145. When dose values are approximately equally spaced on a log scale, there is little difference between using log(dose) and rank-order, but use of actual dose values can have the unintended effect of turning a trend test into a comparison of high dose to control, eliminating the value of the trend approach and compromising its power properties. This is not an issue with some tests, such as the Jonckheere-Terpstra test discussed below, since rank-order of treatment groups is built into the procedure. With others, such as Cochran-Armitage and contrast-based tests, it is an important consideration.

146. Extensive computer simulations have been done (J. W. Green, in preparation) to compare the use of rank-order to dose-value in the Cochran-Armitage test. One simulation study involved over 88,000 sets of dose-response scenarios for 4- and 5-dose experiments found 12-17% of the experiments where the rank-order scoring found lower NOEC than dose-value did and only 1% of the experiments where dose-value scores lead to lower NOEC than when rank-order scores were used. In the remaining cases, the two methods established the same NOEC. While these simulations results do not, by themselves, justify the use of rank-order over actual dose levels or their logarithms, they do suggest that use of rank-order will not lessen the power of statistical tests. All trend based tests discussed in this document, including contrast tests for monotonicity, are based on rank ordering of doses.

5.1.5. The Role of Power in Toxicity Experiments

147. The adequacy of an experimental design and the statistical test used to analyse study results are often evaluated in terms of the power of the statistical test. Power is defined as the probability that a false null hypothesis will be rejected by the statistical test in favour of a true alternative. That power depends on the alternative hypothesis. In the context of toxicology, the larger the effect, the higher the power to detect that effect. So, if a toxicant has had some effect on the organisms in a toxicity test, power is the probability that a difference between treatment groups and the control will be detected. The power of a test can be calculated if we know the size of the effect to be detected, the variability of the endpoint measured, the number of treatment groups, and the number of replicates in each treatment group. (Detailed discussions are given in sections 5.2 and 5.3 and Annexes 5.1 and 5.3).

148. It should be understood that the goal of selecting a method for determining a NOEC is not to find the most powerful method. Rather, the focus should be on selecting methods most appropriate for the data and end result. Power is certainly an ingredient in this selection process. As discussed below, power can be used in designing experiments and selecting statistical tests to reduce animal use without loss of statistical power. This can be accomplished by selecting an inherently more powerful test applied to fewer animals, so that the result is to retain the power of more traditional tests but use fewer animals.

149. The primary use of power analysis in toxicity studies is in the design stage. By demonstrating that a study design and test method have adequate power to detect effects that are large enough to be deemed

important, if we then find that, at a given dose, there is no statistically significant effect, we can have some confidence that there is no effect of concern at that dose. However, power does not quantify this confidence. Failure to adequately design or control an experiment so that statistical tests have adequate power can result in large effects being found to be statistically insignificant. On the other hand, it is also true that a test can be so powerful that it will find statistically significant effects of little importance.

150. Deciding on what effect size should be considered to be large enough to be important is difficult, and may depend on both biological and regulatory factors. In some cases, the effect size may be selected by regulatory agencies or specified in guidelines.

151. A requirement to demonstrate an adequate power to detect effects of importance will remove any perceived reward for poor experimental design or technique, as poor experimental design will be shown to have low power to detect important effects, and will lead to the selection of more powerful statistical tests and better designs. The latter will be preferable to the alternative of increasing sample sizes. Indeed, it is sometimes possible to find statistical procedures with greater power to detect important differences or provide improved estimates and simultaneously decrease sample sizes.

152. For design purposes, the background variance can be taken to be the pooled within-experiment variance from a moving frame of reference from a sufficiently long period of historical control data with the same species and experimental conditions. The time-window covered by the moving frame of reference should be long enough to average out noise without being so long that undetected experimental drift is reflected in the current average. If available, a three-to-five year moving frame of reference might be appropriate. When experiments must be designed using more limited information on variance, it may be prudent to assume a slightly higher value than what has been observed. Power calculations used in design for quantal endpoints must take the expected background incidence rate into account for the given endpoint, as both the Fisher Exact and Cochran-Armitage test are sensitive to this background rate, with highest power achieved for a zero background incidence rate. The background incidence rate can be taken to be the incidence rate in the same moving frame of reference already mentioned.

153. While at the design stage, power must, of necessity, be based on historical control data for initial variance estimates, it may also be worthwhile to do a post-hoc power analysis as well to determine whether the actual experiment is consistent with the criteria used at the design stage. Care must be taken in evaluating post-hoc power against design power. Experiment-to-experiment variation is expected and variance estimates are more variable than means. The power determination based on historical control data for the species and endpoint being studied should be reported.

154. Alternatively, for experimental designs constructed to give an acceptable power based on an assumed variance rather than on historical control data, a post-hoc test can be done to compare the observed variance to the variance used in designing the experiment. If this test finds significantly higher observed variance (e.g., based on a chi-square or F-test) than that used in planning, then the assumptions made at design time may need to be reassessed.

5.1.6. Experimental design

155. Factors that must be considered when developing experimental designs include the number and spacing of doses or exposure levels, the number of subjects per dose group, and the nature and number of subgroups within dose groups. Decisions concerning these factors are made so as to provide adequate power to detect effects that are of a magnitude deemed biologically important.

156. The choice of test substance concentrations is one aspect of experimental design that must be evaluated for each individual study. The goal is to bracket the NOEC with concentrations that are as

closely spaced as practical. If limited information on the toxicity of a test material is available, test concentrations or doses can be selected to cover a range somewhat greater than the range of exposure levels expected to be encountered in the field and should include at least one concentration expected not to have a biologically important effect. If more information is available this range may be reduced, so that doses can be more closely spaced. Where effects are expected to increase approximately in proportion to the log of concentration, concentrations should be approximately equally spaced on a log scale. Three to seven concentrations plus concomitant controls are suggested, with the smaller experiment size typical for acute tests and larger experiment sizes most appropriate when preliminary dose-finding information is skimpy.

157. The trade-off between number of subjects per subgroup and number of subgroups per group should be based on power calculations using historical control data to estimate the relative magnitude of within- and among- subgroup variation and correlation. If there are no subgroups, then there is no way to distinguish housing effects from concentration effects and neither between- and within-group variances or nor correlations can be estimated, nor is it possible to apply any of the statistical tests described for continuous responses to subgroup means other than the Jonckheere-Terpstra test. Thus, a minimum of two subgroups per concentration is recommended; three subgroups are much better than two; four subgroups are better than three. The improvement in modelling falls off substantially as the number of subgroups increases beyond four. (This can be understood on the following grounds. The modelling is improved if we get better estimates of both among- and within-subgroup variances. The quality of a variance estimate improves as the number of observations on which it is based increases. Either sample variance will have, at least approximately, a chi-squared distribution. The quality of a variance estimate can be measured by the width of its confidence interval and a look at a chi-squared table will verify the statements made.) The precise needs for a given experiment will depend on factors such as the relative and absolute size of the between- and within-replicate variances. Examples 1 and 2 in Annex 5.3 illustrate the trade-offs between replicates per concentration and subjects per replicate.

158. In any event, the number of subgroups per concentration and subjects per subgroup should be chosen to provide adequate power to detect an effect of magnitude judged important to detect. This power determination should be based on historical control data for the species and endpoint being studied.

159. Since the control group is used in every comparison of treatment to control, consideration should be given to allocating more subjects to the control group than to the treatment groups in order to optimise power for a given total number of subjects. The optimum allocation depends on the statistical test to be used. A widely used allocation rule was given by Dunnett (1955), which states that for a total of N subjects and k treatments to be compared to a common control, if the same number, n, of subjects are allocated to every treatment group, then the number, n_0, to allocate to the control to optimise power is determined by the so-called square-root rule. By this rule, the value of n is (the integer part of) the solution of the equation $N= kn + n\sqrt{k}$, and $n_0 = N - kn$. [It is almost equivalent to say $n_0 = n\sqrt{k}$.] This has been shown to optimise power for Dunnett's test. It is used, often without formal justification, for other pairwise tests, such as the Mann-Whitney and Fisher exact test. Williams (1972) showed that the square-root rule may be somewhat sub-optimal for his test and optimum power is achieved when $\sqrt{k}$ in the above equation is replaced by something between $1.1\sqrt{k}$ and $1.4\sqrt{k}$.

160. The optimality of the square-root rule to other tests, such as Jonckheere-Terpstra and Cochran-Armitage has not been published in definitive form, but simulations (manuscript in preparation by J. W. Green) show that for the step-down Jonckheere-Terpstra test, power gains of up to 25% are common under this rule compared to results from equal sample sizes. In all cases examined, the power is greater following this rule compared to equal sample sizes, where the total sample size is held constant In the absence of definitive information on the Jonckheere-Terpstra and other tests, it is probably prudent to follow the

square-root rule for pairwise, Jonckheere-Terpstra and Cochran-Armitage tests and either that or Williams' modification of the rule for other step-down procedures.

161. The selection of an allocation rule is further complicated in experiments where two controls are used, since if the controls are combined for further testing, a doubling of the control sample size is already achieved. Since experience suggests that most experiments will find no significant difference between the two controls, the optimum strategy for allocating subjects is not necessarily immediately clear. This of course would not apply if a practice of pooling of controls is not followed.

162. The reported power increases from allocating subjects to the control group according to the square root rule do not consider the effect of any increase in variance as concentration increases. One alternative, not without consequences in terms of resources and treatment of animals, is to add additional subjects to the control group without subtracting from treatment groups. There are practical reasons for considering this, since a study is much more likely to be considered invalid when there is loss of information in the controls than in treatment groups.

5.1.7. Treatment of Covariates and Other Adjustments to Analysis

163. It is sometimes necessary to adjust the analysis of toxicity data by taking into account some restriction on randomisation, compartmentalisation (housing) or by taking into account one or more covariates that might affect the conclusions. Examples of potential covariates include: initial body weights, initial plant heights, and age at start of test. While a thorough treatment of this topic will not be presented, some attention to this topic is in order.

164. For continuous, normally distributed responses with homogeneous variances, analysis of covariance (ANCOVA) is well developed. Hocking (1985) and Milliken and Johnson (1984) are among the many references on this topic. For continuous responses that do not meet the normality or homogeneity requirements, non-parametric ANCOVA is available.

165. Shirley (1981) indicates why nonparametric methods are needed in some situations. Stephenson and Jacobson (1988) contain a review of papers on the subject up to 1988. Subsequent papers include Wilcox (1991) and Knoke (1991). Stephenson and Jacobson recommend a procedure that replaces the dependent variable with ranks but retains the actual values of the independent variable(s). This has proved useful in toxicity studies. Seaman et al (1985) discuss power characteristics of some non-parametric ANCOVA procedures.

166. When the response variable is quantal and is assumed to follow the binomial distribution, ANCOVA can be accomplished through logistic regression techniques. In this case, the covariate is a continuous regressor variable and the dose groups are coded as 'dummy variables.' This approach can be more generally described in the Generalized Linear Model (GLM) framework (McCullagh and Nelder (1989)). For quantal data, Koch et al (1998), Thall and Vail (1990), Harwell and Serlin (1988), Tangen and Koch (1999a, 1999b) consider some relevant issues.

167. Adjustments must be made to statistical methods when there are restrictions on randomisation of subjects such as housing of subjects together. This is discussed for both quantal and continuous data in sections 5.2.2.6, 5.2.3, and 5.3.2.7, where the possibility of correlations among subjects housed together is considered, as are strategies for handling this problem. In the simple dose-response designs being discussed in this chapter, other types of restrictions on randomisation are less common. However, there is a large body of literature on the treatment of blocking and other issues that can be consulted. Hocking (1985) and Milliken and Johnson (1984) contain discussions and additional references.

168. Transformation of the doses (i.e. *not* response measures) in hypothesis testing is restricted, in this chapter, to the use of rank order of the doses. For many tests, the way that dose values (actual or rank order) are expressed has no effect on the results of analysis. An exception is the Cochran-Armitage test. (See Annex 5.1)

5.2. Quantal data (e.g., Mortality, Survival)

5.2.1. Hypothesis testing with quantal data to determining NOEC values

169. Selection of methods and experimental designs in this chapter for determining NOEC values focuses on identifying the tests most appropriate for detecting effects. The appropriateness of a given method hinges on the design of the experiment and the pattern of responses of the experimental units. Figure 5.1 illustrates an appropriate scheme for method selection, and identifies several statistical methods that are described in detail below. There are, of course, other statistical procedures that might be chosen. The following discussion identifies many of the procedures that might be used, gives details of some of the most appropriate, and attempts to provide some insight into the strengths and weaknesses of each method.

170. If there are two negative controls (i.e., solvent and non-solvent) Fisher's exact test applied just to the two controls is used to determine whether the two groups differ wherever it is appropriate to analyse individual sampling units. Where replicate means or medians are the unit for analysis, the Mann-Whitney rank sum test can be used. Further discussion of when each approach is appropriate is given in sections 5.2.2 and 5.2.2.3. Section 4.2.3 contains discussions of issues regarding multiple controls in an ecotoxicity study.

171. Figure 5.1 identifies a number of powerful methods for the analysis of quantal data. There are, of course, other statistical procedures that might be chosen. The following discussion identifies many of the procedures that might be used, gives details of some of the most appropriate, and attempts to provide some insight into the strengths and weaknesses of each method.

172. The methods used for determining NOEC values on quantal data can be categorised according to whether the tests involved are parametric or non-parametric and whether the methods are single-step or step-down. Table 5.2 lists methods that can be used to determine NOEC values. Some of these methods are applicable only under certain circumstances, and some methods are preferred over the others.

173. Except for the two Poisson tests, those tests listed in the column "Parametric" can be performed only when the study design allows proportion of organisms responding in replicated experimental units to be calculated (i.e. there are multiple organisms within each of multiple test vessels within each treatment group). Such a situation yields multiple responses, namely proportions, for each concentration, and these proportions can often be analysed as continuous. For very small samples, such a practice is inappropriate.

174. Typically, if responses increase or remain constant with increasing dosage, the trend-based methods perform better than pairwise methods, and for most quantal data, a step-down approach based on the Cochran-Armitage test is the most appropriate of the listed techniques. The strengths and weaknesses of most listed methods are discussed in more detail below.

	Parametric	Non-Parametric
Single-Step (Pair-wise)	Dunnett Poisson comparisons	Mann-Whitney with Bonferroni-Holm adjustments. Chi-squared with Bonferroni-Holm adjustment Steel's Many-to-One Fisher's exact test with Bonferroni-Holm adjustment.
Step-down (Trend based)	Poisson Trend Williams Bartholomew Welsch Brown-Forsythe Sequences of linear contrasts	Cochran-Armitage Jonckheere-Terpstra test Mantel-Haenszel

Table 5.2 Methods used for determining NOEC values with quantal data.

All listed single-step methods are based on pair-wise comparisons, and all step-down methods are based on trend-tests. The tests listed in Table 5.2 are well established as tests of the stated hypothesis in the statistics literature. *Note:* (The Mann-Whitney test is identical to the Wilcoxon rank-sum test.)

5.2.2. Parametric versus non-parametric tests

175. Parametric tests are based on assumptions that the responses being analysed follow some given theoretical distribution. Except for the Poisson methods, the tests listed in Table 5.2. as parametric all require that the data be approximately normally distributed (possibly after a transformation).The normality assumption can be met for quantal data only if the experimental design includes treatment groups that are divided into subgroups, the quantal responses are used to calculate proportions responding in each of the subgroups, and these proportions are the observations analysed. These proportions are usually subjected to a normalising transformation (see sections 4.32, 4.33, and 4.34), and a weighted ANOVA is performed, perhaps with weights proportional to subgroup sizes (Cochran (1943)). (It is noteworthy that some statistical packages, such as SAS version 6, do not always perform multiple comparisons within a weighted ANOVA correctly.) This approach limits the possibilities of doing trend tests to those based on contrasts, including Welsch and Brown-Forsythe tests (Roth (1983); Brown and Forsythe (1974)). Non-trend tests include versions of Dunnett's test for pairwise comparisons allowing for unequal variances (Dunnett (1980); Tamhane (1979)). These methods may not perform satisfactorily for quantal data, partly due to a loss of power in analysing subgroup proportions. An example is given on Annex 5.1.

176. The Cochran-Armitage test is listed as non-parametric even though it makes explicit use of a presumed binomial distribution of incidence within treatment groups. Some reasons for this are given in Annex 5.1. Fisher's Exact test is likewise listed as non-parametric, even though it is based on the geometric distribution. The Jonckheere-Terpstra test applied to subgroup proportions is certainly non-parametric. An advantage of Jonckheere-Terpstra over the cited parametric tests is that the presence of many zeros poses no problem for the analysis and it provides a powerful step-down procedure in both large- and small-sample problems, provided the number of subgroups per concentration is not too small. An example in Annex 5.3 will illustrate this concern.

5.2.2.1. Single-step procedures

177. Suitable single-step approaches for quantal data are Fisher's exact test and the Mann-Whitney test to compare each treatment group to the control, independently of other treatment groups, with Bonferroni-Holm adjustment. Details of these tests are given in annex 5.1.

5.2.2.2. Step-Down Procedures

178. Suitable step-down procedures for quantal data are based on the Cochran-Armitage and Poisson trend tests. First, a biological determination is made whether or not to expect a monotone dose-response. If that judgement is to expect monotonicity, then the step-down procedure described below is followed unless the data strongly indicates non-monotonicity. If the judgement is not to expect monotonicity, then Fisher's exact test is used.

179. An analysis of quantal data is based on the relationships between the response (binary) variable and factors. In such cases, the Pearson Chi-Square (χ^2) test for independence can be used to find if any relationships exist.

180. Test for monotone dose-response: If one believes on biological grounds that there will be a monotone dose-response, then the expected course of action is to use a trend test. However, statistical procedures should not be followed mindlessly. Rather, one should examine the data to determine whether it is consistent with the plan of action. There is a simple and natural way to check whether the dose-response is monotone. The *k-1* df Pearson Chi-Square statistic decomposes into a test for linear trend in the dose-response and a measure of lack of fit or lack of trend, $\chi^2_{(k-1)} = \chi^2_{(1)} + \chi^2_{(k-2)}$ where $\chi^2_{(1)}$ is the calculated Cochran-Armitage linear trend statistic and $\chi^2_{(k-2)}$ is the Chi-Square statistic for lack of fit. The details of the computations are provided in annex 5.1.

181. If the trend test is significant when all doses are included in the test, then proceed with a trend-based step-down procedure. If the trend test with all doses included is not significant but the test for lack of fit is significant, then this indicates that there are differences among the dose groups but the dose-response is not monotone. In this event, even if we expected a monotone dose-response biologically, it would be unwise to ignore the contrary evidence and one should proceed with a pairwise analysis.

182. The Cochran-Armitage trend test is available in several standard statistical packages including SAS and StatXact. StatXact also provides exact power calculations for the Cochran-Armitage trend test with equally spaced or arbitrary doses.

183. The step-down procedure: A suitable approach to analysing monotonic response for quantal data is as follows. Perform a Cochran-Armitage test for trend on responses from all treatment groups including the control. If the Cochran-Armitage test is significant at the 0.05 level, omit the high dose group, re-compute the Cochran-Armitage and Chi-Squared tests with the remaining dose groups. Continue this procedure until the Cochran-Armitage test is first non-significant at the 0.05 level. The highest concentration remaining at this stage is the NOEC.

184. Possible Modifications of the Step-Down Procedure: There are two possible modifications to consider to the above. First, as noted by Cochran (1943), Fisher's Exact test is more powerful for comparing two groups than the Cochran-Armitage test when the total number of subjects in the two groups is less than 20 and also when that total is less than 40 and the expected frequency of any cell is less than 5. This will include most laboratory ecotoxicology experiments. For this reason, if the step-down procedure described above reaches the last possible stage, where all doses above the lowest tested dose are significant, then we can substitute Fisher's exact test for Cochran-Armitage for the final comparison on the

grounds that it is a better procedure for this single comparison. Such substitution does not alter the power characteristics or theoretical justification of the Cochran-Armitage test for doses above the lowest dose, but it does improve the power of the last comparison.

185. Second, if the step-down procedure terminates at some higher dose because of a non-significant Cochran-Armitage test, but there is at this stage a significant test for lack of monotonicity, one should consider investigating the lower doses further. This can be done by using Fisher's exact test to compare the remaining dose groups to the control, with a Bonferroni-Holm adjustment. The Bonferroni-Holm adjustment would take into account only the number of comparisons actually made using Fisher's exact test. The inclusion of a method within the step-down procedure to handle non-monotonic results at lower doses is suggested for quantal data (but not for continuous data) for two reasons. First, there is a sound procedure built into the decomposition of the Chi-squared test for assessing monotonicity that is directly related to the Cochran-Armitage test. Secondly, experience suggests that quantal responses are more prone to unexpected changes in incidence rates at lower doses than continuous responses, so that a strict adherence to a pure step-down process may miss some adverse effects of concern.

5.2.2.3. Alternative Procedures

186. These following parametric and nonparametric procedures are discussed because under some conditions, a parametric analysis of subgroup proportions may be the only viable procedure. This is especially true if there are also significant differences in the number of subjects within each subgroup, making analysis of means or medians problematic by other methods.

187. Pairwise ANOVA (weighted by subgroup size) based methods performed on proportion affected have sometimes been used to determine NOEC values. While there can be problems with these proportion data meeting some of the assumptions of ANOVA (e.g., variance homogeneity), performing the analysis on proportion affected opens up the gamut of ANOVA type methods, such as Dunnett's test and methods based on contrasts. Failure of data to satisfy the assumption of homogeneity of variances can often be corrected by the use of an arcsine-square-root or other normalising and variance stabilising transformation. However, this approach tends to have less power than step-down methods designed for quantal data that are described above, and is especially problematic for very small samples. These ANOVA based methods may not be very powerful and are not available if there are not distinct subgroups of multiple subjects each within each concentration. Williams' test is a trend alternative that can be used, when data are normally distributed with homogeneous variance.

188. A nonparametric trend test that can be used to analyse proportion data is the Jonckheere-Terpstra trend test, which is intended for use when the underlying response on each subject is continuous and the measurement scale is at least ordinal. The most common application in a toxicological setting is for measures such as size, fecundity, and time to an event. The details of this and other tests that are intended for use with continuous responses are given in section 5.3. A disadvantage of the use of the Jonckheere-Terpstra trend test for analysing subgroup proportions where sample sizes are unequal is that it does not take sample size into account. It is not proper to treat a proportion based on 2 animals with the same weight as one based on 10, for example. For most toxicology experiments where survival is the endpoint, the sample sizes are equal, except for a rare lost subject, so this limitation is often of little importance. Where a sub lethal effect on surviving subjects is the endpoint, then this is a more serious concern.

189. The methods described in Table 5.2 are sometimes used but tend to be less powerful than one designed for quantal data, such as those so indicated in Table 5.2. They are appropriate only if responses of organisms tested are independent, and there is not significant heterogeneity of variances among groups (i.e., within-group variance does not vary significantly among groups). If there is a lack of independence or significant heterogeneity of variances, then modifications are needed. Some such modifications are

discussed below. In the ANOVA context, a robust ANOVA (e.g., Welch's variance-weighted one-way ANOVA) that does not assume variance homogeneity can be used.

190. Poisson tests can be used as alternatives in both non-trend and trend approaches. (See annex 5.1) A robust Poisson approach (Weller and Ryan (1998)) using dummy variables for groups, or multiple Mann-Whitney tests using subgroup proportions as the responses could be used. In each case, an adjustment for number of comparisons should be made. For the robust Poisson model, this would be of the Bonferroni-Holm type. For the Mann-Whitney test, the Bonferroni-Holm adjustment could be used or these pairwise comparisons could be "protected" by requiring a prior significant Kruskal-Wallis test (i.e. an overall rank-based test of whether any group differs from any other). It should be noted that the Mann-Whitney approach does not take subgroup size into account, but this will usually not be an issue for survival data.

5.2.2.4. Assumptions of methods for determining NOEC values

191. The assumptions that must be met for the listed methods for determining NOEC values vary according to the methods. Assumptions common to all methods are given below, while others apply only to specific methods. The details on the latter are given in annex 5.1.

192. Assumption: Responses are independent. All methods listed in Table 5.2.1 are based on the assumption that responses are independent observations. Failure to meet this assumption can lead to highly biased results. If organisms in a test respond independently, they can be treated as binomially distributed in the analysis.(See section 4.2.2 for further discussion.) It is not uncommon in toxicology experiments for treatment groups to be divided into subgroups. For example, an aquatic experiment may have subjects exposed to the same nominal concentration but grouped in several different tanks or beakers. It sometimes happens that the survival rate within these subgroups varies more from subgroup to subgroup than would be expected if the chance of dying were the same in all subgroups. This added variability is known as extra-binomial (or extra-Poisson) variation, and is an indication that organisms in the subgroups are responding to different levels of an uncontrolled experimental factor (e.g., subgroups are exposed to differing light levels or are being held at differing temperatures) and are not responding independently. In this situation, correlations among subjects must be taken into account. For quantal responses, an appropriate way to handle this is to analyse the subgroup responses; that is, the subgroups are considered to be the experimental unit (replicate) for statistical analysis. Note that lack of independence can arise from at least two sources: differences in conditions among the tanks and interactions among organisms.

193. With mortality data, extra-binomial variation (heterogeneity) is not a common problem, but it is still advisable to do a formal or visual check. Two formal tests are suggested: a simple Chi-Squared test and an improved test of Potthoff and Whittinghill (1966). Both tests are applied to the subgroups of each treatment group, in separate tests for each treatment group. While these authors do not suggest one, an adjustment for the number of such tests (e.g., Bonferroni) is advisable. It should be noted also that the Chi-squared test can become undependable when the number of expected mortalities in a Chi -squared cell is less than five. In this event, an exact permutation version of the Chi-squared test is advised and is available in commercially available software, such as StatXact and SAS.

194. If organisms are not divided into subgroups, lack of independence cannot be detected easily, and the burden for establishing independence falls to biological argument. If there is a high likelihood of aggression or competition between organisms during the test, responses may not be independent, and this possibility should be considered before assigning all organisms in a test level to a single test chamber.

195. It should be noted that even if subgroup information is entered separately, a simple application of the Cochran-Armitage test ignores the between-subgroup (i.e., within-group) variation and treats the data as though there were no subgrouping. This is inappropriate if heterogeneity among subgroups is

significant. The same is true of simple Poisson modelling. Thus, if significant heterogeneity is found, an alternative analysis is advised. One in particular deserves mention. This is a modification of the Cochran-Armitage test developed by Rao and Scott (1992) that is simple to use and is appropriate when there is extra-binomial variation. The beta-binomial model of Williams (1975) is another modification of the Cochran-Armitage tests that allows for extra-binomial variation. If the Jonckheere-Terpstra test is used, there is no adjustment (or any need to adjust) for extra-binomial variation, as that method makes direct use of the between-subgroup variation in observed proportions. However, as pointed out above, if there is considerable variation in subgroup sizes, this approach suffers by ignoring sample size.

Treatment of multiple controls

196. A preliminary test can be done comparing just the two controls as a step in deciding how to interpret the experimental data. For quantal (e.g., mortality) data, Fisher's exact test is appropriate. The decision of how to proceed after this comparison of controls is given in section 4.2.3.

5.2.3. Additional Information

197. Annex 5.1 contains details of the principle methods discussed in this section, including examples. Annex 5.2 contains a discussion of the power characteristics of the step-down Cochran-Armitage and Fisher exact tests. Section 5.3 and Annex 5.3 contain a discussion of the methods for continuous responses that can be used to analyse subgroup proportions, as discussed above.

5.2.4. Statistical Items to be Included in the Study Report

198. The report describing quantal study results and the outcome of the NOEC determination should contain the following items:

- Test endpoint assessed
- Number of Test Groups
- Number of subgroups within each group (if applicable)
- Identification of the experimental unit
- Nominal and measured concentrations (if available) for each test group
- Number exposed in each treatment group (or subgroup if appropriate)
- Number affected in each treatment group (or subgroup if appropriate)
- Proportion affected in each treatment group (or subgroup if appropriate)
- Confidence interval for the percent effect at the NOEC, provided that the basis for the calculation is consistent with the distribution of observed responses. (See Annex 5.3).
- P value for test of homogeneity if performed
- Name of the statistical method used to determine the NOEC
- The dose metric used
- The NOEC
- P value at the LOEC (if applicable)
- Design power of the test to detect an effect of biological importance (and what that effect is) based on historical control background and variability.

- Actual power achieved in the study.
- Plot of response data versus concentration.

5.3. Continuous data (e.g., Weight, Length, Growth Rate)

5.3.1. Hypothesis testing with continuous data to determine NOEC

199. Figure 5.2 provides a scheme for determining NOEC values for continuous data, and identifies several statistical methods that are described in detail below. As reflected in this flow chart, continuous monotone dose-response data are best analysed using a step-down test based on the Jonckheere trend test or Williams test (the former applicable regardless of the distribution of the data, the latter applicable only if data are normally distributed and variances of the treatment groups are homogeneous).

200. Non-monotonic dose-response data should be assessed using an appropriate pairwise comparison procedure. Several such are described below. They can be categorized according whether the data are normally distributed or homogeneous. Dunnett's test is appropriate if the data are normally distributed with homogeneous variance. For normally distributed but heterogeneous data, the Tamhane-Dunnett (T3) method (Hochberg and Tamhane, 1987) can be used. Alternatively, such data can be analysed by the Dunn, Mann-Whitney, or unequal variance t-tests with Bonferroni-Holm adjustment. Non-normal data can be analysed by using Dunn or Mann-Whitney tests with Bonferroni-Holm adjustment. Normality can be formally assessed using the Shapiro-Wilk test (Shapiro and Wilk 1965) while homogeneity of variance is assessed by Levene's test (Box, 1953). Dunn's test, if used, should be configured only to compare groups to control. All of these procedures are discussed in detail below. Alternatives exist to these if software used does not include these more desirable tests. For normality, the Anderson-Darling, Kolmogorov-Smirnov, Cramér-von Mises, Martinez-Iglewicz and D'Agostino Omnibus test are available. For variance homogeneity, Cochran's Q, Bartlett's and the Maximum F test can be used. The tests described in detailed in this chapter are recommended where available, based on desirable statistical properties.

201. There are, of course, a number of statistical procedures that are not listed in Figure 5.2 that might also be applied to continuous data. The following discussion identifies many of the procedures that might be used, and attempts to provide some insight into the strengths and weaknesses of each..

202. Table 5.3.1 lists methods that are sometimes used to determine NOEC values. Some of these methods are applicable only under certain circumstances, and some methods are preferred over the others. Parametric tests listed are performed only when the distribution of the data to be analysed is approximately normally distributed. Some parametric methods also require that the variances of the treatment groups be approximately equal.

	Parametric	**Non-Parametric**
Single-Step (Pair-wise)	Dunnett Tamhane-Dunnett	Dunn Mann-Whitney with Bonferroni correction
Step-down (Trend based)	Williams Bartholomew Welch trend Brown-Forsythe trend Sequences of linear contrasts	Jonckheere-Terpstra Shirley

Table 5.3.1. Methods used for determining NOEC values with continuous data.

All listed single step methods are based on pair-wise comparisons, and all step-down methods are based on trend-tests.

5.3.1.1. Parametric versus non-parametric tests

203. The parametric tests listed in Table 5.3.1, all require that the data be approximately normally distributed. Many also require that the variances of the treatment groups are equal (exceptions are the Tamhane-Dunnett, Welch and Brown-Forsythe tests). Parametric tests are desirable when these assumptions can be met. The failure of the data to meet assumptions can sometimes be corrected by transforming the data. (Section 5.1.10) Some non-parametric tests are almost as powerful as their parametric counterparts when the assumptions of normality and homogeneity of variances are met. The non-parametric tests may be much more powerful if the assumptions are not met. Furthermore, a test based on trend is generally more powerful than a pairwise test. A decision to use a parametric or non-parametric test should be based on which best describes the physical, biological and statistical properties of a given experiment.

204. Piegorsch and Bailer (1997), referenced in the document, warns that use of the Jonckheere-Terpstra test requires that shapes of distributions or the response variable be equivalent and in many cases, this translates to requiring that the response variable have a common variance. They conclude the applicability of the Jonckheere-Terpstra test is brought into question when there are large disparities in variances. While the Jonckheere-Terpstra test discussed in detail below is a distribution-free trend test, that fact alone does not mean that its results are not susceptible to heterogeneity of variance. While most people who have investigated the usual nonparametric methods find them less sensitive to these problems than the usual parametric procedures, they are not impervious to these problems. To address this question, a large power simulation study has been carried out (J. W. Green, manuscript in preparation) comparing the effects of variance heterogeneity on the Jonckheere, Dunnett, and Tamhane-Dunnett tests. These simulations have shown the Jonckheere test to be much less affected by heterogeneity than the alternatives indicated and to lose little of its good power properties.

205. Heterogeneity and non-normality are inherent in some endpoints, such as first or last day of hatch or swim up. There will be observed zero within-group variance in the control and lower concentrations quite often and non-zero variance in higher concentrations. No transformation will make the data normal or

homogeneous. It may be possible to apply some generalized linear model with a discrete distribution to such data, but that is not addressed in this chapter.

5.3.1.2. Single-step (pairwise) procedures

206. These tests are used when there is convincing evidence (statistical or biological) that the dose-response is not monotone. This evidence can be through formal tests or through visual inspection of the data, as discussed in section 5.3.2.3. Pairwise procedures are also appropriate when there are differences among the treatments other than dose, such as different chemicals or formulations. These tests are described briefly here. Details of each test, including mathematical description, power, assumptions, advantages and disadvantages, relevant confidence intervals, and examples are discussed in Annex 5.3.

207. *Dunnett's test:* Dunnett's test is based on simple t-tests from ANOVA but uses a different critical value that controls the family-wise error (FWE) rate for the $k-1$ comparisons of interest at exactly α. Each treatment mean is compared to the control mean. This test is appropriate for responses that are normally distributed with homogeneous variances and is widely available.

208. *Tamhane-Dunnett Test:* Also known as the T3 test, this is similar in intent to Dunnett's test but uses a different critical value and the test statistic for each comparison uses only the variance estimates from those groups. It is appropriate when the within-group variances are heterogeneous. It still requires within-group responses to be normally distributed and controls the FWE rate at exactly α.

209. *Dunn's Test:* This non-parametric test is based on contrasts of mean ranks. In toxicity testing, it is used to compare the mean rank of each treatment group to the control. To control the FWE rate at α or less, the Bonferroni-Holm correction (or comparable alternative) should be applied. Dunn's test is appropriate when the populations have identical continuous distributions, except possibly for a location parameter (e.g., the group medians differ), and observations within samples are independent. It is used primarily for non-normally distributed responses.

210. *Mann-Whitney test:* This is also a non-parametric test and can be applied under the same circumstances as Dunn's test. The Mann-Whitney rank sum test compares the ranks of measurements in two independent random samples and has the aim of detecting if the distribution of values from one group is shifted with respect to the distribution of values from the other. It can be used to compare each treatment group to the control. When more than one comparison to the control is made, a Bonferroni-Holm adjustment is used.

5.3.1.3. Step-down trend procedures

211. For continuous data, two trend tests are described for use in step down procedures, namely the Jonckheere-Terpstra and Williams' Test (described below) that are appropriate provided there is a monotone dose-response. Where expert judgement is available, the assessment of monotonicity can be through visual inspection. For such an assessment, plots of treatment means, subgroup means, and raw responses versus concentration will be helpful. An inspection of treatment means alone may miss the influence of outliers. However, a visual procedure cannot be automated, and some automation may be necessary in a high-volume toxicology facility. Although not discussed here in detail, the same methodology can be applied to the Welsch, Brown-Forsythe or Bartholomew trend tests.

212. A general step-down procedure is described in the next section. Where the term "trend test" is used, one may substitute either "Jonckheere-Terpstra test" or "Williams' test." Details of these, as well as advantages and disadvantages, examples, power properties, and related confidence intervals for each are given in Annex 5.3.

5.3.1.4. Determining the NOEC using a step-down procedure based on a trend test

213. This section describes a generalised step-down procedure for determining the NOEC for a continuous response from a dose response study. It is appropriate whenever the treatment means are expected to follow a monotone dose-response and there is no problem evident in the data that precludes monotonicity.

214. *Preliminaries:* The procedure described is suitable if the experiment being analysed is a dose response study with at least two dose groups (Fig. 62). For clarity, the term "dose group" includes the zero-dose control. Before entering the step-down procedure, two preliminary actions must be taken. First, the data are assessed for monotonicity (as discussed in section 5.1.4). A step-down procedure based on trend tests is used if a monotonic response is evident. Pairwise comparisons (e.g., Dunnett's, Tamhane-Dunnett, Dunn's test or Mann-Whitney with Bonferroni-Holm correction, as appropriate) instead of a trend-based test should be used where there is strong evidence of departure from monotonicity. Next, examine the number of responses and number of ties (as discussed in section 5.3.2.1). Small samples and data sets with massive ties should be analysed using exact statistical methods if possible. Finally, if a parametric procedure (e.g. Dunnett's or Williams' test) is to be used, then an assessment of normality and variance homogeneity should be made. These are described elsewhere.

215. *The Step-Down Procedure: The preferred approach to analysing monotonic response patterns is as follows.* Perform a test for trend (Williams or Jonckheere) on responses from all dose groups including the control. If the trend test is significant at the 0.05 level, omit the high dose group, and re-compute the trend statistic with the remaining dose groups. Continue this procedure until the trend test is first non-significant at the 0.05 level, then stop. The NOEC is the highest dose remaining at this stage. If this test is significant when only the lowest dose and control remain, then a NOEC cannot be established from the data.

216. *Williams' test:* Williams' test is a parametric procedure that is applied in the same way the Jonckheere-Terpstra test is applied. This procedure, described in detail in Annex 5.3, assumes data within concentrations are normally distributed and homogeneous. In addition to the requirement of monotonicity rather than linearity in the dose-response, an appealing feature of this procedure is that maximum likelihood methods are used to estimate the means (as well as the variance) based on the assumed monotone dose-response of the population means. The resulting estimates are monotone. An advantage of this method is that it can also be adapted to handle both between- and within-subgroup variances. This is important when there is greater variability between subgroups than chance alone would indicate. Williams' test must be supplemented by a non-parametric procedure to cover non-normal or heterogeneous cases. Either Shirley's (1979) non-parametric version of Williams' test or the Jonckheere-Terpstra test can be used, but if these alternative tests are used, one loses the ability to incorporate multiple sources of variances. Limited power comparisons suggest similar power characteristics for Williams' and the Jonckheere-Terpstra tests.

217. *Jonckheere-Terpstra Test:* The Jonckheere-Terpstra trend test is intended for use when the underlying response of each experimental unit is continuous and the measurement scale is at least ordinal. The Jonckheere-Terpstra test statistic is based on joint rankings (also known as Mann-Whitney counts) of observations from the experimental treatment groups. These Mann-Whitney counts are a numerical expression of the differences between the distributions of observations in the groups in terms of ranks. The Mann-Whitney counts are used to calculate a test statistic that is used in conjunction with standard statistical tables to determine the significance of a trend. Annex 5.3 gives details of computations. The Jonckheere-Terpstra test reduces to the Mann-Whitney test when only one group is being compared to the control.

218. The Jonckheere-Terpstra test has many appealing properties. Among them is the requirement of monotonicity rather than linearity in the dose-response. Another advantage is that an exact permutation version of this test is available to meet special needs (as discussed below) in standard statistical analysis packages, including SAS and StatXact. If subgroup means or medians are to be analysed, the Jonckheere-Terpstra test has the disadvantage of failing to take the number of individuals in each subgroup into account.

219. Extensive power simulations of the step-down application of the Jonckheere-Terpstra test compared to Dunnett's test have demonstrated in almost every case considered where there is a monotone dose-response, that the Jonckheere-Terpstra test is more powerful than Dunnett's test (Green, J. W., in preparation for publication). The only situation investigated in which Dunnett's test is *sometimes* slightly more powerful than the Jonckheere-Terpstra is when the dose-response is everywhere flat except for a single shift. These simulations followed the step-down process to the NOEC determination by the rules given above and covered a range of dose-response shapes, thresholds, number of groups, within-group distributions, and sample sizes.

5.3.1.5. Assumptions for methods for determining NOEC values

Small Samples / Massive Ties

220. Many standard statistical tests are based on large sample or asymptotic theory. If a design calls for fewer than 5 experimental units per concentration, such large sample statistical methods may not be appropriate. In addition, if the measurement is sufficiently crude, then a large proportion of the measured responses have the same value, or are very restricted in the range of values, so that tests based on a presumed continuous distribution may not be accurate. In these situations, an exact permutation-based methodology may be appropriate. While universally appropriate criteria are difficult to formulate, a simple rule that should flag most cases of concern is to use exact methods when any of the following conditions exists: (1) at least 30% of the responses have the same value; (2) at least 50% of the responses have one of two values; (3) at least 65% of the responses have one of three values. StatXact and SAS are readily available software packages that provide exact versions of many useful tests, such as the Jonckheere-Terpstra and Mann-Whitney tests.

Normality

221. When parametric tests are being considered for use, then a Shapiro-Wilk test (Shapiro and Wilk 1965) of normality should be performed. If the data are not normally distributed, then either a normalising transformation (section 5.1.10) should be sought or a non-parametric analysis should be done. Assessment of non-normality can be done at the 0.05 significance level, though a 0.01 level might be justified on the grounds that ANOVA is robust against mild non-normality. The data to be checked for normality are the residuals after differences in group means are removed; for example, from an ANOVA with concentration, and, where necessary, subgroup, as class (i.e., non-numeric) variables.

Variance Homogeneity

222. If parametric tests are being considered for use and the data are normally distributed, then a check of variance homogeneity should be performed. Levene's test (Box, 1953) is reasonably robust against marginal violations of normality. If there are multiple subgroups within concentrations, the variances used in Levene's test are based on the subgroup means. If there are no subgroups the variances based on individual measurements within each treatment group would be used. It should be noted that ANOVA is robust to moderate violations of assumptions, especially if the experimental design is balanced (equal n in the treatment groups), and that some tests for homogeneity are less robust than the ANOVA itself. Small

departures from homogeneity (even though they may be statistically significant by some test) can be tolerated without adversely affecting the power characteristics of ANOVA based tests. For example, it is well known that Bartlett's test is very sensitive to non-normality. It is customary to use a much smaller significance level, (e.g., 0.001) if this test is used. Levene's test, on the other hand, is designed to test for the very departures from homogeneity that cause problems with ANOVA, so that a higher level significance (0.01 or 0.05) in conjunction with this test can be justified. Where software is available to carry out Levene's test, it is recommended over Bartlett's.

223. For pairwise (single-step) procedures, if the data are normally distributed but heterogeneous, then a robust version of Dunnett's test (called Tamhane-Dunnett in this document) is available. Such a procedure is discussed in Hochberg and Tamhane (1987). Alternatives include the robust pairwise tests of Welch and Brown-Forsythe. If the data are normally distributed and homogeneous, then Dunnett's test is used. Specific assumptions and characteristics of many of the tests referenced in this section are given in Annex 5.3.

224. Of course, expert judgement should be used in assessing whether a significant formal test for normality or variance homogeneity reveals a problem that calls for alternative procedures to be used.

5.3.1.6. Operational considerations for statistical analyses

Treatment of Experimental Units

225. A decision that must often be made is whether the individual animals or plants can be used as the experimental unit for analysis, or whether subgroups should be the experimental unit. The consequences of this choice should be carefully considered. If there are subgroups in each concentration, such as multiple tanks or beakers or pots, each with multiple specimens, then the possibility exists of within- and among-subgroup variation, neither of which should be ignored. If subjects within subgroups are correlated, that does not mean that individual subject responses should not be analysed. It does mean that these correlations should be explicitly modelled or else analysis should be based on subgroup means. Methods for modelling replicated dose groups (e.g., nested ANOVA) are available. For example, Hocking (1985), Searle (1987, especially section 13.5), Milliken and Johnson (1984, esp. chapter 23), John (1971), Littell (2002) and many additional references contain treatments of this.

226. Technical note: If both within-subgroup and between-subgroup variation exist and neither is negligible, then the step-down trend test should either be the Jonckheere-Terpstra test with mean or median subgroup response as the observation, or else an alternative trend test such as Williams' or Brown-Forsythe with the variance used being the correct combination of the within- and among-subgroups variances as described in the discussion on the Tamhane-Dunnett test in Appendix 5.3.1.

227. Given the possibility of varying subgroup sample sizes at the time of measurement, it may not be appropriate to treat all subgroup means or medians equally. For parametric comparisons, this requires only the use of the correct combination of variance components, again as described as Appendix 5.3.1. For non-parametric methods, including Jonckheere's test, there are no readily available methods for combining the two sources of variability. The choices are between ignoring the differences in sample sizes and ignoring the subgroupings. If the differences in sample sizes are relatively small, they can be ignored. If the differences among subgroups are relatively small, they can be ignored. If both differences are relatively large, then there is no universally best method. A choice can be made based on what has been observed historically in a given lab or for a given type of response and built into the decision tree.

Identification and Meaning of Outliers

228. The data should be checked for outliers that might have undue influence on the outcome of statistical analyses. There are numerous outlier rules that can be used. Generally, an outlier rule such as Tukey's (Tukey, 1977) that is not itself sensitive to the effects of outliers is preferable to methods based on standard deviations, which are quite sensitive to the effects of outliers. Tukey's outlier rule can be used as a formal test with outliers being assessed from residuals (results of subtracting treatment means from individual values) to avoid confounding outliers and treatment effects.

229. Any response more than 1.5 times the interquartile range above the third quartile (75th percentile) or below the first quartile (25th percentile) is considered an outlier by Tukey's rule. Such outliers should be reported with the results of the analysis. The entire analysis of a given endpoint can be repeated with outliers omitted to determine whether the outliers affected the conclusion. While it is true that nonparametric analyses are less sensitive to outliers than parametric analyses, omission of outliers can still change conclusions, especially when sample sizes are small or outliers are numerous.

230. Conclusions that can be attributed to the effect of outliers should be carefully assessed. If the conclusions are different in the two analyses, a final analysis using non-parametric methods may be appropriate, as they are less influenced than parametric methods by distributional or outlier issues.

231. It is not appropriate to omit outliers in the final analysis unless this can be justified on biological grounds. The mere observation that a particular value is an outlier on statistical grounds does not mean it is an erroneous data point.

Multiple Controls

232. To avoid complex decision rules for comparing a water and solvent control, it is recommended that a non-parametric Mann-Whitney (or, equivalently, Wilcoxon) comparison of the two controls be performed, using only the control data. This comparison can be either a standard or an exact test, according as the preliminary test for exact methods is negative or positive. If a procedure for comparing controls using parametric tests were to be employed, then another layer of complexity can result, where one has to assess normality and variance homogeneity twice (once for controls and again later, for all groups) and one must also consider the possibility of using transformations in both assessments.

General

233. Outliers, normality, variance homogeneity and checks of monotonicity should be done only on the full data set, not repeated at each stage of the step-down trend test, if used. Diagnostic tools for determining influential observations can also be very helpful in evaluating the sensitivity of an analysis to the effects of a few unusual observations.

5.3.2. Statistical Items to be Included in the Study Report.

234. The report describing continuous study results and the outcome of the NOEC determination should contain the following items:

- Description of the statistical methods used
- Test endpoint assessed
- Number of Test Groups
- Number of subgroups within each group and how handled (if applicable)

- Identification of the experimental unit
- Nominal and measured concentrations (if available) for each test group
- The dose metric used.
- Number exposed in each treatment group (or subgroup if appropriate)
- Group means (and median, if a non-parametric test was used) and standard deviations
- Confidence interval for the percent effect at the NOEC, provided that the basis for the calculation is consistent with the distribution of observed responses. (See Annex 5.3).
- The NOEC
- P value at the LOEC (if applicable)
- Results of power analysis
- Plot of response versus concentration

6. DOSE-RESPONSE MODELLING

6.1. Introduction

235. The main regulatory use of dose-response modeling in toxicity studies is to estimate an *ECx*, the exposure concentration that causes an x% effect in the biological response variable of interest, and its associated confidence bounds. The value of *x*, the percent effect, may be specified in advance, based on biological (or regulatory) considerations. Guidelines may specify for which value(s) of *x* the *ECx* is required. This chapter discusses how an *ECx* may be estimated, as well as how it may be judged that the available data are sufficient to do so.

236. Dose-response (or concentration-response) modelling aims at describing the dose-response data as a whole, by means of a dose-response model. In general terms, it is assumed that the response, *y*, can be described as a function of concentration (or dose), *x* :

$$y = f(x)$$

where *f* can be any function that is potentially suitable for describing a particular dataset. Since *y* is considered as a function of *x,* the response variable *y* is also called the dependent variable, and the concentration *x,* the independent variable. As an example, consider the linear function

$$y = a + b\,x$$

where the response changes linearly with the concentration. Here, *a* and *b* are called the model parameters. By changing parameter a one may shift the line upwards or downwards, while by changing the parameter b one may rotate the line. Fitting a line to a dataset is the process of finding those values of a and b that result in “the best fit”, i.e., making the distances of the data points to the line as small as possible. Similarly, for any other dose-response model, or function *f*, the best fit may be achieved by adjusting the model parameters.

EXHIBIT 49

UNITED STATES ENVIRONMENTAL PROTECTION AGENCY
WASHINGTON D.C., 20460

OFFICE OF CHEMICAL SAFETY AND POLLUTION PREVENTION

PC Code: 121027
DP Barcode: 427543
Date: September 16, 2015

MEMORANDUM

SUBJECT: Registration Review: Preliminary Environmental Fate and Ecological Risk Assessment Endangered Species Effects Determination for Methoxyfenozide

TO: Bonnie Adler, Chemical Review Manager
Jill Bloom, Team Leader
Linda Arrington, Branch Chief
Risk Management and Implementation Branch V
Pesticide Re-evaluation Division (7508P)

FROM: Mary Clock-Rust, Biologist
Karen Milians, Ph.D., Chemist
Environmental Risk Branch IV
Environmental Fate and Effects Division (7507P)

REVIEWED BY: Thomas Steeger, Ph.D., Senior Science Advisor
Jim Carleton, Ph.D., Senior Scientist
Environmental Risk Branch IV
Environmental Fate and Effects Division (7507P)

APPROVED BY: Jean Holmes, DVM, MPH, Branch Chief
Environmental Risk Branch IV
Environmental Fate and Effects Division (7507P)

The Environmental Fate and Effects Division (EFED) has completed a preliminary risk assessment for the insecticide methoxyfenozide. EFED's analysis has determined that the use of methoxyfenozide has the potential for direct effects on Federally listed threatened/endangered (hereafter referred to as "listed") and non-listed freshwater invertebrates following acute exposure, and on listed and non-listed freshwater and estuarine/marine invertebrates following chronic exposure. Acute risk to listed estuarine/marine invertebrates is also possible for the majority of methoxyfenozide uses evaluated. The likelihood of direct adverse effects on birds, terrestrial-phase amphibians, reptiles, mammals, fish, aquatic-phase amphibians, and terrestrial and aquatic plants

from exposure to methoxyfenozide as a result of the registered uses is expected to be low. However, the extent to which other taxa that depend on aquatic invertebrate species may be indirectly affected is uncertain. Finally, data are incomplete but available lines of evidence suggest that methoxyfenozide risk to terrestrial and aquatic plants is likely to be low.

The potential for direct adverse effects to adult honey bees (*Apis mellifera*) is considered low. A review of submitted field studies on honey bee brood development and colony survival (including overwintering) does not indicate that honey bee brood (larvae/pupae) are adversely affected by exposure to the compound, although uncertainties were noted in the submitted toxicity data. A recently submitted laboratory-based acute toxicity study on larval honey bees raises new concerns. Using the new toxicity data combined with default exposure and larval food consumption rates from the *Guidance for Assessing Pesticide Risks to Bees* (US EPA, 2014) results in risk estimates that exceed EFED's levels of concern (LOC) for honey bee larvae.

Uncertainties

Although methoxyfenozide is intended to act specifically on immature stages of insects within the order Lepidoptera (moths/butterflies), there is uncertainty about the extent to which larval stages of other insects (excluding honey bees) may be affected, since the compound acts as an ecdysone agonist and is intended to induce premature molts thereby resulting in death of the target organism. There are also concerns for beneficial lepidopterans that co-occur in areas where methoxyfenozide is used.

No data are available to assess the potential for adverse effects on terrestrial plants or to aquatic vascular plants from exposure to methoxyfenozide; however, toxicity data available for aquatic non-vascular plants did not indicate any adverse effects from exposure up to the solubility limit of the compound (3.3 mg/L). Also, terrestrial and vascular aquatic plant data on tebufenozide, another ecdysone agonist in the same chemical class as methoxyfenozide, suggest that methoxyfenozide toxicity to terrestrial and aquatic plants is likely to be low. Further, no reports of plant damage resulting from exposure to methoxyfenozide have been recorded in EFED's incident databases. Given the mode of action of these compounds, it is uncertain whether any analogous pathways (*i.e.*, ecdysone receptors) exist in plants.

For uses where the retreatment interval (RTI) was not specified, a three-day interval was assumed. The RTI was not specified on two labels, EPA Reg, # 62719-442 (corn) and EPA Reg. # 62719-666 (peanuts).

Although whole colony studies are available for methoxyfenozide and did not demonstate any consistent long-term adverse effects on brood development, a laboratory-based chronic toxicity study with larval honey bees, in which exposure conditions can be more readily controlled, would increase the confidence in risk conclusions and help to address uncertainties regarding repeated direct exposure of larvae to methoxyfenozide. Specifically, a 21-day larval honey bee toxicity study extending through adult emergence would be informative.

UNITED STATES ENVIRONMENTAL PROTECTION AGENCY
WASHINGTON D.C., 20460

OFFICE OF CHEMICAL SAFETY AND POLLUTION PREVENTION

Environmental Fate and Ecological Risk Assessment for Registration Review of Methoxyfenozide.

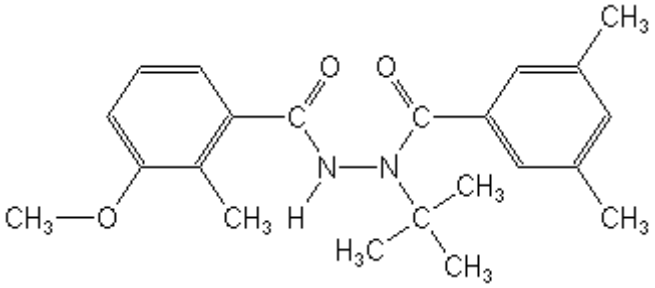

Methoxyfenozide

CAS Registry No: 161050-58-4 PC Code: 121027

Prepared by: Mary Clock-Rust, Biologist Karen Milians, Ph.D., Chemist	U.S. Environmental Protection Agency Office of Pesticide Programs Environmental Fate and Effects Division Environmental Risk Branch IV 1200 Pennsylvania Ave., NW Mail Code 7507P Washington, DC 20460
Reviewed by: Jean Holmes D.V.M, Branch Chief Thomas Steeger, Ph.D., Senior Science Advisor Jim Carleton, Ph.D., Senior Scientist	

September 16, 2015

Executive Summary

The preliminary risk assessment (PRA) in support of Registration Review for methoxyfenozide, examines the risks to wildlife associated with the compound's labeled uses. The risk assessment is based on the best available scientific and commercial information on the use, environmental fate and transport, and ecological effects of methoxyfenozide on non-target organisms.

Methoxyfenozide is a dibenzoyl hydrazine insecticide which acts as an insect growth regulator (IGR) and registered for use on a variety of agricultural as well as non-agricultural sites across the US. The chemical is an agonist for the invertebrate molting hormone, ecdysone, and induces a precocious incomplete molt in invertebrates, particularly lepidopterans (butterflies/moths).

Methoxyfenozide may be applied using ground, aerial, conventional spray or chemigation application methods. Single application rates range from 0.16 lb a.i./A (for cotton and peanuts) to a maximum of 0.40 lb a.i./A (for cotton). Use sites include citrus, cotton, fruiting vegetables (Crop Group 1B), globe artichokes, bushberries (Crop Group 13-07B), corn, peanuts, grapes, stone fruits (Crop Group 12-12) and tree nuts (Crop Group 14-12; including almonds, walnuts, and other nuts). Annual maximum application rates across all methoxyfenozide use sites do not exceed 1.0 lb a.i./acre/year. The technical registrant for this pesticide is Dow AgroSciences (DAS).

The compound is considered very persistent and moderately mobile based on a soil aerobic metabolism half-lives range from 336 to 1100 days; organic carbon partition coefficient (K_{oc}) range from 219 to 922 mL/g_{oc}; and, a log octanol-water partition coefficient (K_{ow}) of 3.72. Once applied, methoxyfenozide has the potential to move off the site of application by leaching, erosion and runoff where it can accumulate in aquatic systems.

While methoxyfenozide is expected to persist in the environment and move to surface water via runoff and erosion based on laboratory studies, a monitoring study was recently completed which showed no apparent accumulation of methoxyfenozide in sediment and water at any of the monitoring sites under the conditions tested. Furthermore, bioconcentration data with both fish and invertebrates indicate that the compound does not bioconcentrate appreciably (BCF range: 1.1 – 22.1X) and it depurates relatively quickly once organisms are no longer exposed. Available data indicate that for both freshwater and estuarine/marine fish, the toxicity of methoxyfenozide appears limited by its solubility in water (3.3 mg a.i./L) and at this concentration, no adverse effects (*i.e.*, mortality or sublethal effects) were observed on fish following acute exposure.

EFED's analysis has determined that all of the registered uses of methoxyfenozide have the potential to result in direct adverse effects to freshwater and estuarine/marine invertebrates. Specifically, federally listed threatened/endangered (hereafter referred to as "listed") and non-listed freshwater invertebrates are at risk following acute exposure to methoxyfenozide, and listed and non-listed aquatic freshwater and estuarine/marine invertebrates following chronic exposure. Acute risk to listed estuarine/marine invertebrates is also possible for the majority of registered methoxyfenozide use sites that are in close proximity to these environments. A low likelihood of direct adverse effects to birds, terrestrial-phase amphibians, reptiles, mammals, fish, aquatic-phase amphibians, and terrestrial and aquatic plants is expected from exposure to methoxyfenozide as a

result of the registered uses. However, there is the potential for indirect effects on taxa that depend on aquatic invertebrate species for prey and/or habitat, although the magnitude and likelihood of indirect effects are uncertain.

There are data to indicate that lepidopteran species of terrestrial invertebrates are sensitive to methoxyfenozide, consistent methoxyfenozide's use in controlling lepidopteran pests (such as the corn root worm, cabbage moth, diamond back moth). While available acute toxicity data do not indicate potential risk to adult honey bees, a laboratory-based study indicates that larval honey bees may be sensitive to methoxyfenozide following a single (acute) exposure. Screening-level risk quotient (RQ) values exceed the acute risk level of concern (LOC) for honey bee larvae, although refined RQ values based on measured residue levels in pollen/nectar are below the acute risk LOC. Field-based studies of whole colonies fed methoxyfenozide-spiked diets did not exhibit any consistent, long-term adverse effect on brood development and/or colony overwintering capacity. Laboratory-based chronic toxicity data for larval honey bees would increase the confidence in risk conclusions and address uncertainties about methoxyfenozide risk to terrestrial invertebrates and lead to more robust risk conclusions. Specifically, a 21-day larval bee toxicity study extending through adult emergence would help to address uncertainties.

1.0 Problem Formulation

The problem formulation sets the objectives for the risk assessment and provides a plan for analyzing the data and characterizing the risk (USEPA 1998a). EFED completed the preliminary problem formulation for the environmental fate, ecological risk, endangered species, and drinking water exposure assessments to be conducted as part of the Registration Review of methoxyfenozide (USEPA, 2013b).

The following section summarizes the key points of that document and discusses any differences between the analysis outlined in the preliminary problem formulation and the analysis conducted in this risk assessment.

1.1 Nature of Regulatory Action

The risk assessment is conducted as part of the Agency's Registration Review process for pesticide active ingredients. The Registration Review process was established under the Food Quality Protection Act (FQPA 1996).

2. Nature of Chemical Stressor

Methoxyfenozide, 3-methoxy-2-methylbenzoic acid 2-(3,5-dimethylbenzoyl)-2-(1,1-dimethylethyl)hydrazide (CAS No. 161050-58-4), belongs to the diacylhydrazine class of insecticides that interfere with the binding of the endogenous steroidal molting hormone 20-hydroxyecdysone with its nuclear receptor protein complex. As such, methoxyfenozide is referred to as an ecdysteroid (ecdysone) agonist[1]. Exposure of sensitive organisms (pests including fruit worm, diamond back moth, corn root worm, leaf roller, armyworm, grapevine moth and other

[1] Shimizu *et al*., 1997.

USE SCENARIO (PRZM scenario used; rate modeled in kg/ha)		Estimated Environmental Concentrations (EECs, ppb)				
		Application Method	Peak	96-hour	21-day	60-day
Globe Artichoke	CA lettuce, 0.28 x 4 applic @ 7-d interval	aerial	144	144	143	142
Grass, forage fodder hay	OR Grass seed x 8 applic @ 3-d interval	aerial	37.4	37.3	37.1	36.7
	FL turf, 0.07 x 8 applic @ 3-d interval	aerial	20.5	20.4	20.2	19.9
Bushberries	OR berries, 0.07 x 3 applic @ 7-d interval	aerial	13.2	13.1	13.0	12.9
	OR berries, 0.28 x 3 applic @ 7-d interval	aerial	52.7	52.6	52.2	51.6
Peanuts	NC peanuts, 0.09 x 3 applic @ 3-d interval	aerial	27.6	27.6	27.4	27.0
	NC peanuts, 0.18 x 3 applic @ 7-d interval	aerial	54.5	54.4	54.0	53.4
Corn	MS corn, 0.07 x 17 applic @ 3-d interval	aerial	144	144	143	141
	MS corn, 0.28 x 4 applic @ 3-d interval	aerial	130	130	127	127
Grapes[2]	NY grapes, 0.13 x 5 applic @ 3-d interval	aerial	63.9	63.8	63.5	63.1
	NY grapes, 0.26 x 5 applic @ 4-d interval	aerial	141	141	140	139
Tree nuts (almond, pistachio)	CA almond, 0.25 x 4 applic @ 3-d interval	aerial	66.0	65.8	65.3	64.3
	CA almond, 0.43 x 4 applic @ 10-d interval	aerial	101	101	100	99
	GA pecans, 0.13 x 8 applic @ 8-d interval	aerial	72.3	72.1	71.7	70.7

[1]Refer to the modeling results for NC cotton scenario in Appendix F
[2] Although methoxyfenozide is not registered for use on grapes in NY, this scenario was used for modeling purposes.
Bolded value represents the highest EDWC for methoxyfenozide

3.2.2.4 Aquatic Exposure Monitoring

Methoxyfenozide was not included in monitoring conducted by the U. S. Geological Survey (USGS) National Water Quality Assessment (NAWQA) program nor in the California Department of Pesticide Regulation (CDPR) Surface Water Database (CDPR 2003).

Because methoxyfenozide is very persistent, moderately mobile and may accumulate in the aquatic environment following repeated applications, the Agency recommended surface water and sediment studies using a representative sample of water bodies in high use areas (based on DAS record sales, growers and state and county government records). These studies were intended to determine whether multiple years of use would result in evidence of accumulation of methoxyfenozide residues in water and/or sediment in areas that represent vulnerable fields (prone to runoff). Samples for determining methoxyfenozide residues were collected over a two-year period (2012 and 2013) in two lotic (flowing) water bodies and five lentic (standing) water bodies in each of the following states: California, Mississippi, and Michigan.

The maximum concentration of methoxyfenozide detected in lotic surface water samples was 1.31 µg/L, found in Mississippi. The maximum concentration detected in lentic waters was 0.845 µg/L, in a pond in Michigan. The maximum concentration of methoxyfenozide in benthic sediments (31 µg/kg) was detected in Michigan. No apparent accumulation of methoxyfenozide was observed in sediment at any monitoring sites after years of use. There are deficiencies of the monitoring study such as analytical methods slightly modified (ECMs reported in the study differed from the one submitted to the Agency) and one sampling site was changed with an alternate sampling point.

It may not be appropriate to make a direct comparison from the results of the monitoring study with the values obtained in modeling (using SWCC) because the frequency of sampling in the monitoring study may not have captured the peak concentration. Additionally, SWCC model simulates the impact of daily weather on the treated agricultural field, and resulting concentrations in an adjacent farm pond over a defined period (here, thirty years). During this time, pesticide is washed-off of the field into the water-body by twenty to forty rainfall/runoff events per year. Each new addition of pesticide mass from each runoff event adds to the existing pesticide mass in the pond from previous runoff and/or spray-drift events. Since methoxyfenozide is known to be persistent in aquatic environments, the mass of the pesticide accumulates in the pond from one year to the next. In the SWCC model, the yearly simulated peaks are not independent of each other but are temporally auto-correlated, meaning that the "1-in-10 year EECs" obtained from model post-processing are in part functions of the simulation duration. As a result, SWCC results likely overestimate concentrations in streams and various other kinds of water bodies, as over the course of thirty years, some loss of methoxyfenozide is expected due to washout, dispersion, burial of sediment and other dissipative processes that aren't simulated. In particular, methoxyfenozide concentrations in lotic (flowing) water bodies are not expected to accumulate at such a high concentrations from year to year because of downstream advective removal. **Table 8** below details the results of the monitoring study conducted by DAS.

Table 8: Summary of the Methoxyfenozide Sediment and Surface Water Monitoring Study

Site	Concentration of methoxyfenozide in surface water (µg/L), (Number of samples analyzed)		Concentration of methoxyfenozide in sediment (µg/kg), (Number of samples analyzed)	
	Lotic	Lentic	Lotic	Lentic
California	ND-1.01 (88)[1]	ND-0.0502 (20)	ND (8)	ND (20)
Mississippi	ND-1.31 (55)[2]	ND-0.233 (20)	ND (8)	ND (20)

Michigan	ND (36)[3]	ND-0.845 (23)	ND (4)	ND-31.0 (23)

LOQ=0.050 µg/L and LOD= 0.015µg/L in surface water and LOD= 3 µg/kg in sediment.
ND =below detection limit
[1]87, 7- day composite samples and 1, 28-day composite sample
[2]47, 7- day composite samples and 8, 28-day composite samples
[3]22, 7- day composite samples and 14, 28-day composite samples

OPP is not aware of any other monitoring programs in which methoxyfenozide is an analyte.

3.2.3 Measures of Terrestrial Exposure

Exposure to terrestrial organisms was assessed based on the registered uses of methoxyfenozide. Dietary exposure to birds and mammals was assessed using the T-REX model[2]. Terrestrial plant exposure was estimated using the TerrPlant model[13].

3.2.3.1. Ingestion of Foliar Residues by Birds and Mammals

Terrestrial wildlife exposure estimates are typically calculated for the dietary exposure of birds and mammals. Avian exposures are considered surrogates for exposures to terrestrial-phase amphibians and reptiles. For exposure to terrestrial organisms, such as birds and mammals, pesticide residues on food items are estimated, based on the assumption that organisms are exposed to pesticide residues in a given exposure use pattern. For methoxyfenozide, application methods for the registered uses include aerial, broadcast, banded, and directed spray of liquid formulations for all crops.

T-REX[14] (Version 1.5.2) is used to calculate upper-bound dietary EECs for estimating exposure to birds and mammals resulting from the registered uses of methoxyfenozide. A one year time period is simulated, and the default foliar dissipation half-life of 35 days was used for modeling the registered uses. An example printout from the T-REX model is provided in **Appendix D**.

Table 9: Input Parameters for Deriving Terrestrial EECs for Methoxyfenozide Labeled Uses (T-REX).

Use Site	Application Rate (lbs a.i./A)	Minimum Reapplication Interval (days)[1]	Number of Applications
Citrus	0.25	14	4
Cotton[3]	0.4	10	4
Fruiting Vegetables	0.25	7	4
Globe Artichokes	0.25	7	4
Bushberries	0.25	7	3
Corn	0.25	NS[2]	4
Peanuts	0.16	7	3

[13] http://www.epa.gov/oppefed1/models/terrestrial/index.htm
[14] USEPA. 2014. T-REX Version 1.5.2 (Terrestrial Residue Exposure). http://www.epa.gov/oppefed1/models/terrestrial/#trex (last accessed 02.24/15)

EXHIBIT 50

Bernard A. Engel, Ph.D., P.E.
Department of Agricultural and Biological Engineering (ABE)
Purdue University, West Lafayette, IN 47907-2093
engelb@purdue.edu
Phone: 765-494-1162 FAX: 765-496-1115

Education

Ph.D. 1988, Purdue University, Department of Agricultural Engineering. Dissertation: *An artificial intelligence approach to soil erosion modeling.*

M.S. 1985, University of Illinois, Department of Agricultural Engineering. Thesis: *Crop coefficients for irrigation scheduling in Illinois.*

B.S. 1984, University of Illinois, Department of Agricultural Engineering.

Professional Positions

Founding Director, Purdue University Discovery Park Center for the Environment (July 2005-September 2006)

Head of ABE, Purdue University (May 2005-present)

Interim Head of ABE, Purdue University (August 2004-May 2005)

Professor, Purdue University (1996-present)

Research Engineer, Sabbatical Leave at NASA Kennedy Space Center (KSC), KSC, FL and US Army Construction Engineering Research Laboratory, Champaign, IL (1994-95)

Associate Professor, Purdue University (1992-1996)

Assistant Professor, Purdue University (1988-1992)

Awards and Honors

State Scholarship, Illinois, 1980-1984

Johnathan Baldwin Turner Scholarship, 1980-1984

School of Agriculture Fellowship, University of Illinois, 1984-1985

USDA National Needs Fellow, 1985-1988

ASAE Educational Aids Blue Ribbon Award, *Dam Site Selection Expert System*, 1987

ASEE NASA Summer Fellow, Kennedy Space Center, Florida, 1992-1993

Professional Engineer (PE) (Indiana), 1995-present

ESCOP/ACOP Leadership Fellow, 1996-1997

Engineering Best Teacher Award, Purdue University, 1996

School of Agriculture Outstanding Researcher, Purdue University, 1998

University Scholar, Purdue University, 1999-2003

ASAE Outstanding Young Researcher Award, 1999

Horwood Critique Honorable Mention Prize for 1999, 2001 and 2002 from the Urban and Regional Information Systems Association (URISA) for GIS and Hydrologic/Water Quality Modeling Papers

Outstanding Graduate Educator, College of Agriculture, 2006

Food Systems Leadership Institute Fellow, 2012

ASABE Fellow, 2014

Recognized among the 8 most productive authors globally in nonpoint source pollution modeling research (Li et al. 2014, JSWC 69(4), doi:10.2489/jswc.69.4.121A).

Gilley Academic Leadership Award, ASABE, 2016

Relevant Activities
US EPA Food Quality Protection Act (FQPA) Board Member and Federal Insecticide, Fungicide, and Rodenticide Act (FIFRA) SAP participant, 1999-present.

- 1999 - Use of Watershed-derived Percent Crop Areas as a Refinement Tool in FQPA Drinking Water Exposure Assessments for Tolerance Reassessment
- 2000 - Consultation on Development and Use of Distributions of Pesticide Concentrations in Drinking Water for FQPA Assessments
- 2004 - A Model Comparison: Dietary and Aggregate Exposure in Calendex, CARES, and Lifeline
- 2011 - Two-dimensional Exposure Rainfall-Runoff Assessment (TERRA) Watershed Model and its Use in the FIFRA Ecological Risk Assessment for Antimicrobial Uses of Copper
- 2012 - Problem Formulation for the Reassessment of Ecological Risks from the Use of Atrazine
- 2015 - Development of a Spatial Aquatic Model (SAM) for Pesticide Risk Assessment

EXCELLENCE IN RESEARCH

Statement of Research Contribution

Dr. Engel has attained national and international stature in the field of information systems, focusing on the use of geographic information systems (GIS), expert systems, artificial intelligence and simulation to study and control agricultural non-point source pollution of surface and ground water. Dr. Engel was among the first to seize the opportunity presented by affordable workstation computers capable of displaying high resolution images and powerful enough to quickly model large land areas. He realized that the integration of the two fields (information systems and hydrologic/water quality modeling) offered enormous potential, both in the laboratory and in the field to greatly improve the decision-making that affects our water resources. Previously, investigators were forced to spend a great deal of time, money and effort in preparing the input spatial data sets needed for a single run of a large model; consequently, these valuable models were largely unused. Dr. Engel has been a leader in the national effort to integrate GIS and information technologies with watershed modeling to produce very usable, very powerful tools that dramatically reduce preparation time from weeks and months to a matter of minutes. This has made these complex models practical for the first time in evaluating a research hypothesis, or a design decision. The work performed by Dr. Engel and his students has helped to shape an entirely new approach to water quality modeling, that of developing water quality models within the context of a GIS setting. This has enabled "basin-level" water quality modeling (such as with SWAT), which can help not only to prevent costly, ineffective regulations, but more importantly, target stringent protection toward the most vulnerable areas.

These discoveries are now used by many researchers around the world and have been extended by other scientists to create modeling and decision support systems which are being used to evaluate water resources and water quality issues for the entire US. His methodologies are widely used by other universities, by local, state and federal government agencies, including NASA's Kennedy Space Center, the US Army (Ft. Chaffee, Camp Shelby, Ft. Bragg, Ft. Campbell, Ft. Stewart, and Ft. Leonardwood), the USDA Natural Resources Conservation Service (NRCS), and the US EPA to improve and protect water resources. Within Indiana, his research results are routinely used to protect water resources by the NRCS, the Office of the

Indiana State Chemist (OISC), Indiana Department of Natural Resources (IDNR), and Indiana Department of Environmental Management (IDEM). His programs are in use around the world, including Jamaica, Portugal, the Netherlands, Germany, India, England, Australia and Indonesia. In addition, personnel trained by Dr. Engel in Jamaica and Portugal are continuing the development of more site specific systems.

Dr. Engel is an active project leader and key contributor to multi-disciplinary research within the Colleges of Agriculture and Engineering, and Purdue University. He and his co-investigators have leveraged Purdue's investment in this research, obtaining more than $26.6 million in external support during the past 28 years. His cross-disciplinary collaborations have been most significant with faculty from Agricultural Economics, Forestry and Natural Resources, Agronomy, Civil Engineering, Earth and Atmospheric Science, and Veterinary Medicine. Dr. Engel led the development of the geographic information systems (GIS) database for the interdisciplinary Indian Pine Natural Resources Field Station. Building on this success, he initiated an effort (Center for Advanced Applications of GIS - CAAGIS) to promote multi-disciplinary research, teaching and outreach using spatial (GIS) data.

Dr. Engel has created numerous environmental decision support systems and in the past 18 years has created web-based watershed and water quality decision support systems by integrating GIS and natural resources modeling tools (many of which were developed by Dr. Engel and his students). For example, the Long-Term Hydrologic Impact Assessment (L-THIA) model (www.ecosystemtools.org) is widely used throughout the US and has been adopted by the International City/County Management Association (ICMA). The L-THIA system with WWW GIS and watershed delineation capabilities is widely used with US EPA Region 5 and is being increasingly used in TMDL analysis. Recent extensions of the model have added representation of Low Impact Development and Best Management Practices and the optimal selection and placement of these practices. The National Agricultural Pesticide Risk Analysis (NAPRA) system (www.ecosystemtools.org) is used within Indiana and the Midwest to create pesticide and nutrient management plans for agricultural watersheds. A hydrograph separation tool called WHAT (Web-based Hydrograph Analysis Tool) automates access to USGS stream flow sites and performs baseflow separation on the data (http://engineering.purdue.edu/~what/). The Flow and Load Duration Curve tool (http://engineering.purdue.edu/~ldc) flow and water quality data from USGS gauging stations and from USEPA water quality databases to create flow duration curves and load duration curves that are useful in TMDL analyses and in creating watershed management plans. These and other web-based watershed and water quality decision support tools developed by Dr. Engel are used hundreds of times daily by a range of users in government and the private sector. More recently, he has provided co-leadership in the development of a sensitive crops and sites registry to protect them from pesticide spray drift (www.driftwatch.org).

Professor Engel's research has provided significant benefits to Indiana, the US, and internationally. One of the major sources of ground water pollution within Indiana, and within the Midwest US, is nonpoint source (NPS) pollution resulting from agricultural production. Dr. Engel's efforts in modeling the vulnerability of ground water to potential pollutants have created a series of ground water vulnerability maps that are being used within the State's ground water protection State Management Plan. He developed and validated a unique technique that used models integrated with GIS to determine ground water vulnerability to agricultural NPS

pollution. The results were evaluated using observed nitrate and pesticide contamination in well water data and were found to be far more accurate than previously accepted techniques. These maps estimated that approximately 25% of the State is highly susceptible to contaminants reaching ground water with over 75% of pesticide and elevated nitrate detections located within the portions of the State predicted to be most susceptible. As a result, the State's ground water monitoring effort was designed to place greater numbers of monitoring wells within the State's most susceptible areas and the numbers of wells in less vulnerable areas were reduced. This provided improved protection for the State's ground water and resulted in substantial savings to the State since the overall number of monitoring wells could be safely reduced. The ground water vulnerability maps are also being used within the State Management Plan to target ground water educational efforts to areas with the most sensitive ground water. As a result of this pioneering research, regulations banning the use of certain pesticides within the State were not necessary. It also permitted the continued use of agronomic practices that maintain high levels of agricultural productivity in the less sensitive areas.

Dr. Engel recently developed a decision support tool to estimate the risk of pesticides and nutrients reaching ground and surface water at any location within Indiana, using site specific agronomic management information and extensive databases including GIS datasets. The tool is also unique in that it is WWW accessible allowing users to explore the effects of alternative management practices on the movement of pesticides to ground and surface water. It is currently being used to target water protection efforts within the state.

Dr. Engel has extensive experience with the development and application of watershed hydrologic models including SWAT to address a range of water quality issues at watershed scales. He has extensive experience in modeling pesticide, nutrient, and erosion losses from watersheds.

Publications

a. Refereed Journal Papers

1. Engel, B.A., W.D. Lembke, S.K. Sipp, and W.D. Goetsch. 1989. Irrigation crop coefficients for Illinois corn. Trans. ASAE. 32(4):1275-1280.
2. Engel, B.A., D.B. Beasley, and J.R. Barrett. 1990. Integrating multiple knowledge sources. Trans ASAE. 33(4):1371-1376.
3. Rewerts, C., B. Engel, J. Rogers, and D. Jones. 1990. An end user interface for CLIPS. AI Applications in Natural Resources. 4(2): 57-65.
4. Engel, B.A., D.B. Beasley, and J.R. Barrett. 1990. Integrating expert systems with conventional problem solving techniques using blackboards. Computers and Electronics in Agriculture. 4(4):287-302.
5. Motz, D., K. Haghighi, and B. Engel. 1990. A blackboard architecture for multiple knowledge source integration in a design environment. AI Applications in Natural Resources. 4(2): 101-109.
6. Engel, B.A., C. Baffaut, J.R. Barrett, J.B. Rogers, D.D. Jones. 1990. Knowledge transformation. Applied Artificial Intelligence. 4:67-80.
7. Wright, J.R., S. Benabdallah, and B.A. Engel. 1990. A normalized user interface for complex simulation models. AI Applications in Natural Resources. 4(2):11-16.

8. Amin Sichani, S. and B.A. Engel. 1990. Prediction of runoff and sediment from agricultural watersheds by a mathematical model: Watershed simulation. Iran Agricultural Research 9(1):1-16.
9. Amin Sichani, S., B.A. Engel, and E.J. Monke. 1990. Prediction of runoff and sediment from agricultural watersheds by a mathematical model: Sediment-bound and soluble phosphorus loadings. Iran Agricultural Research 9(2):75-100.
10. Stone, N.D. and B.A. Engel. 1990. Knowledge-based systems in agriculture and natural resources management. AI Magazine. 11(3):20-22.
11. Srinivasan, R., B.A. Engel, and G. Paudyal. 1991. Expert system for irrigation management (ESIM). Computers and Electronics in Agriculture. 36(3):297-314.
12. Engel, B.A., D.D. Jones, J.R. Wright, and S. Benabdallah. 1991. Selection of an expert system development tool. AI Applications in Natural Resources. 5(1):15-22.
13. Engel, B.A. and D.B. Beasley. 1991. DSS: A dam site selector expert system for education. ASCE Journal of Irrigation and Drainage Engineering. 117(5):774-783.
14. Zhuang, X., B.A. Engel, M. Baumgardner, and P. Swain. 1991. Improving classification of crop residues using digital land ownership data and Landsat TM imagery. Photogrammetric Engineering and Remote Sensing. 57(11):1487-1492.
15. Amin Sichani, S., B.A. Engel, E.J. Monke, J.D. Eigel, and E.J. Kladivko. 1991. Validating GLEAMS with pesticide field data on a Clermont soil. Trans ASAE 34(4):1732-1737.
16. Srinivasan, R. and B.A. Engel. 1991. Effect of slope prediction methods on slope and erosion estimates. Journal of Applied Engineering in Agriculture 7(6):779-783.
17. Engel, B.A., D.D. Jones, and T.L. Thompson. 1992. Advanced information systems: Integrating expert systems with traditional computer-based problem solving techniques. AI Applications in Natural Resources 6(2):5-12.
18. Edan, Y., B.A. Engel, and G.E. Miles. 1993. Intelligent control system simulation of an agricultural robot. Journal Paper No. 13043. Journal of Intelligent and Robotic Systems 8:267-284.
19. Mitchell, J.K., B.A. Engel, R. Srinivasan, R.L. Bingner, and S.S.Y. Wang. 1993. Validation of AGNPS for small mild topography watersheds using an integrated AGNPS/GIS. Advances in Hydro-Sciences and Engineering. pp. 503-510.
20. Brown, S.J. and B.A. Engel. 1993. A comparison of GIS assisted simulated hydrologic response with actual storm event data. Advances in Hydro-Sciences and Engineering. pp. 511-517.
21. Engel, B.A., R. Srinivasan, J. Arnold, C.C. Rewerts, and S.J. Brown. 1993. Nonpoint source (NPS) pollution modeling using models integrated with geographic information systems (GIS). Water Science and Technology 28(3-5):685-690.
22. Pritchard, T., J.G. Lee and B.A. Engel. 1993. Reducing agricultural sediment: An economic analysis of filter strips versus micro-targeting. Water Science and Technology 28(3-5):561-568.
23. Mitchell, J.K., B.A. Engel, R. Srinivasan, and S.S.Y. Wang. 1993. Validation of AGNPS for small watersheds using an integrated AGNPS/GIS system. Water Resources Bulletin 29(5):833-842.
24. Srinivasan, R., and B.A. Engel. 1994. A spatial decision support system for assessing agricultural nonpoint source pollution. Water Resources Research 30(3):441-452.

25. Srinivasan, R., B.A. Engel, J.R. Wright, J.G. Lee, and D.D. Jones. 1994. The impact of GIS-derived topographic attributes on the simulation of erosion using AGNPS. Applied Engineering in Agriculture 10(4):561-566.
26. Zhuang, X., B.A. Engel, D.F. Lozano-Garcia, R.N. Fernandez, and C.J. Johannsen. 1994. Optimization of training data required for neuro-classification. International Journal of Remote Sensing 15(16):3271-3277.
27. Hetzroni, A., G.E. Miles, B.A. Engel, P.A. Hammer, and R.X. Latin. 1994. Machine vision monitoring of plant health. Advanced Space Research 14(11):203-212.
28. Embleton, K., B.A. Engel, and D.D. Jones. 1994. Evaluation of a Farmstead Drinking Water Quality Decision Support System. Applied Engineering in Agriculture. 10(6):863-869.
29. Zhuang, X., B.A. Engel, X. Xiong, and C.J. Johannsen. 1995. Analysis of classification results of remotely sensed data and evaluation of classification algorithms. Photogrammetric Engineering and Remote Sensing. 61(4):427-433.
30. Savabi, R., D.C. Flanagan, B. Hebel, and B.A. Engel. 1995. Application of WEPP and GIS-GRASS to a small watershed in Indiana. Journal of Soil and Water Conservation. 50(5):477-483.
31. Ozer, N., B.A. Engel, and J.E. Simon. 1995. Fusion classification techniques for fruit quality sorting. Trans. of ASAE 38(6):1927-1934.
32. Engel B., Randhir T., Lee J. 1995. A distributed parameter/GIS approach to reduce agricultural pollution. AM J AGR ECON 77: (5) 1358-1358.
33. McCauley, J.D. and B.A. Engel. 1995. Comparison of scene regenerations: SMAP, ECHO, and Maximum Likelihood. IEEE Trans. on Image Proc. 33(6):1313-1316.
34. Engel, B.A., K. Navulur, B. Cooper, and L. Hahn. 1996. Estimating groundwater vulnerability to nonpoint source pollution from nitrates and pesticides on a regional scale. IAHS Publication No. 235:521-526.
35. Muttiah, R.S., B.A. Engel, and D.D. Jones. 1996. Waste disposal site selection using GIS-based simulated annealing. Computers & Geoscience 22(9):1013-1017.
36. Preston J., Engel B., Lalor G.C. 1996. The application of geographic information systems to geochemical studies in Jamaica. ENVIRON GEOCHEM HLTH 18: (3) 99-104.
37. Engel B., Lalor G.C., Vutchkov M.K. 1996. Spatial pattern of arsenic and lead distributions in Jamaican soils. ENVIRON GEOCHEM HLTH 18: (3) 105-111.
38. Chang, Y., J.R. Wright, and B.A. Engel. Evidential reasoning for assessing environmental impact. Civil Engineering Systems (14):55-77.
39. Embleton, K., D. Jones and B. Engel. 1996. Comparative risk assessment primer. Environmental Software 11(4):203-207.
40. McCauley, J.D. and B.A. Engel. 1997. Approximation of noisy bivariate traverse data for precision mapping. Trans. of ASAE 40(1):237-245.
41. Montas, H., J. Eigel, B. Engel, and K. Haghighi. 1997. Deterministic modeling of solute transport in soils with preferential flow pathways - Part 1. Model development. Trans. of ASAE 40(5):1245-1256.
42. Montas, H., J. Eigel, B. Engel, and K. Haghighi. 1997. Deterministic modeling of solute transport in soils with preferential flow pathways - Part 2. Model validation. Trans. of ASAE 40(5):1257-1265.
43. Engel, B.A., H. Manguerra, and J. Smithers. 1997. Hydrologic and water quality modeling of watersheds using SWAT. Management of Landscapes Disturbed by Channel Incision.

44. Engel, B.A., H. Manguerra, J. Lee, and T. Randhir. 1997. A WWW-based water quality decision support system. Management of Landscapes Disturbed by Channel Incision.
45. Manguerra, H.B. and B.A. Engel. 1998. Hydrologic parameterization of watersheds for runoff prediction using SWAT. Journal of the American Water Resources Association 34(5):1149-1162.
46. Navulur, K.C., and B.A. Engel. 1998. Groundwater vulnerability assessment to nonpoint source nitrate pollution on a regional scale using GIS. Trans of ASAE 41(6):1671-1678.
47. Ozer, N., B. Engel and J. Simon. 1998. A Multiple Impact Approach for Non-Destructive Measurement of Fruit Firmness and Maturity. Trans. ASAE 41(3):871-876.
48. Berg, E., B. Engel, and J. Forrest. 1998. Pork carcass composition derived from neural network systems' analysis of electromagnetic scans. Journal of Animal Sciences 76:18-22.
49. Grove M. and Harbor J., and B. Engel. 1998. Composite versus distributed curve numbers: effects on estimates of storm runoff depths. Journal of the American Water Resources Association 34(4):1015-1023.
50. Kim, S., J. Delleur, J.K. Mitchell, B.A. Engel, and S. Walker. 1999. Simulation of runoff in agricultural watersheds with tile drainage using an extended TOPMODEL. TRANS of ASAE.
51. Pandey, S. S. Muthukrishnan, B. Engel and J. Harbor. 1999. Assessing the long-term impact of urban sprawl on runoff and non-point source pollution - a practical Geographical Information Systems (GIS) based method. URISA Proceedings. Horwood Critique Honorable Mention Prize for 1999 from the Urban and Regional Information Systems Association (URISA).
52. Pandey, S., R. Gunn, K.J. Lim, B.A. Engel, and J. Harbor. 2000. Developing Web-based Tool to Assess Long-term Hydrologic Impacts of Land use Change: Information Technology Issues and a Case Study. Journal of Urban and Regional Information System Association (URISA). 12(4): 5-17.
53. Mohtar, R. and B. Engel. 2000. WWW based water quality modeling system to enhance student learning. Journal of Eng Education. January 2000:89-94.
54. Bhaduri, B., J. Harbor, B. Engel, M. Grove. 2000. Assessing watershed-scale, long-term hydrologic impacts of land-use change using a GIS-NPS model. Environmental Management 26(6):643-658.
55. Montas, H. J.; Shirmohammadi, A.; Haghighi, K.; and Engel, B. 2000. Equivalence of bicontinuum and second-order transport in heterogeneous soils and aquifers. Water Resour. Res. Vol. 36 , No. 12 , p. 3427-3438 (2000WR900251)
56. Randhir, T.O., J.G. Lee, and B. Engel. 2000. Multiple criteria dynamic spatial optimization to manage water quality on a watershed scale. TRANS ASAE 43(2):291-299.
57. Lovejoy, S. and B.A. Engel. 2000. Environmental decision-making: How will locals merge watersheds?" *Journal of Soil and Water Conservation* 55(4):434-439.
58. Grove, M., Harbor, J., Engel, B. and Muthukrishnan, S. 2001. Impacts of Urbanization on Surface Hydrology, Little Eagle Creek, Indiana, and Analysis of LTHIA Model Sensitivity to Data Resolution. *Physical Geography*, 22, p.135-153.
59. Pandey, S., Harbor, J., and Engel, B., 2001, Internet based geographic information systems and decision support tools. *Urban and Regional Information Systems* Quick Study Guide.
60. Pandey S., Lim K.J., Harbor J., Engel B., 2001, Assessing the long-term hydrologic impact of land use change – A practical Geographic Information System (GIS) based approach. In:

Singh, R. (Ed.), Urban sustainability in the context of Global Change. Science Publishers, Inc., Enfield, New Hampshire. pp. 247-259.
61. Homes, M., J.R. Frankenberger, and B.A. Engel, 2001, Susceptibility of Indiana watersheds to herbicide contamination. Journal of the American Water Resources Association 37(4):987-1000.
62. Choi, K.J., J.D. Choi, K.J. Lim, and B.A. Engel. 2001. Nonpoint pollution potential assessment in Soyand-dam watershed. Korean National Committee on Irrigation and Drainage Journal 8(2):27-34.
63. Kim, Y., Engel, B., Lim, K., Larson, V., and Duncan B., 2002 Runoff Impacts of Land-Use Change in Indian River Lagoon Watershed, Journal of Hydrological Engineering, 7(3):245-251.
64. Choi, J.Y., B.A. Engel, H.W. Chung. 2002. Daily streamflow modeling and assessment based on the curve-number technique. Hydrological Processes 16:3131-3150.
65. O'Neal, M.R., B.A. Engel, D.R. Ess, J.R. Frankenberger. 2002. Neural network prediction of maize yield using alternative data coding algorithms. Biosystems engineering 83(10):31-45.
66. Miller, P.S., J. K. Mitchell, R. A. Cooke, B. A. Engel. 2002. A wetland to improve agricultural subsurface drainage water quality. Transactions of the ASAE(45)5:1305-1317.
67. Gunn, R.L, R.H. Mohtar, and B.A. Engel. 2002. World-wide-web-based soil and water quality modeling in undergraduate education. J. Nat. Resour. Life Sci. Educ. 31:.141-147.
68. Pandey, S, J. Harbor, J.Y. Choi, and B. Engel. 2002. Internet based Planning Decision Support System. Urban and Regional Information Systems Association. Pp. (*Received Horwood Honorable Mention Award*).
69. Renschler, C.S., D.C. Flanagan, B.A. Engel, L.A. Kramer, K.A. Sudduth. 2003. Site-specific decision-making based on RTK GPS survey and six alternative elevation data sources: I. Watershed topography and delineation. Transactions of the ASAE 45(6):1883-1896.
70. Lim, K.J. and B.A. Engel. 2003. Extension and enhancement of national agricultural pesticide risk analysis WWW decision support system to include nutrients. Computers and Electronics in Agriculture 38(2003):227-236.
71. Choi, J.Y. and B.A. Engel. 2003. Real time watershed delineation system using web-GIS. Journal of Computing in Civil Engineering 17(3):189-196.
72. Engel, B.A., J.Y. Choi, J. Harbor, and S. Pandey. 2003. Web-based DSS for hydrologic impact evaluation of small watershed land use changes. Computers and Electronics in Agriculture 39 (2003):241-249.
73. Choi, J.Y., B.A. Engel, S. Muthukrishnan, and J. Harbor. 2003. GIS based long-term hydrologic impact evaluation for watershed urbanization. Journal of American Water Resources Association 39(3):623-635.
74. Rochon, G.L., C.J. Johannsen, D.A. Landgrebe, B.A. Engel, J.M. Harbor, S. Majumder, and L.L. Biehl. 2003. Remote sensing as a tool for achieving and monitoring progress toward sustainability. Clean Techn Environ Policy 5(2003):310-316.
75. Laflen, J.M., D.C. Flanagan, and B.A. Engel. 2004. Soil erosion and sediment yield prediction accuracy using WEPP. Journal of the American Water Resources Association (JAWRA) 40(2):289-297.
76. Bracmort, K.S., B.A. Engel, and J.R. Frankenberger. 2004. Evaluation of structural best management practices 20 years after installation: Black Creek Watershed, Indiana. Journal of Soil and Water Conservation 191-196.

77. Tang, Z., B. A. Engel, J. Choi, K. Sullivan, M. Sharif , K. J. Lim. 2004. A Web-based DSS for erosion control structure planning. Applied Engineering in Agriculture 20(5):707-714.
78. Shi, Y., Jeremiah Asher, Jon Bartholic, Jin-Yong Choi, Bernie Engel, Rick Farnsworth. 2004. An Online WebGIS-based Hierarchical Watershed Decision Support System for United States. Environmental Informatics Archives, Volume 2 (2004), 838-845.
79. Choi, J-Y, B. A. Engel, and R. Farnsworth. 2005. Web-based GIS and spatial decision support system for watershed management. Journal of Hydroinformatics 7(3):165-174.
80. Frimpong, E.A., T. M. Sutton, K.J. Lim, P. J. Hrodey, B. A. Engel, T. P. Simon, J. G. Lee, and D.C. Le Master. 2005. Determination of optimal riparian forest buffer dimensions for stream biota–landscape association models using multimetric and multivariate responses. Can. J. Fish. Aquat. Sci. 62: 1–6 (2005).
81. Vazquez-Amabile, G.G., and B.A. Engel. 2005. Use of SWAT to Compute Groundwater Table Depth and Streamflow in the Muscatatuck River Watershed. Transactions of the ASAE 48(3):991-1003.
82. Tang, Z., B.A. Engel, B.C. Pijanowski, K.J. Lim. 2005. Forecasting land use change and its environmental impact at a watershed scale. Journal of Environmental Management 76(1):35-45.
83. Saxton G. and B. Engel. 2005. A Survey of Soil Sample Handling Procedures of State Pesticide Regulatory Agencies. *Journal of Environmental Forensics* 6(2):105-108.
84. Mitchell Adeuya, R. K., K. J. Lim, B. A. Engel, M. A. Thomas. 2005. Modeling the average annual nutrient losses of two watersheds in Indiana using GLEAMS-NAPRA. Transactions of the ASAE Vol. 48(5): 1739−1749.
85. Saxton, G. and B. Engel. 2005. Permethrin Insecticide and Soil Sample Handling Techniques of State Regulatory Agencies. Environmental Forensics 6(4):327-333.
86. Frimpong, E., T. Sutton, B. Engel, T. Simon. 2005. Spatial-Scale Effects on Relative Importance of Physical Habitat Predictors of Stream Health. Environmental Management 36(6):899-917.
87. Lim, K.J., B.A. Engel, Z. Tang, S. Muthukrishnan, J. Choi, K. Kim. 2006. Effects of calibration on L-THIA GIS runoff and pollutant estimation. Journal of Environmental Management. 78:(1):35-43.
88. Lim, K.J., M. Sagong, B.A. Engel, Z. Tang, J. Choi and K. Kim. 2005. GIS-based sediment assessment tool. CATENA 64(1):61-80. doi:10.1016/j.catena.2005.06.013
89. Tang, Z., B. A. Engel, K. J. Lim, B. C. Pijanowski, and J. Harbor. 2005. Minimizing the impact of urbanization on long term runoff. Journal of the American Water Resources Association 1347-1359.
90. Lim, K.J., B. A. Engel, Z. Tang, J. Choi, K.S. Kim, S. Muthukrishnan, and D. Tripathy. 2005. Automated web GIS based hydrograph analysis tool, WHAT. Journal of the American Water Resources Association 41(6):1407-1416.
91. J.-Y. Choi, B. A. Engel, L. Theller, J. Harbor. 2005. Utilizing web-based GIS and SDSS for hydrological land use change impact assessment. TRANS of ASAE 48(2):815-822.
92. Muthukrishnan, S., J. Harbor, K. J. Lim, and B. A. Engel. 2006. Calibration of a Simple Rainfall-runoff Model for Long-term Hydrological Impact Evaluation. Journal of Urban and Regional Information Systems Association 18(2):35-42.
93. Arabi, M., R. S. Govindaraju, M. M. Hantush, and B. A. Engel. 2006. Role of watershed subdivision on modeling the effectiveness of best management practices with SWAT. Journal of American Water Resources Association 42(2):513-528.

94. Bracmort, K. S., M. Arabi, J. R. Frankenberger, B. A. Engel, and J. G. Arnold. 2006. Modeling long-term water quality impact of structural BMPs. TRANS of ASABE 49(2):367-374.
95. G. Vazquez-Amabile, B. A. Engel, D. C. Flanagan. 2006. Modeling and risk analysis of nonpoint-source pollution caused by atrazine using SWAT. TRANS of ASABE 49(3): 667−678
96. Mercuri, P., B. Engel, C. Johannsen. 2006. Evaluation and accuracy assessment of high-resolution IFSAR DEMs in low-relief areas. International Journal of Remote Sensing 27(13):2767-2786.
97. Lim, K.J., B.A. Engel, Z. Tang. 2006. Identifying regional groundwater risk areas using a WWW GIS model system. *Int. J. Risk Assessment and Management Vol. 6(4/5/6):316-329.*
98. Larose, M., G. Heathman, L.D. Norton, B. Engel. 2007. Hydrologic and atrazine simulation of the Cedar Creek watershed using the SWAT model. Journal of Environmental Quality 36:521-531.
99. Pantaleoni, E., B.A. Engel, C.J. Johannsen. 2007. Identifying agricultural flood damage using Landsat imagery. Precision Agriculture 8:27-36.
100. Hamilton, R. M. , R. E. Foster, T. J. Gibb, C. S. Sadof, J. D. Holland, and B. A. Engel. 2007. Distribution and dynamics of Japanese beetles along the Indianapolis airport perimeter and the influence of land use on trap catch. Environ. Entomol. 36(2): 287-296.
101. Zhao, L., C. X. Song, V. Merwade, Y. M. Kim, R. Kalyanam, D. Ebert, B. Engel, R. Govindaraju, M. Huber, C. Jafvert, D. Niyogi and S. Prabhakar. 2007. Interweaving data and computation for end-to-end environmental exploration on the TeraGrid. Proceedings of the TeraGrid 2007 Conference, Madison, Wisconsin, June 2007.
102. Arabi, M., R. S. Govindaraju, B. Engel, and M. Hantush. 2007. Multiobjective sensitivity analysis of sediment and nitrogen processes with a watershed model, Water Resour. Res., 43, W06409, doi:10.1029/2006WR005463.
103. Saxton, G. and B. Engel. 2007. Fipronil insecticide and soil-sample handling techniques of state agencies. Environmental Forensics 8(3):283-288.
104. Engel, B., D. Storm, M. White, J. Arnold, M. Arabi. 2007. A Hydrologic/Water Quality Model Application Protocol. Journal of American Water Resources Association 43(5):1223-1236.
105. Arabi, M., J. R. Frankenberger, B. A. Engel and J.G. Arnold. 2007. Representation of agricultural conservation practices with SWAT. Hydrol. Process. (2007), DOI: 10.1002/hyp.6890.
106. Mohtar, R.H., T. Zhai, J.Y. Choi, B.A. Engel and J.J. Fast. 2007. Outcome-Based Evaluation of Environmental Modeling Tools for Classroom Learning. *International Journal of Engineering Education* 23(4):661-671.
107. Miller, P. S., R. H. Mohtar, and B. A. Engel. 2007. Water quality monitoring strategies and their effects upon mass load calculation. TRANS of ASABE 50(3):817-829.
108. Thomas, M., B. Engel, M. Arabi, T. Zhai, R. Farnsworth, J. Frankenberger. 2007. Evaluation of nutrient management plans using an integrated modeling approach. Applied Engineering in Agriculture 23(6):747-755.
109. Gaffer, R., D. Flanagan, M. Denight, B. Engel. 2008. Geographical information system erosion assessment at a military training site. Journal of Soil and Water Conservation 63(1):1-10.

110. Rochon, G., C. Johannsen, D. Landgrebe, B. Engel, J. Harbor, S. Majumder, and L. Biehl. 2008. Remote sensing as a tool for achieving and monitoring progress toward sustainability. Clean Technologies and Environmental Policy 5(3-4):310-316.
111. Carter, P.G., C. J. Johannsen, and B. A. Engel. 2008. Recognizing Patterns Within Cropland Vegetation: A Crop Anomaly Classification System. Journal of Terrestrial Observation 1(1): http://docs.lib.purdue.edu/jto/.
112. Getman, D.J. J. M. Harbor, C. J. Johannsen, B. A. Engel, and G. Shao. 2008. Improving the Accuracy of Historic Satellite Image Classification by Combining Low-Resolution Multispectral Data with High-Resolution Panchromatic Data. Journal of Terrestrial Observation 1(1): http://docs.lib.purdue.edu/jto/.
113. Quansah, J., B.A. Engel, I. Chaubey. 2008. Tillage practices usage in early warning prediction of atrazine pollution. TRANS of ASABE 51(4):1311-1321.
114. R. S. Govindaraju, B. Engel, D. Ebert, B. Fossum, M. Huber, C. Jafvert, S. Kumar, V. Merwade, D. Niyogi, L. Oliver, S. Prabhakar, G. Rochon, C. Song, and L. Zhao. 2009. Vision of Cyberinfrastructure for End-to-End Environmental Explorations (C4E4), J. Hydrologic Engrg. Volume 14, Issue 1, pp. 53-64.
115. Moriasi, D.N., J.G. Arnold, G. G. Vazquez-Amábile, B. A. Engel, and C.G. Rossi. 2009. Incorporation of a new shallow water table depth algorithm into SWAT2005. Trans. ASABE 52(3):771-784.
116. Mark A. Thomas, Bernard A. Engel, and Indrajeet Chaubey. 2009. Thomas, Water Quality Impacts of Corn Production to Meet Biofuel Demands. Journal of Environmental Engineering 135(11)1123-1135.
117. Davis, AY, BC Pijanowski, K Robinson, BA Engel. 2010. The environmental and economic costs of sprawling parking lots in the United States. *Land Use Policy* 27 (2), 255-261.
118. Deb, D. BA Engel, J. Harbor, L. Hahn, KJ Lim, T. Zhai. 2010. Investigating Potential Water Quality Impacts of Fungicides Used to Combat Soybean Rust in Indiana. *Water, Air, and Soil Pollution* 207 (1-4), 273-288.
119. Engel, B., Indrajeet Chaubey, Mark Thomas, Dharmendra Saraswat, Patrick Murphy & Budhendra Bhaduri. 2010. Biofuels and water quality: Challenges and opportunities for simulation modeling. Biofuels 1(3):463-477.
120. ShikPark, Y., Jonggun Kim, NamWon Kim, Seong Joon Kim, Ji-Hong Jeon, Bernard A. Engel, Wonseok Jang, Kyoung Jae Lim. 2010. Development of New R, C and SDR Modules for the SATEEC. Computers and Geosciences. 10.1016/j.cageo.2009.11.005.
121. Lim, K.J., Y.S. Park, J. Kim, Y.C. Shin, N.W. Kim, S.J. Kim, J.H. Jeon, B.A. Engel. 2010. Development of genetic algorithm-based optimization module in WHAT system for hydrograph analysis and model application. Computers and Geosciences 10.1016/j.cageo.2010.01.004.
122. Jeon, J.H., K. J. Lim, C.G. Yoon, and B.A. Engel. 2011. Multiple segmented reaches per subwatershed modeling approach for improving HSPF-Paddy water quality simulation. Paddy Water Environ (2011) 9:193–205. DOI 10.1007/s10333-010-0218-2.
123. Maringanti, C., I. Chaubey, M. Arabi, and B. Engel. 2011. Application of a multi-objective optimization method to provide least cost alternatives for NPS pollution control. *Environmental Management.* DOI: 10.1007/s00267-011-9696-2.

124. Thomas, M.A., B.A. Engel and I. Chaubey. 2011. Multiple corn-stover removal rates for cellulosic biofuels and long-term water quality impacts. *Journal of Soil and Water Conservation* 66(6):431-444. doi:10.2489/jswc.66.6.431
125. Ahiablame, L.M., I. Chaubey, D.R. Smith, and B.A. Engel. 2011. Effect of tile effluent on nutrient concentration and retention efficiency in agricultural drainage ditches. *Agricultural Water Management 98(8):1271-1279.* doi:10.1016/j.agwat.2011.03.002
126. Chaubey, I., K. Cherkauer, M. Crawford, and B. Engel. 2011. Multi-scale sensing and modeling framework: integrating field to continental scale. *The Bridge: 41(3): 39-46. Invited Article, Published by the National Academy of Engineering.*
127. Cibin, R., I. Chaubey, and B. Engel. 2011. Watershed scale impacts of corn stover removal for biofuel on hydrology and water quality. *Hydrological Processes. DOI: 10.1002/hyp.8280.*
128. Ahiablame, L., J. Ohlemiller, E. Stein, S. Noel, and B. Engel. 2011. Bringing Clean Water to Rural Communities in Developing Countries: A Well for the Community in Agrippa Todzi, Togo. Journal of Rural and Community Development 6, 2 (2011) 124–134.
129. Kim , J., B. A. Engel, Y. S. Park, L. Theller, I. Chaubey, D.S.Kong, K. J. Lim. 2012. Development of Web-based Load Duration Curve system for analysis of total maximum daily load and water quality characteristics in a waterbody. Journal of Environmental Management 97 (2012) 46-55.
130. Ahiablame, L., B. Engel and T. Venort. 2012. Improving Water Supply Systems for Domestic Uses in Urban Togo: The Case of a Suburb in Lomé. *Water* **2012**, *4*, 123-134; doi:10.3390/w4010123.
131. Nam, W.H., J.Y. Choi, S.H. Yoo, and B. A. Engel. 2012. A real-time online drought broadcast system for monitoring soil moisture index. KSCE Journal of Civil Engineering (2012) 16(3):357-365. DOI 10.1007/s12205-012-1357-3.
132. Ahiablame, L., Engel, B., Chaubey, I. (2012). Representation and Evaluation of Low Impact Development Practices with L-THIA-LID: An Example for Planning. Environment and Pollution 1(2)(2012):1-13. doi:10.5539/ep.v1n2p1.
133. Gunn, R., Martin, A., Engel, B., Ahiablame, L. (2012). Development of Two Indices for Determining Hydrologic Implications of Land Use Changes in Urban Areas. Urban Water 9(4):239–248. DOI:10.1080/1573062X.2012.660957.
134. Ahiablame, L., Engel, B., Chaubey, I. (2012). Effectiveness of Low Impact Development Practices: Highlights of the Current Knowledge and Suggestions for Future Research. Water, Air, & Soil Pollution (2012) 223:4253–4273. DOI 10.1007/s11270-012-1189-2
135. Ahiablame, L., I. Chaubey, B. Engel, K. Cherkauer, V. Merwade. 2012. Estimation of annual baseflow at ungauged sites in Indiana USA. Journal of Hydrology. DOI information: 10.1016/j.jhydrol.2012.10.002.
136. Ahiablame, L. M., B. A. Engel, I. Chaubey. 2013. Effectiveness of low impact development practices in two urbanized watersheds: Retrofitting with rain barrel/cistern and porous pavement. Journal of Environmental Management 119 (2013) 151-161.
137. Ascough II, J. C., D. C. Flanagan, M. A. Nearing, B. A. Engel. 2013. Sensitivity and first-order/Monte Carlo uncertainty analysis of the WEPP hillslope erosion model. TRANS of ASABE 56(2):437-452.
138. Engel, B.A., M. Smith, J. B. Fisher, R. Olsen, L. Ahiablame. 2013. Phosphorus Mass Balance of the Illinois River Watershed in Arkansas and Oklahoma. *Journal of Water Resource and Protection*, 2013, 5, 591-603 doi:10.4236/jwarp.2013.56060.

139. Cox, T., B.A. Engel, R.L. Olsen, J.B. Fisher, A.D. Santini, and B.J. Bennett. 2013. Relationships between stream phosphorus concentrations and drainage basin characteristics in a watershed with poultry farming. Nutrient Cycling in Agroecosystems: Volume 95, Issue 3 (2013): 353-364.
140. Zhang, Y., L. Ahiablame, B. Engel and J. Liu. 2013. Regression Modeling of Baseflow and Baseflow Index for Michigan USA. *Water* 2013, *5*, 1797-1815; doi:10.3390/w5041797.
141. Ahmadia, M., M. Arabi, D.L. Hoag, and B. A. Engel. 2013. A Mixed Discrete-Continuous Variable Multiobjective Genetic Algorithm for Targeted Implementation of Nonpoint Source Pollution Control Practices. Water Resources Research 49:8344-8356.
142. Jang, C., D. Kum, Y. Jung, K. Kim, D. S. Shin, B. A. Engel, Y.Shin, and K. J. Lim. 2013. Development of a Web-Based L-THIA 2012 Direct Runoff and Pollutant Auto-Calibration Module Using a Genetic Algorithm. *Water* 2013, *5*, 1952-1966; doi:10.3390/w5041952.
143. Thomas, M.A., Ahiablame, L.M., B.A. Engel, I. Chaubey. 2014. Modeling water quality impacts of cellulosic biofuel production from corn silage. Bioenergy Research 7:636-653. DOI 10.1007/s12155-013-9391-7.
144. Ahmadi, M., M. Arabi, D. G. Fontane, B. A. Engel. 2014. Application of Multi Criteria Decision Analysis with a Priori Knowledge to Identify Optimal Nonpoint Source Pollution Control Plans. Journal of Water Resources Management and Planning DOI: 10.1061/(ASCE)WR.1943-5452.0000455.
145. Jang , W.S., J. Kim, B. A. Engel, S.W. Kang, Y. Park, H. Yoon, K. J. Lim, Y. Jung and Y. Shin. 2014. Development of a prototype web GIS-based disaster management system for safe operation of the next generation bimodal tram, South Korea—focused flooding and snowfall. Sustainability 2014, 6, 1776-1795; doi:10.3390/su6041776.
146. Park , Y.S., B. A. Engel and J. Harbor. 2014. A Web-Based Model to Estimate the Impact of Best Management Practices. *Water* 2014, *6*(3), 455-471; doi:10.3390/w6030455.
147. Ahmadia, M., M. Arabi, J. Ascough, and B. A. Engel. 2014. Toward improved calibration of watershed models: multisite multiobjective measures of information. Environmental Modelling & Software 59:135-145.
148. Jeon, J.H., K.J. Lim and B. A. Engel. 2014. Regional Calibration of SCS-CN L-THIA Model: Application for Ungauged Basins. *Water* 2014, *6*(5), 1339-1359; doi:10.3390/w6051339
149. Park, Y.S. and B. A. Engel. 2014. Use of Pollutant Load Regression Models with Various Sampling Frequencies for Annual Load Estimation. *Water* 2014, *6*(6), 1685-1697; doi:10.3390/w6061685.
150. Wang, Y.B., P.T. Wu, X.N. Zhao, B.A. Engel. 2014. Virtual water flows of grain within China and its impact on water resource and grain security in 2010. Ecological Engineering 69(2014):255-264. http://dx.doi.org/10.1016/j.ecoleng.2014.03.057
151. Park, Y.S. and B.A. Engel. 2014. A Web-Based Tool to Interpolate Nitrogen Loading Using a Genetic Algorithm. *Water* 2014, *6*, 2770-2781; doi:10.3390/w6092770.
152. Thomas, M.A., L. M. Ahiablame, B.A. Engel, I. Chaubey. 2014. Modeling Water Quality Impacts of Growing Corn, Switchgrass, and *Miscanthus* on Marginal Soils. Journal of Water Resource and Protection, 2014, 6, 1352-1368.
153. Jeon, J.H., C.G. Park and B.A. Engel. 2014. Comparison of Performance between Genetic Algorithm and SCE-UA for Calibration of SCS-CN Surface Runoff. *Water* 2014, *6*, 3433-3456; doi:10.3390/w6113433.

154. Park, Y.S., B. A. Engel, J. Kim, L. Theller, I. Chaubey, V. Merwade, K. J. Lim. 2014. A web tool for STORET/WQX water quality data retrieval and best management practice scenario suggestion. Journal of Environmental Management 150 (2015) 21-27.
155. Wang, Y.B., P.T. W, B.A. Engel, S.K. Sun. 2014. Application of water footprint combined with a unified virtual crop pattern to evaluate crop water productivity in grain production in China. Science of the Total Environment 497–498 (2014) 1–9.
156. Wang, Y.B., P.T. Wu, B.A. Engel, and S.K. Sun. 2015. Comparison of volumetric and stress-weighted water footprint of grain products in China. Ecological Indicators 48 (2015) 324–333.
157. Liu, Y., V.F. Bralts, B.A. Engel. 2015. Evaluating the effectiveness of management practices on hydrology and water quality at watershed scale with a rainfall-runoff model. Science of The Total Environment, Volume 511, 1 April 2015, Pages 298–308. doi:10.1016/j.scitotenv.2014.12.077
158. Feng Q, Chaubey I, Her YG, Cibin R, Engel B, Volenec J and Wang X. 2015. Hydrologic and water quality impacts and biomass production potential on marginal land. Environ Modell Softw 2015; 72:230-38.
159. Martin, A.R., L.H. Ahiablame, B.A. Engel. 2015. Modeling low impact development in two Chicago communities. *Environmental Science: Water Research & Technology*, 2015, **1**, 855 – 864.
160. Park, Y.S. and B.A. Engel. 2015. Analysis for regression model behavior by sampling strategy for annual pollutant load estimation. J. Environ. Qual. doi:10.2134/jeq2015.03.0137.
161. Park, Y.S., B. A. Engel, J. Frankenberger and H. Hwang. 2015. A web-based tool to estimate pollutant loading using LOADEST. *Water* 2015, *7*, 4858-4868; doi:10.3390/w7094858.
162. Guo, T., B. A. Engel, G. Shao, J. G. Arnold, R. Srinivasan, and J. R. Kiniry. 2015. Functional approach to simulating short-rotation woody crops in process-based models. BioEnergy Research. Volume 8, Issue 4 (2015):1598-1613. DOI 10.1007/s12155-015-9615-0.
163. Zhang, Y., B. A. Engel, L. Ahiablame, and J. Liu. 2015. Impacts of climate change on mean annual water balance for watersheds in Michigan, USA. *Water* 2015, *7*, 3565-3578; doi:10.3390/w7073565.
164. Jeon, J.H., C.G. Park and B. A. Engel. 2015. Evaluating Effects of Poultry Waste Application on Phosphorus Loads to Lake Tenkiller. *Sustainability* 2015, *7*, 10115-10134; doi:10.3390/su70810115.
165. Liu, Y., L.M. Ahiablame, V.F. Bralts, and B.A. Engel. 2015. Enhancing a rainfall-runoff model to assess the impacts of BMPs and LID practices on storm runoff. Journal of Environmental Management Volume 147, 1 January 2015, Pages 12–23. doi:10.1016/j.jenvman.2014.09.005.
166. Engel, B.A., L.M. Ahiablame, J. D. Leroy. 2015. Modeling the impacts of urbanization on lake water level using L-THIA. Urban Climate 14 (2015) 578–585. dx.doi.org/10.1016/j.uclim.2015.10.001.
167. Liu, Y., L.O. Theller, B.C. Pijanowski, B.A. Engel. 2016. Optimal selection and placement of green infrastructure to reduce impacts of land use change and climate change on hydrology and water quality: An application to the Trail Creek Watershed, Indiana. Science of the Total Environment 553 (2016) 149–163. dx.doi.org/10.1016/j.scitotenv.2016.02.116.

168. Wright, T.J., Y. Liu, N. J. Carroll, L. M. Ahiablame, B, A. Engel. 2016. Retrofitting LID Practices into Existing Neighborhoods: Is It Worth It? Environmental Management (2016) 57:856-867. DOI 10.1007/s00267-015-0651-5.

b. Refereed Book Chapters

1. Engel, B.A., R. Thieme, A.D. Whittaker. 1989. Knowledge representation and reasoning. Chapter 5, In: J.R. Barrett and D.D. Jones (eds.), Knowledge Engineering in Agriculture, ASAE Monograph, ASAE, St. Joseph, MI. p.47-76.
2. Rhykerd, R.L., L.M. Rhykerd, B.A. Engel, C.L. Rhykerd Jr., and C.L. Rhykerd. 1991. Knowledge engineering for management of *Medicago sativa L*. In: Advances in Agronomy. Compilers International. Trivandrum, India, pp. 61-70.
3. Engel, B.A., R. Srinivasan, and C. Rewerts. 1993. A Spatial Decision Support System for Modeling and Managing Agricultural Non-Point Source Pollution. In: Environmental Modeling with GIS, M.F. Goodchild, B.O. Parks, and L.T. Steyart (Eds.), Oxford University Press, New York, NY, pp. 231-237.
4. Engel, B.A. and K. Navulur. 1997. The Role of Geographical Information Systems in Groundwater Engineering. In: Groundwater Engineering, J. Delleur (Ed.), McGraw Hill. pp. 21-1 – 21-16.
5. Pandey, S., J. Harbor and B. Engel. 2000. Internet Based Geographic Information Systems and Decision Support Tools. URISA, Park Ridge, IL, 36 p.
6. Mohtar, R.H. T. Zhai, J-Y Choi, and B. Engel. 2005. Web-based GIS Hydrologic Modeling for Siting Water Harvesting Reservoir. In: Watershed Management in Dry Areas, Challenges and Opportunities. Eds. Bruggeman, A., M. Ouessar, and R. H. Mohtar. ICARDA Press. Alleppo Syria.
7. Engel, B.A., K.J. Lim and K. Navulur. 2006. The Role of Geographical Information Systems in Groundwater Engineering. In: Groundwater Engineering, J. Delleur (Ed.), Second Edition. CRC. pp. 30-1 – 30-17.
8. Lim, K.J., Y. S. Park, B. A. Engel and N. W. Kim. 2012. SATEEC GIS System for Spatiotemporal Analysis of Soil Erosion and Sediment Yield. In Soil Erosion Studies, D. Godone and S. Stanchi, InTech, Chapter 13. p. 253-280.

c. Conference Proceedings

Professor Engel has authored or co-authored 85 papers for the proceedings of 51 national and international conferences.

d. Research Papers Distributed and Presented at National and International Meetings

Professor Engel has authored or co-authored more than 195 papers that have been presented and distributed at national and international meetings.

Graduate Students Advised

Professor Engel has served as major professor for 45 graduate students and currently serves as major professor for 8 graduate students. His former students hold various positions including research engineers in federal laboratories, engineers in consulting firms, research scientists/engineers in industry, manager of a watershed management district and professors at universities. He has also significantly influenced the graduate education of many other graduate students having served on more than 115 graduate advisory committees. Professor Engel has

served on graduate advisory committees for students from Agronomy, Forestry and Natural Resources, Agricultural Economics, Animal Science, Entomology, Horticulture, Civil Engineering, and Earth and Atmospheric Sciences.

Research Grants
Professor Engel and his co-investigators have obtained more than $26.6 million in support of his research efforts in the past 28 years through more than 140 grants. He has been especially successful in obtaining support from federal agencies including US EPA, USDA, NSF, DOE, USGS and NASA.

EXCELLENCE IN TEACHING

Dr. Engel's teaching contributions have been very significant, both on- and off-campus: he has updated and revised existing courses, developed new courses, and taught special topics courses and workshops. Much of his impact has been in GIS science, expert systems, modeling and teaching how to apply such knowledge to solving natural resources and environmental problems. Not only is he introducing state-of-the-art subject materials to undergraduate, graduate and adult students, he is also developing new pedagogical techniques, e.g., interactive digital multi-media learning modules. While on sabbatical leave at the NASA Kennedy Space Center in 1994, he taught his ABE 565 (Agricultural Systems Engineering) class over the Internet. In 2000, 2001, and 2002 he taught ABE 526 (Watershed Systems Design) through Web-based materials to students in Europe. He has developed Web-based environmental modeling tools that have proven very effective for educational uses.

Dr. Engel has developed or assisted with the development of more than 75 computer-based multimedia programs for educational use primarily in the areas of environmental and soil and water resources protection (see http://www.epa.gov/glnpo/seahome) that have been used in more than 1.5 million sessions annually in each of the past 5 years. The hypermedia paradigm for these programs enables them to be used by federal and state agencies, for college classes and for students in junior and senior high school. Many of the multimedia/hypermedia programs have been used to teach ASM 336, Environmental Systems Management, a new course developed by Dr. Engel. Approximately one-half the course lectures in this class were replaced by programs developed by Dr. Engel. Testing of these multimedia programs by Dr. Engel has shown that they are as effective as lectures and that such programs maintain their effectiveness even when extensive use of such modules is made, such as in ASM 336.

Dr. Engel has taught several workshops on the development of multimedia applications and computer-assisted instruction including two one-week workshops in Indonesia and a one-week workshop in Puerto Rico. He currently serves on the advisory board for a European effort to develop extensive distance education materials related to geographic information systems (GIS).

Courses Taught in Last Three Years
The courses that Dr. Engel has taught in recent years are briefly described below. In prior years he taught Soil and Water Conservation Engineering (design of grassed waterways, terraces, surface and subsurface drainage systems, and irrigation systems), Soil and Water Management,

Agricultural Systems Engineering, Environmental Systems Management, Introduction to Surveying (3 credit version), GIS, Graduate Seminar, and Watershed Systems Design.

ASM 216 Introduction to Surveying, 5 weeks, Class 2, Laboratory 3, cr. 1. Spring semesters since 2012.

EPICS Engineering Projects In Community Service, Laboratory 2, cr. 1. Each semester since Fall 2009.

ABE 484 and 486 Engineering Design and ASM 494 and 495 Agricultural Systems Management Capstone. Class 1, Laboratory 8, cr. 4, Fall and spring semesters since 2011. Co-taught with Dr. Bob Stwalley since 2013.

EXCELLENCE IN ENGAGEMENT AND SERVICE

Professor Engel makes numerous outreach presentations and has conducted numerous workshops related to the application of environmental education software and decision support systems (described briefly in the research section of this document). In the last three years, he has made more than 10 outreach presentations on the application of web-based decision support tools including the L-THIA (Long-Term Hydrologic Impact Assessment) model, web-based watershed delineation, SEDSPEC, and NAPRA (National Agricultural Pesticide Risk Assessment). A significant base of users has been established for these tools; for example, L-THIA averages more than 2,500 user sessions per month.

University Service

Professor Engel has provided service to the university beyond that as Head of Agricultural and Biological Engineering. For example, in the past 5 years he has served as:

Forestry and Natural Resources Head Search Chair
University Accreditation Criterion 1 committee co-chair
University COACH Committee
College of Agriculture strategic planning committee

Memberships in Professional Societies and Organizations

American Society of Agricultural and Biological Engineers (ASABE), 1987-present.
National Society of Professional Engineers (NSPE), 1987-present.
Soil and Water Conservation Society (SWCS), 1988-present.
American Society of Civil Engineers (ASCE), 1988-present.
Sigma Xi (honor society, scientific research), 1986.
Phi Kappa Phi (national scholastic honor society), 1986.
Alpha Epsilon (honor society, agricultural engineering), 1987.
Gamma Sigma Delta (honor society, agriculture), 1986.
Alpha Mu (honor society, agricultural systems management), 2003

Professional Service Activities

1. American Society of Agricultural Engineers (ASAE) KS-14: Knowledge Engineering Committee, 1987-90, 1992-present, Vice-Chair in 1989-90, Chair in 1990-91.
2. American Society of Agricultural Engineers KS-15: Simulation Committee, 1988-90.

3. American Society of Agricultural Engineers (ASAE) KS-16: Geographic Information Systems Committee, 1990-present, provided leadership in establishment of this new committee. Secretary 1992-93, Vice-Chair 1993-1994, chair 1995-1996.
4. American Society of Agricultural Engineers (ASAE) SW-215: Hydrologic Systems Committee, 1988-present.
5. American Society of Agricultural Engineers (ASAE) SW-225: Conservation Systems Committee, 1987-89.
6. S-211: Hydrologic/Water Quality Modeling of Sediment and Chemical Movement, Southern Region USDA Committee, 1988-91.
7. S-249: Hydrologic and Water Quality Modeling, Southern Region USDA Committee, 1992-1996, Co-wrote proposal to form committee.
8. S-273 Ecological and Water Quality Modeling, Southern Region USDA Committee, 1997-2002.
9. US EPA National Land Use Change Committee 1998-2000.
10. MUTATE GIS Distance Education Advisory Board, European Union, 1998-2002.
11. Global Livestock Collaborative Research and Support Projects Program Advisory Committee, 2000-2005.
12. ASABE ED210 Agricultural and Biological Engineering Academic Heads, 2009-2010, Vice Chair, 2010-2011 Chair.
13. NCAC 016 North Central Agricultural and Biological Engineering Academic Programs Regional Committee. Chair 2011.
14. DOE Oak Ridge Biofuels Advisory Committee. 2008-2013.
15. BARD Technical Advisory Committee 2010-2013.
16. FieldWatch Board Member, 2012-present

EXHIBIT 51

United States
Environmental Protection
Agency

EPA/100/K-09/003 | March 2009
www.epa.gov/crem

Guidance on the Development, Evaluation, and Application of Environmental Models

Office of the Science Advisor
Council for Regulatory Environmental Modeling

EPA/100/K-09/003
March 2009

Office of the Science Advisor

Guidance on the Development, Evaluation, and Application of Environmental Models

Council for Regulatory Environmental Modeling
U.S. Environmental Protection Agency
Washington, DC 20460

Preface

This *Guidance on the Development, Evaluation, and Application of Environmental Models* was prepared in response to a request by the U.S. Environmental Protection Agency (EPA) Administrator that EPA's Council for Regulatory Environmental Modeling (CREM) help continue to strengthen the Agency's development, evaluation, and use of models (http://www.epa.gov/osp/crem/library/whitman.PDF).

A draft version of this document (http://cfpub.epa.gov/crem/crem_sab.cfm) was reviewed by an independent panel of experts established by EPA's Science Advisory Board and revised by CREM in response to the panel's comments.

This final document is available in printed and electronic form. The electronic version provides direct links to the references identified in the document.

Disclaimer

This document provides guidance to those who develop, evaluate, and apply environmental models. It does not impose legally binding requirements; depending on the circumstances, it may not apply to a particular situation. The U.S. Environmental Protection Agency (EPA) retains the discretion to adopt, on a case-by-case basis, approaches that differ from this guidance.

Authors, Contributors, and Reviewers

This document was developed under the leadership of EPA's Council for Regulatory Environmental Modeling. A number of people representing EPA's core, program, and regional offices helped write and review it.

PRINCIPAL AUTHORS:

Council for Regulatory Environmental Modeling Staff:
Noha Gaber, Gary Foley, Pasky Pascual, Neil Stiber, Elsie Sunderland

EPA Region 10:
Ben Cope

Office of Environmental Information:
Annett Nold (deceased)

Office of Solid Waste and Emergency Response:
Zubair Saleem

CONTRIBUTORS AND INTERNAL REVIEWERS:

EPA Core Offices:
Office of Research and Development:
Justin Babendreier, Thomas Barnwell (retired), Ed Bender, Lawrence Burns (retired), Gary Foley, Kathryn Gallagher, Kenneth Galluppi, Gerry Laniak, Haluk Ozkaynak, Kenneth Schere, Subhas Sikdar, Eric Weber, Joe Williams

Office of Environmental Information:
Ming Chang, Reggie Cheatham, Evangeline Cummings, Linda Kirkland, Nancy Wentworth

Office of General Counsel:
James Nelson (retired), Barbara Pace, Quoc Nguyen, Manisha Patel, Carol Ann Sicilano

Science Advisory Board:
Jack Kooyoomjian

EPA Program Offices:
Office of Air and Radiation:
Tyler Fox, John Irwin (retired), Joe Tikvart, Richard (Chet) Wayland, Jason West

Office of Prevention, Pesticides and Toxic Substances:
Lynn Delpire, Alan Dixon, Wen-Hsiung Lee, David Miller, Vince Nabholz, Steve Nako, Neil Patel, Randolph Perfetti (retired), Scott Prothero, Donald Rodier

Office of Solid Waste and Emergency Response:
Peter Grevatt, Lee Hofmann, Stephen Kroner (retired), Larry Zaragoza

Office of Water:
Jim Carleton, Sharon E. Hayes, Marjorie Wellman, Denise Keehner, Lauren Wisniewski, Lisa McGuire, Mike Messner, James F. Pendergast

EPA Regional Offices:
Region 1:
Brian Hennessey, Michael Kenyon

Region 2:
Kevin Bricke, Rosella O'Connor, Richard Winfield

Region 3:
Alan Cimorelli

Region 4:
Nancy Bethune, Brenda Johnson, Tim Wool

Region 5:
Bertram Frey, Arthur Lubin, Randy Robinson, Stephen Roy, Mary White

Region 6:
James Yarborough

Region 7:
Bret Anderson

Region 10:
David Frank (retired), John Yearsley (retired)

Contents

Preface		ii
Disclaimer		ii
Authors, Contributors, and Reviewers		iii
Executive Summary		vii
1.	**INTRODUCTION**	
1.1	Purpose and Scope of This Document	1
1.2	Intended Audience	2
1.3	Organizational Framework	2
1.4	Appropriate Implementation of This Document	3
2.	**MODELING FOR ENVIRONMENTAL DECISION SUPPORT**	
2.1	Why Are Models Important?	4
2.2	The Modeling Life-Cycle	5
3.	**MODEL DEVELOPMENT**	
3.1	Introduction	8
3.2	Problem Specification and Conceptual Model Development	9
3.2.1	Define the Objectives	9
3.2.2	Determine the Type and Scope of Model Needed	9
3.2.3	Determine Data Criteria	9
3.2.4	Determine the Model's Domain of Applicability	10
3.2.5	Discuss Programmatic Constraints	10
3.2.6	Develop the Conceptual Model	10
3.3	Model Framework Selection and Development	11
3.3.1	Model Complexity	12
3.3.2	Model Coding and Verification	14
3.4	Application Tool Development	15
3.4.1	Input Data	16
3.4.2	Model Calibration	17
4.	**MODEL EVALUATION**	
4.1	Introduction	19
4.2	Best Practices for Model Evaluation	21
4.2.1	Scientific Peer Review	23
4.2.2	Quality Assurance Project Planning and Data Quality Assessment	25
4.2.3	Corroboration, Sensitivity Analysis, and Uncertainty Analysis	26
4.2.3.1	Types of Uncertainty	26
4.2.3.2	Model Corroboration	29
4.2.3.3	Sensitivity and Uncertainty Analysis	31
4.3	Evaluating Proprietary Models	31
4.4	Learning From Prior Experiences — Retrospective Analyses of Models	32
4.5	Documenting the Model Evaluation	33
4.6	Deciding Whether to Accept the Model for Use in Decision Making	34
5.	**MODEL APPLICATION**	
5.1	Introduction	35
5.2	Transparency	37
5.2.1	Documentation	37
5.2.2	Effective Communication	38
5.3	Application of Multiple Models	39
5.4	Model Post-Audit	39

APPENDICES

Appendix A: Glossary of Frequently Used Terms 41
Appendix B: Categories of Environmental Regulatory Models 49
Appendix C: Supplementary Material on Quality Assurance Planning and Protocols 56
Appendix D: Best Practices for Model Evaluation 60

Literature Cited 77

Executive Summary

In pursuing its mission to protect human health and to safeguard the natural environment, the U.S. Environmental Protection Agency often relies on environmental models. In this guidance, a model is defined as a "*simplification of reality that is constructed to gain insights into select attributes of a particular physical, biological, economic, or social system.*"

This guidance provides recommendations for the effective development, evaluation, and use of models in environmental decision making once an environmental issue has been identified. These recommendations are drawn from Agency white papers, EPA Science Advisory Board reports, the National Research Council's *Models in Environmental Regulatory Decision Making*, and peer-reviewed literature. For organizational simplicity, the recommendations are categorized into three sections: *model development*, *model evaluation*, and *model application*.

Model development can be viewed as a process with three main steps: (a) specify the environmental problem (or set of issues) the model is intended to address and develop the conceptual model, (b) evaluate or develop the model framework (develop the mathematical model), and (c) parameterize the model to develop the application tool.

Model evaluation is the process for generating information over the life cycle of the project that helps determine whether a model and its analytical results are of sufficient quality to serve as the basis for a decision. Model quality is an attribute that is meaningful only within the context of a specific model application. In simple terms, model evaluation provides information to help answer the following questions: (a) How have the principles of sound science been addressed during model development? (b) How is the choice of model supported by the quantity and quality of available data? (c) How closely does the model approximate the real system of interest? (d) How well does the model perform the specified task while meeting the objectives set by quality assurance project planning?

Model application (i.e., model-based decision making) is strengthened when the science underlying the model is transparent. The elements of transparency emphasized in this guidance are (a) comprehensive documentation of all aspects of a modeling project (suggested as a list of elements relevant to any modeling project) and (b) effective communication between modelers, analysts, and decision makers. This approach ensures that there is a clear rationale for using a model for a specific regulatory application.

This guidance recommends best practices to help determine when a model, despite its uncertainties, can be appropriately used to inform a decision. Specifically, it recommends that model developers and users: (a) subject their model to credible, objective peer review; (b) assess the quality of the data they use; (c) corroborate their model by evaluating the degree to which it corresponds to the system being modeled; and (d) perform sensitivity and uncertainty analyses. *Sensitivity analysis* evaluates the effect of changes in input values or assumptions on a model's results. *Uncertainty analysis* investigates the effects of lack of knowledge and other potential sources of error in the model (e.g., the "uncertainty" associated with model parameter values). When conducted in combination, sensitivity and uncertainty analysis allow model users to be more informed about the confidence that can be placed in model results. A model's quality to support a decision becomes better known when information is available to assess these factors.

4. Model Evaluation

Summary of Recommendations for Model Evaluation

appropriately used to inform a decision.

- Model evaluation addresses the soundness of the science underlying a model, the quality and quantity of available data, the degree of correspondence with observed conditions, and the appropriateness of a model for a given application.
- Recommended components of the evaluation process include: (a) credible, objective peer review; (b) QA project planning and data quality assessment; (c) qualitative and/or quantitative model corroboration; and (d) sensitivity and uncertainty analyses.
- Quality is an attribute of models that is meaningful only within the context of a specific model application. Determining whether a model serves its intended purpose involves in-depth discussions between model developers and the users responsible for applying for the model to a particular problem.
- Information gathered during model evaluation allows the decision maker to be better positioned to formulate decisions and policies that take into account all relevant issues and concerns.

4.1 Introduction

> *Models will always be constrained by computational limitations, assumptions and knowledge gaps. They can best be viewed as tools to help inform decisions rather than as machines to generate truth or make decisions. Scientific advances will never make it possible to build a perfect model that accounts for every aspect of reality or to prove that a given model is correct in all aspects for a particular regulatory application. These characteristics…suggest that model evaluation be viewed as an integral and ongoing part of the life cycle of a model, from problem formulation and model conceptualization to the development and application of a computational tool.*
>
> — *NRC Committee on Models in the Regulatory Decision Process (NRC 2007)*

The natural complexity of environmental systems makes it difficult to mathematically describe all relevant processes, including all the intrinsic mechanisms that govern their behavior. Thus, policy makers often rely on models as tools to approximate reality when making decisions that affect environmental systems. The challenge facing model developers and users is determining when a model, despite its uncertainties, can be appropriately used to inform a decision. Model evaluation is the process used to make this determination. In this guidance, model evaluation is defined as *the process used to generate information to determine whether a model and its analytical results are of a quality sufficient to serve as the basis for a decision.* Model evaluation is conducted over the life cycle of the project, from development through application.

Box 5: Model Evaluation Versus Validation Versus Verification

Model evaluation should not be confused with model validation. Different disciplines assign different meanings to these terms and they are often confused. For example, Suter (1993) found that among models used for risk assessments, misconception often arises in the form of the question "Is the model valid?" and statements such as "No model should be used unless it has been validated." Suter further points out that "validated" in this context means (a) proven to correspond exactly to reality or (b) demonstrated through experimental tests to make consistently accurate predictions.

Because every model contains simplifications, predictions derived from a model can never be completely accurate and a model can never correspond exactly to reality. In addition, "validated models" (e.g., those that have been shown to correspond to field data) do not necessarily generate accurate predictions of reality for multiple applications (Beck 2002a). Thus, some researchers assert that no model is ever truly "validated"; models can only be invalidated for a specific application (Oreskes et al. 1994). Accordingly, this guidance focuses on process and techniques for *model evaluation* rather than model validation or invalidation.

"Verification" is another term commonly applied to the evaluation process. However, in this guidance and elsewhere, model verification typically refers to model code verification as defined in the model development section. For example, the NRC Committee on Models in the Regulatory Decision Process (NRC 2007) provides the following definition:

> *Verification* refers to activities that are designed to confirm that the mathematical framework embodied in the module is correct and that the computer code for a module is operating according to its intended design so that the results obtained compare favorably with those obtained using known analytical solutions or numerical solutions from simulators based on similar or identical mathematical frameworks.

In simple terms, model evaluation provides information to help answer four main questions (Beck 2002b):

1. How have the principles of sound science been addressed during model development?
2. How is the choice of model supported by the quantity and quality of available data?
3. How closely does the model approximate the real system of interest?
4. How does the model perform the specified task while meeting the objectives set by QA project planning?

These four factors address two aspects of model quality. The first factor focuses on the intrinsic mechanisms and generic properties of a model, *regardless of the particular task to which it is applied*. In contrast, the latter three factors are evaluated in the context of the use of a model *within a specific set of conditions*. Hence, it follows that model quality is an attribute that is meaningful only within the context of a *specific model application*. A model's quality to support a decision becomes known when information is available to assess these factors.

The NRC committee recommends that evaluation of a regulatory model continue throughout the life of a model and that an evaluation plan could:

- Describe the model and its intended uses.
- Describe the relationship of the model to data, including the data for both inputs and corroboration.

- Describe how such data and other sources of information will be used to assess the ability of the model to meet its intended task.
- Describe all the elements of the evaluation plan by using an outline or diagram that shows how the elements relate to the model's life cycle.
- Describe the factors or events that might trigger the need for major model revisions or the circumstances that might prompt users to seek an alternative model. These can be fairly broad and qualitative.
- Identify the responsibilities, accountabilities, and resources needed to ensure implementation of the evaluation plan.

As stated above, the goal of model evaluation is to ensure model quality. At EPA, quality is defined by the Information Quality Guidelines (IQGs) (EPA 2002a). The IQGs apply to all information that EPA disseminates, including models, information from models, and input data (see Appendix C, Box C4: Definition of Quality). According to the IQGs, quality has three major components: integrity, utility, and objectivity. This chapter focuses on addressing the four questions listed above by evaluating the third component, objectivity — specifically, how to ensure the objectivity of information from models by considering their accuracy, bias, and reliability.

- Accuracy, as described in Section 2.4, is the closeness of a measured or computed value to its "true" value, where the "true" value is obtained with perfect information.
- Bias describes any systematic deviation between a measured (i.e., observed) or computed value and its "true" value. Bias is affected by faulty instrument calibration and other measurement errors, systematic errors during data collection, and sampling errors such as incomplete spatial randomization during the design of sampling programs.
- Reliability is the confidence that (potential) users have in a model and its outputs such that they are willing to use the model and accept its results (Sargent 2000). Specifically, reliability is a function of the model's performance record and its conformance to best available, practicable science.

This chapter describes principles, tools, and considerations for model evaluation throughout all stages of development and application. Section 4.2 presents a variety of qualitative and quantitative best practices for evaluating models. Section 4.3 discusses special considerations for evaluating proprietary models. Section 4.4 explains why retrospective analysis of models, conducted after a model has been applied, can be important to improve individual models and regulatory policies and to systematically enhance the overall modeling field. Finally, Section 4.5 describes how the evaluation process culminates in a decision whether to apply the model to decision making. Section 4.6 reviews the key recommendations from this chapter.

4.2 Best Practices for Model Evaluation

The four questions listed above address the soundness of the science underlying a model, the quality and quantity of available data, the degree of correspondence with observed conditions, and the appropriateness of a model for a given application. This guidance describes several "tools" or best practices to address these questions: peer review of models; QA project planning, including data quality assessment; model corroboration (qualitative and/or quantitative evaluation of a model's accuracy and predictive capabilities); and sensitivity and uncertainty analysis. These tools and practices include both qualitative and quantitative techniques:

- Qualitative assessments: Some of the uncertainty in model predictions may arise from sources whose uncertainty cannot be quantified. Examples are uncertainties about the theory underlying the model, the manner in which that theory is mathematically expressed to represent the environmental components, and the theory being modeled. Subjective evaluation of experts may be needed to determine appropriate values for model parameters and inputs that cannot be directly observed or measured (e.g., air emissions estimates). Qualitative assessments are needed for these sources of uncertainty. These assessments may involve expert elicitation regarding the system's behavior and comparison with model forecasts.
- Quantitative assessments: The uncertainty in some sources — such as some model parameters and some input data — can be estimated through quantitative assessments involving statistical uncertainty and sensitivity analyses. These types of analyses can also be used to quantitatively describe how model estimates of current conditions may be expected to differ from comparable field observations. However, since model predictions are not directly observed, special care is needed when quantitatively comparing model predictions with field data.

As discussed previously, model evaluation is an iterative process. Hence, these tools and techniques may be effectively applied throughout model development, testing, and application and should not be interpreted as sequential steps for model evaluation.

Model evaluation should always be conducted using a graded approach that is adequate and appropriate to the decision at hand (EPA 2001, 2002b). This approach recognizes that model evaluation can be modified to the circumstances of the problem at hand and that programmatic requirements are varied. For example, a screening model (a type of model designed to provide a "conservative" or risk-averse answer) that is used for risk management should undergo rigorous evaluation to avoid false negatives, while still not imposing unreasonable data-generation burdens (false positives) on the regulated community. Ideally, decision makers and modeling staff work together at the onset of new projects to identify the appropriate degree of model evaluation (see Section 3.1).

External circumstances can affect the rigor required in model evaluation. For example, when the likely result of modeling will be costly control strategies and associated controversy, more detailed model evaluation may be necessary. In these cases, many aspects of the modeling may come under close scrutiny, and the modeler must document the findings of the model evaluation process and be prepared to answer questions that will arise about the model. A deeper level of model evaluation may also be appropriate when modeling unique or extreme situations that have not been previously encountered.

Finally, as noted earlier, some assessments require the use of multiple, linked models. This linkage has implications for assessing uncertainty and applying the system of models. Each component model as well as the full system of integrated models must be evaluated.

Sections 4.2.1 and 4.2.2, on peer review of models and quality assurance protocols for input data, respectively, are drawn from existing guidance. Section 4.2.3, on model corroboration activities and the use of sensitivity and uncertainty analysis, provides new guidance for model evaluation (along with Appendix D).

Box 6: Examples of Life Cycle Model Evaluation

The value in evaluating a model from the conceptual stage through the use stage is illustrated in a multi-year project conducted by the Organization for Economic Cooperation and Development (OECD). The project sought to develop a screening model that could be used to assess the persistence and long-range transport potential of chemicals. To ensure its effectiveness, the screening model needed to be a consensus model that had been evaluated against a broad set of available models and data.

This project began at a 2001 workshop to set model performance and evaluation goals that would provide the foundation for subsequent model selection and development (OECD 2002). OECD then established an expert group in 2002. This group began its work by developing and publishing a guidance document on using multimedia models to estimate environmental persistence and long-range transport. From 2003 to 2004, the group compared and assessed the performance of nine available multimedia fate and transport models (Fenner et al. 2005; Klasmeier et al. 2006). The group then developed a parsimonious consensus model representing the minimum set of key components identified in the model comparison. They convened three international workshops to disseminate this consensus model and provide an ongoing model evaluation forum (Scheringer et al. 2006).

In this example, more than half the total effort was invested in the conceptual and model formulation stages, and much of the effort focused on performance evaluation. The group recognized that each model's life cycle is different, but noted that attention should be given to developing consensus-based approaches in the model concept and formulation stages. Conducting concurrent evaluations at these stages in this setting resulted in a high degree of buy-in from the various modeling groups.

4.2.1 Scientific Peer Review

Peer review provides the main mechanism for independent evaluation and review of environmental models used by the Agency. Peer review provides an independent, expert review of the evaluation in Section 4.1; therefore, its purpose is two-fold:

- To evaluate whether the assumptions, methods, and conclusions derived from environmental models are based on sound scientific principles.
- To check the scientific appropriateness of a model for informing a specific regulatory decision. (The latter objective is particularly important for secondary applications of existing models.)

Information from peer reviews is also helpful for choosing among multiple competing models for a specific regulatory application. Finally, peer review is useful to identify the limitations of existing models. Peer review is *not* a mechanism to comment on the *regulatory decisions* or policies that are informed by models (EPA 2000c).

Peer review charge questions and corresponding records for peer reviewers to answer those questions should be incorporated into the quality assurance project plan, developed during assessment planning (see Section 4.2.2, below). For example, peer reviews may focus on whether a model meets the objectives or specifications that were set as part of the quality assurance plan (see EPA 2002b) (see Section 3.1).

All models that inform *significant*[2] regulatory decisions are candidates for peer review (EPA 2000c, 1993) for several reasons:

- Model results will be used as a basis for major regulatory or policy/guidance decision making.
- These decisions likely involve significant investment of Agency resources.
- These decisions may have inter-Agency or cross-agency implications/applicability.

Existing guidance recommends that a new model should be scientifically peer-reviewed prior to its first application; for subsequent applications, the program manager should consider the scientific/technical complexity and/or the novelty of the particular circumstances to determine whether additional peer review is needed (EPA 1993). To conserve resources, peer review of "similar" applications should be avoided.

Models used for secondary applications (existing EPA models or proprietary models) will generally undergo a different type of evaluation than those developed with a specific regulatory information need in mind. Specifically, these reviews may deal more with uncertainty about the appropriate application of a model to a specific set of conditions than with the science underlying the model framework. For example, a project team decides to assess a water quality problem using WASP, a well-established water quality model framework. The project team determines that peer review of the model framework itself is not necessary, and the team instead conducts a peer review on their specific application of the WASP framework.

The following aspects of a model should be peer-reviewed to establish scientific credibility (SAB 1993a, EPA 1993):

- Appropriateness of input data.
- Appropriateness of boundary condition specifications.
- Documentation of inputs and assumptions.
- Applicability and appropriateness of selected parameter values.
- Documentation and justification for adjusting model inputs to improve model performance (calibration).
- Model application with respect to the range of its validity.
- Supporting empirical data that strengthen or contradict the conclusions that are based on model results.

To be most effective and maximize its value, external peer review should begin as early in the model *development* phase as possible (EPA 2000b). Because peer review involves significant time and resources, these allocations must be incorporated into components of the project planning and any

[2] Executive Order 12866 (58 FR 51735) requires federal agencies to determine whether a regulatory action is "significant" and therefore, subject to the requirements of the Executive Order, including review by the Office of Management and Budget. The Order defines "significant regulatory action" as one "that is likely to result in a rule that may: (1) Have an annual effect on the economy of $100 million or more or adversely affect in a material way the economy, a sector of the economy, productivity, competition, jobs, the environment, public health or safety, or State, local, or tribal governments or communities; (2) Create a serious inconsistency or otherwise interfere with an action taken or planned by another agency; (3) Materially alter the budgetary impacts of entitlements, grants, user fees, or loan programs or the rights and obligations of recipients thereof; or (4) Raise novel legal or policy issues arising out of legal mandates, the President's priorities, or the principles set forth in [the] Order." Section 2(f).

related contracts. Peer review in the early stages of model development can help evaluate the conceptual basis of models and potentially save time by redirecting misguided initiatives, identifying alternative approaches, or providing strong technical support for a potentially controversial position (SAB 1993a, EPA 1993). Peer review in the later stages of model development is useful as an independent external review of model code (i.e., model verification). External peer review of the *applicability* of a model to a particular set of conditions should be considered well in advance of any decision making, as it helps avoid inappropriate applications of a model for specific regulatory purposes (EPA 1993).

The peer review logistics are left to the discretion of the managers responsible for applying the model results to decision making. Mechanisms for accomplishing external peer review include (but are not limited to):

- Using an ad hoc panel of scientists.[3]
- Using an established external peer review mechanism such as the SAB
- Holding a technical workshop.[4]

Several sources provide guidance for determining the qualifications and number of reviewers needed for a given modeling project (SAB 1993a; EPA 2000c, 1993, 1994a). Key aspects are summarized in Appendix D of this guidance.

4.2.2 Quality Assurance Project Planning and Data Quality Assessment

Like peer review, data quality assessment addresses whether a model has been developed according to the principles of sound science. While some variability in data is unavoidable (see Section 4.2.3.1), adhering to the tenets of data quality assessment described in other Agency guidance[5] (Appendix D, Box D2: Quality Assurance Planning and Data Acceptance Criteria) helps minimize data uncertainty.

Well-executed QA project planning also helps ensure that a model performs the specified task, which addresses the fourth model evaluation question posed in Section 4.1. As discussed above, evaluating the degree to which a modeling project has met QA objectives is often a function of the external peer review process. The *Guidance for Quality Assurance Project Plans for Modeling* (EPA 2002b) provides general information about how to document quality assurance planning for modeling (e.g., specifications

---

[3] The formation and use of an ad hoc panel of peer reviewers may be subject to the Federal Advisory Committee Act (FACA). Compliance with FACA's requirements is summarized in Chapter Two of the *Peer Review Handbook,* "Planning a Peer Review" (EPA 2000c). Guidance on compliance with FACA may be sought from the Office of Cooperative Environmental Management. Legal questions regarding FACA may be addressed to the Cross-Cutting Issues Law Office in the Office of General Counsel.

[4] Note that a technical workshop held for peer review purposes is not subject to FACA *if the reviewers provide individual opinions.* [Note that there is no "one time meeting" exemption from FACA. The courts have held that even a single meeting can be subject to FACA.] An attempt to obtain group advice, whether it be consensus or majority-minority views, likely would trigger FACA requirements.

[5] Other guidance that can help ensure the quality of data used in modeling projects includes:

- *Guidance for the Data Quality Objectives Process,* a systematic planning process for environmental data collection (EPA 2000a).
- *Guidance on Choosing a Sampling Design for Environmental Data Collection,* on applying statistical sampling designs to environmental applications (EPA 2002c).
- *Guidance for Data Quality Assessment: Practical Methods for Data Analysis,* to evaluate the extent to which data can be used for a specific purpose (EPA 2000b).

or assessment criteria development, assessments of various stages of the modeling process; reports to management as feedback for corrective action; and finally the process for acceptance, rejection, or qualification of the output for use) to conform with EPA policy and acquisition regulations. Data quality assessments are a key component of the QA plan for models.

Both the quality and quantity (representativeness) of supporting data used to parameterize and (when available) corroborate models should be assessed during all relevant stages of a modeling project. Such assessments are needed to evaluate whether the available data are sufficient to support the choice of the model to be applied (question 2, Section 4.1), and to ensure that the data are sufficiently representative of the true system being modeled to provide meaningful comparison to observational data (question 3, Section 4.1).

4.2.3 Corroboration, Sensitivity Analysis, and Uncertainty Analysis

The question "How closely does the model approximate the real system of interest?" is unlikely to have a simple answer. In general, answering this question is not simply a matter of comparing model results and empirical data. As noted in Section 3.1, when developing and using an environmental model, modelers and decision makers should consider what degree of uncertainty is acceptable within the context of a specific model application. To do this, they will need to understand the uncertainties underlying the model. This section discusses three approaches to gaining this understanding:

- Model corroboration (Section 4.2.3.2), which includes all quantitative and qualitative methods for evaluating the degree to which a model corresponds to reality.
- Sensitivity analysis (Section 4.2.3.3), which involves studying how changes in a model's input values or assumptions affect its output or response.
- Uncertainty analysis (Section 4.2.3.3), which investigates how a model might be affected by the lack of knowledge about a certain population or the real value of model parameters.

Where practical, the recommended analyses should be conducted and their results reported in the documentation supporting the model. Section 4.2.3.1 describes and defines the various types of uncertainty, and associated concepts, inherent in the modeling process that model corroboration and sensitivity and uncertainty analysis can help assess.

4.2.3.1 Types of Uncertainty

Uncertainties are inherent in all aspects of the modeling process. Identifying those uncertainties that *significantly* influence model outcomes (either qualitatively or quantitatively) and communicating their importance is key to successfully integrating information from models into the decision making process. As defined in Chapter 3, uncertainty is the term used in this guidance to describe incomplete knowledge about specific factors, parameters (inputs), or models. For organizational simplicity, uncertainties that affect model quality are categorized in this guidance as:

- **Model framework uncertainty,** resulting from incomplete knowledge about factors that control the behavior of the system being modeled; limitations in spatial or temporal resolution; and simplifications of the system.

- **Model input uncertainty,** resulting from data measurement errors, inconsistencies between measured values and those used by the model (e.g., in their level of aggregation/averaging), and parameter value uncertainty.
- **Model niche uncertainty,** resulting from the use of a model outside the system for which it was originally developed and/or developing a larger model from several existing models with different spatial or temporal scales.

Box 7: Example of Model Input Uncertainty

The NRC's *Models in Environmental Regulatory Decision Making* provides a detailed example, summarized below, of the effect of model input uncertainty on policy decisions.

The formation of ozone in the lower atmosphere (troposphere) is an exceedingly complex chemical process that involves the interaction of oxides of nitrogen (NO_x), volatile organic compounds (VOCs), sunlight, and dynamic atmospheric processes. The basic chemistry of ozone formation was known in the early 1960s (Leighton 1961). Reduction of ozone concentrations generally requires controlling either or both NO_x and VOC emissions. Due to the nonlinearity of atmospheric chemistry, selection of the emission-control strategy traditionally relied on air quality models.

One of the first attempts to include the complexity of atmospheric ozone chemistry in the decision making process was a simple observation-based model, the so-called Appendix J curve (36 Fed. Reg. 8166 [1971]). The curve was used to indicate the percentage VOC emission reduction required to attain the ozone standard in an urban area based on peak concentration of photochemical oxidants observed in that area. Reliable NO_x data were virtually nonexistent at the time; Appendix J was based on data from measurements of ozone and VOC concentrations from six U.S. cities. The Appendix J curve was based on the hypothesis that reducing VOC emissions was the most effective emission-control path, and this conceptual model helped define legislative mandates enacted by Congress that emphasized controlling these emissions.

The choice in the 1970s to concentrate on VOC controls was supported by early results from models. Though new results in the 1980s showed higher-than-expected biogenic VOC emissions, EPA continued to emphasize VOC controls, in part because the schedule that Congress and EPA set for attaining the ozone ambient air quality standards was not conducive to reflecting on the basic elements of the science (Dennis 2002).

VOC reductions from the early 1970s to the early 1990s had little effect on ozone concentrations. Regional ozone models developed in the 1980s and 1990s suggested that controlling NO_x emissions was necessary in addition to, or instead of, controlling VOCs to reduce ozone concentrations (NRC 1991). The shift in the 1990s toward regulatory activities focusing on NO_x controls was partly due to the realization that historical estimates of emissions and the effectiveness of various control strategies in reducing emissions were not accurate. In other words, ozone concentrations had not been reduced as much as hoped over the past three decades, in part because emissions of some pollutants were much higher than originally estimated.

Regulations may go forward before science and models are perfected because of the desire to mitigate the potential harm from environmental hazards. In the case of ozone modeling, the model inputs (emissions inventories in this case) are often more important than the model science (description of atmospheric transport and chemistry in this case) and require as careful an evaluation as the evaluation of the model. These factors point to the potential synergistic role that measurements play in model development and application.

In reality, all three categories are interrelated. Uncertainty in the underlying model structure or model framework uncertainty is the result of incomplete scientific data or lack of knowledge about the factors

that control the behavior of the system being modeled. Model framework uncertainty can also be the result of simplifications needed to translate the conceptual model into mathematical terms as described in Section 3.3. In the scientific literature, this type of uncertainty is also referred to as structural error (Beck 1987), conceptual errors (Konikow and Bredehoeft 1992), uncertainties in the conceptual model (Usunoff et al. 1992), or model error/uncertainty (EPA 1997; Luis and McLaughlin 1992). Structural error relates to the mathematical construction of the algorithms that make up a model, while the conceptual model refers to the science underlying a model's governing equations. The terms "model error" and "model uncertainty" are both generally synonymous with model framework uncertainty.

Many models are developed iteratively to update their underlying science and resolve existing model framework uncertainty as new information becomes available. Models with long lives may undergo important changes from version to version. The MOBILE model for estimating atmospheric vehicle emissions, the CMAQ (Community Multi-scale Air Quality) model, and the QUAL2 water quality models are examples of models that have had multiple versions and major scientific modifications and extensions in over two decades of their existence (Scheffe and Morris 1993; Barnwell et al. 2004; EPA 1999c, as cited in NRC 2007).

When an appropriate model framework has been developed, the model itself may still be highly uncertain if the input data or database used to construct the application tool is not of sufficient quality. The quality of empirical data used for both model parameterization and corroboration tests is affected by both uncertainty and variability. This guidance uses the term "data uncertainty" to refer to the uncertainty caused by measurement errors, analytical imprecision, and limited sample sizes during data collection and treatment.

In contrast to data uncertainty, variability results from the inherent randomness of certain parameters, which in turn results from the heterogeneity and diversity in environmental processes. Examples of variability include fluctuations in ecological conditions, differences in habitat, and genetic variances among populations (EPA 1997). Variability in model parameters is largely dependent on the extent to which input data have been aggregated (both spatially and temporally). Data uncertainty is sometimes referred to as <u>reducible uncertainty</u> because it can be minimized with further study (EPA 1997). Accordingly, variability is referred to as irreducible because it can be better characterized and represented but not reduced with further study (EPA 1997).

A model's <u>application niche</u> is the set of conditions under which use of the model is scientifically defensible (EPA 1994b). <u>Application niche uncertainty</u> is therefore a function of the appropriateness of a model for use under a specific set of conditions. Application niche uncertainty is particularly important when (a) choosing among existing models for an application that lies outside the system for which the models were originally developed and/or (b) developing a larger model from several existing models with different spatial or temporal scales (Levins 1992).

The SAB's review of MMSOILS (Multimedia Contaminant Fate, Transport and Exposure Model) provides a good example of application niche uncertainty. The SAB questioned the adequacy of using a screening-level model to characterize situations where there is substantial subsurface heterogeneity or where non-aqueous phase contaminants are present (conditions differ from default values) (SAB 1993b). The SAB considered the MMSOILS model acceptable within its original application niche, but unsuitable for more heterogeneous conditions.

4.2.3.2 Model Corroboration

> *The interdependence of models and measurements is complex and iterative for several reasons. Measurements help to provide the conceptual basis of a model and inform model development, including parameter estimation. Measurements are also a critical tool for corroborating model results. Once developed, models can derive priorities for measurements that ultimately get used in modifying existing models or in developing new ones. Measurement and model activities are often conducted in isolation…Although environmental data systems serve a range of purposes, including compliance assessment, monitoring of trends in indicators, and basic research performance, the importance of models in the regulatory process requires measurements and models to be better integrated. Adaptive strategies that rely on iterations of measurements and modeling, such as those discussed in the 2003 NRC report titled* Adaptive Monitoring and Assessment for the Comprehensive Everglades Restoration Plan, *provide examples of how improved coordination might be achieved.*
>
> *— NRC Committee on Models in the Regulatory Decision Process (NRC 2007)*

Model corroboration includes all quantitative and qualitative methods for evaluating the degree to which a model corresponds to reality. The rigor of these methods varies depending on the type and purpose of the model application. Quantitative model corroboration uses statistics to estimate how closely the model results match measurements made in the real system. Qualitative corroboration activities may include expert elicitation to obtain beliefs about a system's behavior in a data-poor situation. These corroboration activities may move model forecasts toward consensus.

For newly developed model frameworks or untested mathematical processes, formal corroboration procedures may be appropriate. Formal corroboration may involve formulation of hypothesis tests for model acceptance, tests on datasets independent of the calibration dataset, and quantitative testing criteria. In many cases, collecting independent datasets for formal model corroboration is extremely costly or otherwise unfeasible. In such circumstances, model evaluation may be appropriately conducted using a combination of other evaluation tools discussed in this section.

Robustness is the capacity of a model to perform equally well across the full range of environmental conditions for which it was designed (Reckhow 1994; Borsuk et al. 2002). The degree of similarity among datasets available for calibration and corroboration provides insight into a model's robustness. For example, if the dataset used to corroborate a model is identical or statistically similar to the dataset used to calibrate the model, then the corroboration exercise has provided neither an independent measure of the model's performance nor insight into the model's robustness. Conversely, when corroboration data are significantly different from calibration data, the corroboration exercise provides a measure of both model performance and robustness.

Quantitative model corroboration methods are recommended for choosing among multiple models that are available for the same application. In such cases, models may be ranked on the basis of their statistical performance in comparison to the observational data (e.g., EPA 1992). EPA's Office of Air and Radiation evaluates models in this manner. When a single model is found to perform better than others in a given category, OAR recommends it in the *Guidelines on Air Quality Models* as a preferred model for

application in that category (EPA 2003a). If models perform similarly, then the preferred model is selected based on other factors, such as past use, public familiarity, cost or resource requirements, and availability.

Box 8: Example: Comparing Results from Models of Varying Complexity

(From Box 5-4 in NRC's *Models in Environmental Regulatory Decision Making*)

The Clean Air Mercury Rule[6] requires industry to reduce mercury emissions from coal-fired power plants. A potential benefit is the reduced human exposure and related health impacts from methylmercury that may result from reduced concentrations of this toxin in fish. Many challenges and uncertainties affect assessment of this benefit. In its assessment of the benefits and costs of this rule, EPA used multiple models to examine how changes in atmospheric deposition would affect mercury concentrations in fish, and applied the models to assess some of the uncertainties associated with the model results (EPA 2005).

EPA based its national-scale benefits assessment on results from the mercury maps (MMaps) model. This model assumes a linear, steady-state relationship between atmospheric deposition of mercury and mercury concentrations in fish, and thus assumes that a 50% reduction in mercury deposition rates results in a 50% decrease in fish mercury concentrations. In addition, MMaps assumes instantaneous adjustment of aquatic systems and their ecosystems to changes in deposition — that is, no time lag in the conversion of mercury to methylmercury and its bioaccumulation in fish. MMaps also does not deal with sources of mercury other than those from atmospheric deposition. Despite those limitations, the Agency concluded that no other available model was capable of performing a national-scale assessment.

To further investigate fish mercury concentrations and to assess the effects of MMaps' assumptions, EPA applied more detailed models, including the spreadsheet-based ecological risk assessment for the fate of mercury (SERAFM) model, to five well-characterized ecosystems. Unlike the steady-state MMaps model, SERAFM is a dynamic model which calculates the temporal response of mercury concentrations in fish tissues to changes in mercury loading. It includes multiple land-use types for representing watershed loadings of mercury through soil erosion and runoff. SERAFM partitions mercury among multiple compartments and phases, including aqueous phase, abiotic participles (for example, silts), and biotic particles (for example, phytoplankton). Comparisons of SERAFM's predictions with observed fish mercury concentrations for a single fish species in four ecosystems showed that the model under-predicted mean concentrations for one water body, over-predicted mean concentrations for a second water body, and accurately predicted mean concentrations for the other two. The error bars for the observed fish mercury concentrations in these four ecosystems were large, making it difficult to assess the models' accuracy. Modeling the four ecosystems also showed how the assumed physical and chemical characteristics of the specific ecosystem affected absolute fish mercury concentrations and the length of time before fish mercury concentrations reached steady state.

Although EPA concluded that the best available science supports the assumption of a linear relationship between atmospheric deposition and fish mercury concentrations for broad-scale use, the more detailed ecosystem modeling demonstrated that individual ecosystems were highly sensitive to uncertainties in model parameters. The Agency also noted that many of the model uncertainties could not be quantified. Although the case studies covered the bulk of the key environmental characteristics, EPA found that extrapolating the individual ecosystem case studies to account for the variability in ecosystems across the country indicated that those case studies might not represent extreme conditions that could influence how atmospheric mercury deposition affected fish mercury concentrations in

[6] On February 8, 2008, the U.S. Court of Appeals for the District of Columbia Circuit vacated the Clean Air Mercury Rule. The DC Circuit's vacatur of this rule was unrelated to the modeling conducted in support of the rule.

a water body.

This example illustrates the usefulness of investigating a variety of models at varying levels of complexity. A hierarchical modeling approach, such as that used in the mercury analysis, can provide justification for simplified model assumptions or potentially provide evidence for a consistent bias that would negate the assumption that a simple model is appropriate for broad-scale application.

4.2.3.3 Sensitivity and Uncertainty Analysis

Sensitivity analysis is the study of how a model's response can be apportioned to changes in model inputs (Saltelli et al. 2000a). Sensitivity analysis is recommended as the principal evaluation tool for characterizing the most and least important sources of uncertainty in environmental models.

Uncertainty analysis investigates the lack of knowledge about a certain population or the real value of model parameters. Uncertainty can sometimes be reduced through further study and by collecting additional data. EPA guidance (e.g., EPA 1997) distinguishes uncertainty analysis from methods used to account for variability in input data and model parameters. As mentioned earlier, variability in model parameters and input data can be better characterized through further study but is usually not reducible (EPA 1997).

Although sensitivity and uncertainty analysis are closely related, sensitivity is algorithm-specific with respect to model "variables" and uncertainty is parameter-specific. Sensitivity analysis assesses the "sensitivity" of the model to specific parameters and uncertainty analysis assesses the "uncertainty" associated with parameter values. Both types of analyses are important to understand the degree of confidence a user can place in the model results. Recommended techniques for conducting uncertainty and sensitivity analysis are discussed in Appendix D.

The NRC committee pointed out that uncertainty analysis for regulatory environmental modeling involves not only analyzing uncertainty, but also communicating the uncertainties to policy makers. To facilitate communication of model uncertainty, the committee recommends using hybrid approaches in which unknown quantities are treated probabilistically *and* explored in scenario-assessment mode by decision makers through a range of plausible values. The committee further acknowledges (NRC 2007) that:

> *Effective uncertainty communication requires a high level of interaction with the relevant decision makers to ensure that they have the necessary information about the nature and sources of uncertainty and their consequences. Thus, performing uncertainty analysis for environmental regulatory activities requires extensive discussion between analysts and decision makers.*

4.3 Evaluating Proprietary Models

This guidance defines proprietary models as those computer models for which the source code is not universally shared. To promote the transparency with which decisions are made, EPA prefers using non-proprietary models when available. However, the Agency acknowledges there will be times when the use of proprietary models provides the most reliable and best-accepted characterization of a system.

When a proprietary model is used, its use should be accompanied by comprehensive, publicly available documentation. This documentation should describe:

- The conceptual model and the theoretical basis (as described in Section 3.3.1) for the model.
- The techniques and procedures used to verify that the proprietary model is free from numerical problems or "bugs" and that it truly represents the conceptual model (as described in Section 3.3.3).
- The process used to evaluate the model (as described in Section 4.2) and the basis for concluding that the model and its analytical results are of a quality sufficient to serve as the basis for a decision (as described in Section 4.1).
- To the extent practicable, access to input and output data such that third parties can replicate the model results.

4.4 Learning From Prior Experiences — Retrospective Analyses of Models

The NRC Committee on Models in the Regulatory Decision Process emphasized that the final issue in managing the model evaluation process is the learning that comes from examining prior modeling experiences. Retrospective analysis of models is important to individual models and regulatory policies and to systematically enhance the overall modeling field. The committee pointed out that retrospective analyses can be considered from various perspectives:

- They can investigate the systematic strengths and weaknesses that are characteristic of broad classes of models — for example, models of ground water flow, surface water, air pollution, and health risks assessment. For example, a researcher estimated that in 20 to 30 percent of ground water modeling efforts, surprising occurrences indicated that the conceptual model underlying the computer model was invalid (Bredehoeft 2003, 2005, in NRC 2007).

- They can study the processes (for example, approaches to model development and evaluation) that lead to successful model applications.

- They can examine models that have been in use for years to determine how well they work. Ongoing evaluation of the model against data, especially data taken under novel conditions, offers the best chance to identify and correct conceptual errors. This type of analysis is referred to as a model "post-audit" (see Section 5.5)

The results of retrospective evaluations of individual models and model classes can be used to identify priorities for improving models.

Box 9: Example of a Retrospective Model Analysis at EPA
(From Box 4-6 in NRC's *Models in Environmental Regulatory Decision Making*)

EPA's Model Evaluation and Applications Research Branch has been performing a retrospective analysis of the CMAQ model's ability to simulate the change in a pollutant associated with a known change in emissions (A. Gilliland, EPA, personal commun., May 19, 2006 and March 5, 2007). This study, which EPA terms a "dynamic evaluation" study, focuses on a rule issue by EPA in 1998 that required 22 states and the District of Columbia to submit State Implementation Plans providing NO_x emission reductions to mitigate ozone transport in the eastern United States. This rule, known as the NO_x SIP Call, requires emission reductions from the utility sector and large industrial boilers in the eastern and midwestern United States by 2004. Since theses sources are equipped with continuous emission monitoring systems, the NO_x SIP call represents a special opportunity to directly measure the emission changes and incorporate them into model simulations with reasonable confidence.

Air quality model simulations were developed for the summers of 2002 and 2004 using the CMAQ model, and the resulting ozone predictions were compared to observed ozone concentrations. Two series of CMAQ simulations were developed to test two different chemical mechanisms in CMAQ. This allowed an evaluation of the uncertainty associated with the model's representation of chemistry. Since the model's prediction of the relative change in pollutant concentrations provides input for regulatory decision making, this type of dynamic evaluations is particularly relevant to how the model is used.

4.5 Documenting the Model Evaluation

In its *Models in Environmental Regulatory Decision Making* report, the NRC summarizes the key elements of a model evaluation (NRC 2007). This list provides a useful framework for documenting the results of model evaluation as the various elements are conducted during model development and application:

- **Scientific basis.** The scientific theories that form the basis for models.
- **Computational infrastructure.** The mathematical algorithms and approaches used in executing the model computations.
- **Assumptions and limitations.** The detailing of important assumptions used in developing or applying a computational model, as well as the resulting limitations that will affect the model's applicability.
- **Peer review.** The documented critical review of a model or its application conducted by qualified individuals who are independent of those who performed the work, but who collectively have at least equivalent technical expertise to those who performed the original work. Peer review attempts to ensure that the model is technically adequate, competently performed, properly documented, and satisfies established quality requirements through the review of assumptions, calculations, extrapolations, alternate interpretations, methodology, acceptance criteria, and/or conclusions pertaining from a model or its application (modified from EPA 2006).
- **Quality assurance and quality control (QA/QC).** A system of management activities involving planning, implementation, documentation, assessment, reporting, and improvement to ensure that a model and its components are of the type needed and expected for its task and that they meet all required performance standards.
- **Data availability and quality.** The availability and quality of monitoring and laboratory data that can be used for both developing model input parameters and assessing model results.

- **Test cases.** Basic model runs where an analytical solution is available or an empirical solution is known with a high degree of confidence to ensure that algorithms and computational processes are implemented correctly.
- **Corroboration of model results with observations.** Comparison of model results with data collected in the field or laboratory to assess the model's accuracy and improve its performance.
- **Benchmarking against other models.** Comparison of model results with other similar models.
- **Sensitivity and uncertainty analysis.** Investigation of the parameters or processes that drive model results, as well as the effects of lack of knowledge and other potential sources of error in the model.
- **Model resolution capabilities.** The level of disaggregation of processes and results in the model compared to the resolution needs from the problem statement or model application. The resolution includes the level of spatial, temporal, demographic, or other types of disaggregation.
- **Transparency.** The need for individuals and groups outside modeling activities to comprehend either the processes followed in evaluation or the essential workings of the model and its outputs.

4.6 Deciding Whether to Accept the Model for Use in Decision Making

The model development and evaluation process culminates in a decision to accept (or not accept) the model for use in decision making. This decision is made by the program manager charged with making regulatory decisions, in consultation with the model developers and project team. It should be informed by good communication of the key findings of the model evaluation process, including the critical issue of uncertainty. The project team should gain model acceptance before applying the model to decision making to avoid confusion and potential re-work.

5. Model Application

5.1 Introduction

Once a model has been accepted for use by decision makers, it is applied to the problem that was identified in the first stages of the modeling process. Model application commonly involves a shift from the *hindcasting* (testing the model against past observed conditions) used in the model development and evaluation phases to *forecasting* (predicting a future change) in the application phase. This may involve a collaborative effort between modelers and program staff to devise management scenarios that represent different regulatory alternatives. Some model applications may entail trial-and-error model simulations, where model inputs are changed iteratively until a desired environmental condition is achieved.

Using a model in a proposed decision requires that the model application be transparently incorporated into the public process. This is accomplished by providing written documentation of the model's relevant characteristics in a style and format accessible to the interested public, and by sharing specific model files and data with external parties, such as technical consultants and university scientists, upon request. This chapter presents best practices and other recommendations for integrating the results of environmental models into Agency decisions. Section 5.2 describes how to achieve and document a transparent modeling process, Section 5.3 reviews situations when use of multiple models may be appropriate, and Section 5.4 discusses the use of post-audits to determine whether the actual system response concurs with that predicted by the model.

Box 10: Examples of Major EPA Documents That Incorporate a Substantial Amount of Computational Modeling Activities

(From Table 2-2 in NRC's *Models in Environmental Regulatory Decision Making*)

Air Quality

Criteria Documents and Staff Paper for Establishing NAAQS

Summarize and assess exposures and health impacts for the criteria air pollutants (ozone, particulate matter, carbon monoxide, lead, nitrogen dioxide, and sulfur dioxide). Criteria documents include results from exposure and health modeling studies, focusing on describing exposure-response relationships. For example, the particulate matter criteria document placed emphasis on epidemiological models of morbidity and mortality (EPA 2004c). The Staff Paper takes this scientific foundation a step further by identifying the crucial health information and using exposure modeling to characterize risks that serve as the basis for the staff recommendation of the standards to the EPA Administrator. For example, models of the number of children exercising outdoors during those parts of the day when ozone is elevated had a major influence on decisions about the 8-hour ozone national ambient air quality standard (EPA 1996).

State Implementation Plan (SIP) Amendments

A detailed description of the scientific methods and emissions reduction programs a state will use to carry out its responsibilities under the CAA for complying with NAAQS. A SIP typically relies on results from activity, emissions, and air quality modeling. Model-generated emissions inventories serve as input to regional air quality models and are used to test alternative emission-reduction schemes to see whether they will result in air quality standards being met (e.g., ADEC 2001; TCEQ 2004). Regional-scale modeling has become part of developing state implementation plans

for the new 8-hour ozone and fine particulate matter standards. States, local governments, and their consultants do this analysis.

Regulatory Impact Assessments (RIAs) for Air Quality Rules

RIAs for air quality regulations document the costs and benefits of major emission control regulations. Recent RIAs have included emissions, air quality, exposure, and health and economic impacts modeling results (e.g., EPA 2004b)

Water Regulations

Total Maximum Daily Load (TMDL) Determinations

For each impaired water body, a TMDL identifies (a) the water quality standard that is not being attained and the pollutant causing the impairment (b) and the total loading of the pollutant that the water may receive and still meet the water quality standard and (c) allocates that total loading among the point and nonpoint sources of the pollutant discharging to the water. Establishment of TMDLs may utilize water quality and/or nutrient loading models. States establish most TMDLs and therefore state and their consultants can be expected to do the majority of this modeling, with EPA occasionally doing the modeling for particularly contentious TMDLs (EPA 2002b; George 2004; Shoemaker 2004; Wool 2004).

Leaking Underground Storage Tank Program

Assesses the potential risks associated with leaking underground gasoline storage tanks. At an initial screening level, it may assess one-dimensional transport of a conservative contaminant using an analytical model (Weaver 2004).

Development of Maximum Contaminant Levels for Drinking Water

Assess drinking water standards for public water supply systems. Such assessments can include exposure, epidemiology, and dose-response modeling (EPA 2002c; NRC 2001b, 2005b).

Pesticides and Toxic Substances Program

Pre-manufacturing Notice Decisions

Assess risks associated with new manufactured chemicals entering the market. Most chemicals are screened initially as to their environmental and human health risks using structure-activity relationship models.

Pesticide Reassessments

Requires that all existing pesticides undergo a reassessment based on cumulative (from multiple pesticides) and aggregate (exposure from multiple pathways) health risk. This includes the use of pesticide exposure models.

Solid and Hazardous Wastes Regulations

Superfund Site Decision Documents

Includes the remedial investigation, feasibility study, proposed plan, and record-of-decision documents that address the characteristics and cleanup of Superfund sites. For many hazardous waste sites, a primary modeling task is using groundwater modeling to assess movement of toxic substances through the substrate (Burden 2004). The remedial investigation for a mining megasite might include water quality, environmental chemistry, human health risk, and ecological risk assessment modeling (NRC 2005a).

Human Health Risk Assessment

Benchmark Dose (BMD) Technical Guidance Document

EPA relies on both laboratory animal and epidemiological studies to assess the noncancer effects of chronic exposure to pollutants (that is, the reference dose [RfD] and the inhalation reference concentration, [RfC]). These data are modeled to estimate the human dose-response. EPA recommends the use of BMD modeling, which essentially fits the experimental data to use as much of the available data as possible (EPA 2000).

Ecological Risk Assessment

The ecological risk assessment guidelines provide general principles and give examples to show how ecological risk assessment can be applied to a wide range of systems, stressors, and biological, spatial, and temporal scales. They describe the strengths and limitations of alternative approaches and emphasize processes and approaches for analyzing data rather than specifying data collection techniques, methods or models (EPA 1998).

5.2 Transparency

The objective of transparency is to enable communication between modelers, decision makers, and the public. Model transparency is achieved when the modeling processes are documented with clarity and completeness at an appropriate level of detail. When models are transparent, they can be used reasonably and effectively in a regulatory decision.

5.2.1 Documentation

Documentation enables decision makers and other model users to understand the process by which a model was developed and used. During model development and use, many choices must be made and options selected that may bias the model results. Documenting this process and its limitations and uncertainties is essential to increase the utility and acceptability of the model outcomes. Modelers and project teams should document all relevant information about the model to the extent practicable, particularly when a controversial decision is involved. In legal proceedings, the quality and thoroughness of the model's written documentation and the Agency's responses to peer review and public comments on the model can affect the outcome of the legal challenge.

The documentation should include a clear explanation of the model's relationship to the scenario of the particular application. This explanation should describe the limitations of the available information when applied to other scenarios. Disclosure about the state of science used in a model and future plans to update the model can help establish a record of reasoned, evidence-based application to inform decisions. For example, EPA successfully defended a challenge to a model used in its TMDL program when it explained that it was basing its decision on the best available scientific information and that it intended to refine its model as better information surfaced.[7]

When a court reviews EPA modeling decisions, they generally give some deference to EPA's technical expertise, unless it is without substantial basis in fact. As discussed in Section 4.2.3 regarding corroboration, deviations from empirical observations are to be expected. In substantive legal disputes, the courts generally examine the record supporting EPA's decisions for justification as to why the model was reasonable.[8] The record should contain not only model development, evaluation, and application but also the Agency's responses to comments on the model raised during peer review and the public process. The organization of this guidance document offers a general outline for model documentation. Box 11 provides a more detailed outline. These elements are adapted from EPA Region 10's standard practices for modeling projects.

[7] *Natural Resources Defense Council v. Muszynski*, 268 F.3d 91 (2d Cir. 2001).
[8] *American Iron and Steel Inst. v. EPA*, 115 F.3d 979 (D.C. Cir. 1997).

Box 11: Recommended Elements for Model Documentation

1. Management Objectives
- Scope of problem
- Technical objectives that result from management objectives
- Level of analysis needed
- Level of confidence needed

2. Conceptual Model
- System boundaries (spatial and temporal domain)
- Important time and length scales
- Key processes
- System characteristics
- Source description
- Available data sources (quality and quantity)
- Data gaps
- Data collection programs (quality and quantity)
- Mathematical model
- Important assumptions

3. Choice of Technical Approach
- Rationale for approach in context of management objectives and conceptual model
- Reliability and acceptability of approach
- Important assumptions

4. Parameter Estimation
- Data used for parameter estimation
- Rationale for estimates in the absence of data
- Reliability of parameter estimates

5. Uncertainty/Error
- Error/uncertainty in inputs, initial conditions, and boundary conditions
- Error/uncertainty in pollutant loadings
- Error/uncertainty in specification of environment
- Structural errors in methodology (e.g., effects of aggregation or simplification)

6. Results
- Tables of all parameter values used for analysis
- Tables or graphs of all results used in support of management objectives or conclusions
- Accuracy of results

7. Conclusions of analysis in relationship to management objectives

8. Recommendations for additional analysis, if necessary

Note: The QA project plan for models (EPA 2002b) *includes a documentation and records component that also describes the types of records and level of detailed documentation to be kept depending on the scope and magnitude of the project.*

5.2.2 Effective Communication

The modeling process should effectively communicate uncertainty to anyone interested in the model results. All technical information should be documented in a manner that decision makers and stakeholders can readily interpret and understand. Recommendations for improving clarity, adapted from the Risk Characterization Handbook (EPA 2000d), include the following:

- Be as brief as possible while still providing all necessary details.

- Use plain language that modelers, policy makers, and the informed lay person can understand.
- Avoid jargon and excessively technical language. Define specialized terms upon first use.
- Provide the model equations.
- Use clear and appropriate methods to efficiently display mathematical relationships.
- Describe quantitative outputs clearly.
- Use understandable tables and graphics to present technical data (see Morgan and Henrion, 1990, for suggestions).

The conclusions and other key points of the modeling project should be clearly communicated. The challenge is to characterize these essentials for decision makers, while also providing them with more detailed information about the modeling process and its limitations. Decision makers should have sufficient insight into the model framework and its underlying assumptions to be able to apply model results appropriately. This is consistent with QA planning practices that assert that all technical reports must discuss the data quality and any limitations with respect to their intended use (EPA 2000e).

5.3 Application of Multiple Models

As mentioned in earlier chapters, multiple models sometimes apply to a certain decision making need; for example, several air quality models, each with its own strengths and weaknesses, might be applied for regulatory purposes. In other situations, stakeholders may use alternative models (developed by industry and academic researchers) to produce alternative risk assessments (e.g., CARES pesticide exposure model developed by industry). One approach to address this issue is to use multiple models of varying complexities to simulate the same phenomena (NRC 2007). This may provide insight into how sensitive the results are to different modeling choices and how much trust to put in the results from any one model. Experience has shown that running multiple models can increase confidence in the model results (Manno et al. 2008) (see Box 8 in Chapter 4 for an example). However, resource limitations or regulatory time constraints may limit the capacity to fully evaluate all possible models.

5.4 Model Post-Audit

Due to time complexity, constraints, scarcity of resources, and/or lack of scientific understanding, technical decisions are often based on incomplete information and imperfect models. Further, even if model developers strive to use the best science available, scientific knowledge and understanding are continually advancing. Given this reality, decision makers should use model results in the context of an iterative, ever-improving process of continuous model refinement to demonstrate the accountability of model-based decisions. This process includes conducting model post-audits to assess and improve a model and its ability to provide valuable predictions for management decisions. Whereas corroboration (discussed in Section 4.2.3.2) demonstrates the degree to which a model corresponds to past system behavior, a model post-audit assesses its ability to model future conditions (Anderson and Woessner 1992).

A model post-audit involves monitoring the modeled system, after implementing a remedial or management action, to determine whether the actual system response concurs with that predicted by the model. Post-auditing of all models is not feasible due to resource constraints, but targeted audits of commonly used models may provide valuable information for improving model frameworks and/or model parameter estimates. In its review of the TMDL program, the NRC recommended that EPA implement

this approach by selectively targeting “some post-implementation TMDL compliance monitoring for verification data collection to assess model prediction error” (NRC 2001). The post-audit should also evaluate how effectively the model development and use process engaged decision makers and other stakeholders (Manno et al. 2008).

Appendix D: Best Practices for Model Evaluation

D.1 Introduction

This appendix presents a practical guide to the best practices for model evaluation (please see Section 4.1 for descriptions of these practices). These best practices are:

- Scientific peer review (Section 4.1.1)
- Quality assurance project planning (Section 4.1.2)
- Corroboration (Section 4.1.3)
- Sensitivity analysis (Section 4.1.3)
- Uncertainty analysis (Section 4.1.3)

The objective of model evaluation is to determine whether a model is of sufficient quality to inform a regulatory decision. For each of these best practices, this appendix provides a conceptual overview for model evaluation and introduces a suite of "tools" that can be used in partial fulfillment of the best practice. The appropriate use of these tools is discussed and citations to primary references are provided. Users are encouraged to obtain more complete information about tools of interest, including their theoretical basis, details of their computational methods, and the availability of software.

Figure D.1.1 provides an overview of the steps in the modeling process that are discussed in this guidance. Items in bold in the figure, including peer review, model corroboration, uncertainty analysis, and sensitivity analysis, are discussed in this section on model evaluation.

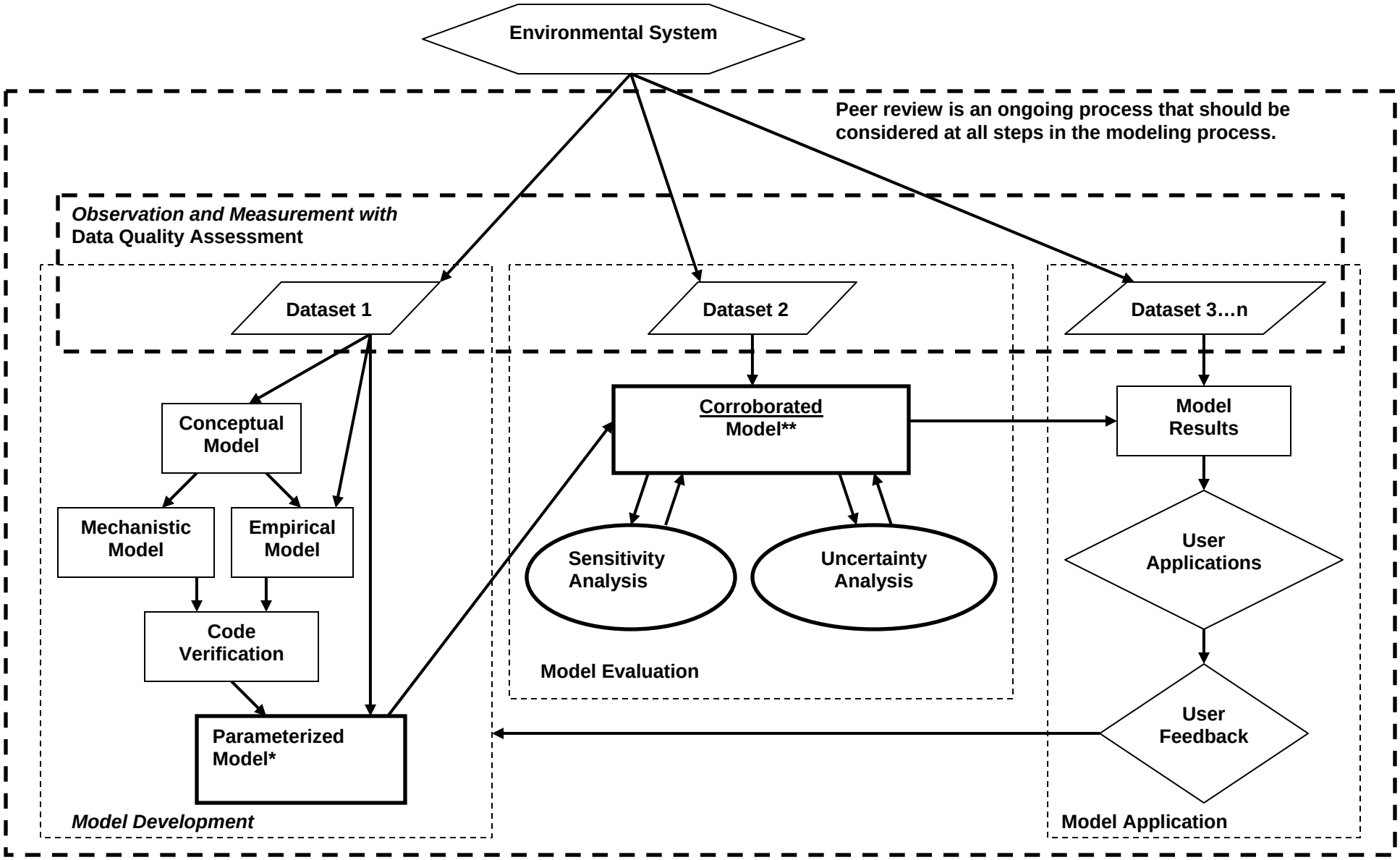

Figure D.1.1. The modeling process.
* In some disciplines parameterization may include, or be referred to as, calibration.
** Qualitative and/or quantitative corroboration should be performed when necessary.

D.2 Scientific Peer Review

EPA policy states that major science-based and technical products related to Agency decisions should normally be peer-reviewed. Agency managers determine and are accountable for the decision whether to employ peer review in particular instances and, if so, its character, scope, and timing. EPA has published guidance for program managers responsible for implementing the peer review process for models (Beck et al. 1994). This guidance discusses peer review mechanisms, the relationship of external peer review to the process of environmental regulatory model development and application, documentation of the peer review process, and specific elements of what could be covered in an external peer review of model development and application.

The general process for external peer review of models is as follows (Beck et al. 1994, Press 1992):

- Step 0: The program manager within the originating office (AA-ship or Region) identifies elements of the regulatory process that would benefit from the use of environmental models. A review/solicitation of currently available models and related research should be conducted. If it is concluded that the development of a new model is necessary, a research/development work plan is prepared.
- Step 0b (optional): The program manager may consider internal and/or external peer review of the research/development concepts to determine whether they are of sufficient merit and whether the model is likely to achieve the stated purpose.
- Step 1: The originating office develops a new or revised model or evaluates the possible novel application of a model developed for a different purpose.
- Step 1b (optional): The program manager may consider internal and/or external peer review of the technical or theoretical basis prior to final development, revision, or application at this stage. For model development, this review should evaluate the stated application niche.
- Step 2: Initial Agency-wide (internal) peer review/consultation of model development and/or proposed application may be undertaken by the developing originating office. Model design, default parameters, etc., and/or intended application are revised (if necessary) based on consideration of internal peer review comments.
- Step 3: The origination office considers external peer review. Model design, default parameters, etc., and/or intended application are revised (if necessary) based on consideration of internal peer review comments.
- Step 4: Final Agency-wide evaluation/consultation may be implemented by the originating office. This step should consist of consideration of external peer review comments and documentation of the Agency's response to scientific/technical issues.

(Note: Steps 2 and 4 are relevant when there is either an internal Agency standing or an ad hoc peer review committee or process).

Box D1: Elements of External Peer Review for Environmental Regulatory Models (Box 2-4 from NRC's *Models in Environmental Regulatory Decision Making*)

Model Purpose/Objectives

- What is the regulatory context in which the model will be used and what broad scientific question is the model intended to answer?
- What is the model's application niche?
- What are the model's strengths and weaknesses?

Major Defining and Limiting Considerations

- Which processes are characterized by the model?
- What are the important temporal and spatial scales?
- What is the level of aggregation?

Theoretical Basis for the Model — formulating the basis for problem solution

- What algorithms are used within the model and how were they derived?
- What is the method of solution?
- What are the shortcomings of the modeling approach?

Parameter Estimation

- What methods and data were used for parameter estimation?
- What methods were used to estimate parameters for which there were no data?
- What are the boundary conditions and are they appropriate?

Data Quality/Quantity

Questions related to model design include:

- What data were utilized in the design of the model?
- How can the adequacy of the data be defined taking into account the regulatory objectives of the model?

Questions related to model application include:

- To what extent are these data available and what are the key data gaps?
- Do additional data need to be collected and for what purpose?

Key Assumptions

- What are the key assumptions?
- What is the basis for each key assumption and what is the range of possible alternatives?
- How sensitive is the model toward modifying key assumptions?

Model Performance Measures

- What criteria have been used to assess model performance?
- Did the data bases used in the performance evaluation provide an adequate test of the model?
- How does the model perform relative to other models in this application niche?

Model Documentation and Users Guide

- Does the documentation cover model applicability and limitations, data input, and interpretation of results?

Retrospective

- Does the model satisfy its intended scientific and regulatory objectives?
- How robust are the model predictions?
- How well does the model output quantify the overall uncertainty?

Source: EPA 1994b.

D.3 Quality Assurance Project Planning

Box D2: Quality Assurance Planning and Data Acceptance Criteria
The QA Project Plan needs to address four issues regarding information on how non-direct measurements are acquired and used on the project (EPA 2002d):

- The need and intended use of each type of data or information to be acquired.
- How the data will be identified or acquired, and expected sources of these data.
- The method of determining the underlying quality of the data.
- The criteria established for determining whether the level of quality for a given set of data is acceptable for use on the project.

Acceptance criteria for individual data values generally address issues such as the following:

Representativeness: Were the data collected from a population sufficiently similar to the population of interest and the model-specified population boundaries? Were the sampling and analytical methods used to generate the collected data acceptable to this project? How will potentially confounding effects in the data (e.g., season, time of day, location, and scale incompatibilities) be addressed so that these effects do not unduly impact the model output?

Bias: Would any characteristics of the dataset directly impact the model output (e.g., unduly high or low process rates)? For example, has bias in analysis results been documented? Is there sufficient information to estimate and correct bias? If using data to develop probabilistic distributions, are there adequate data in the upper and lower extremes of the tails to allow for unbiased probabilistic estimates?

Precision: How is the spread in the results estimated? Is the estimate of variability sufficiently small to meet the uncertainty objectives of the modeling project as stated in Element A7 (Quality Objectives and Criteria for Model Inputs/Outputs) (e.g., adequate to provide a frequency of distribution)?

Qualifiers: Have the data been evaluated in a manner that permits logical decisions on the data's applicability to the current project? Is the system of qualifying or flagging data adequately documented to allow data from different sources to be used on the same project (e.g., distinguish actual measurements from estimated values, note differences in detection limits)?

Summarization: Is the data summarization process clear and sufficiently consistent with the goals of this project (e.g., distinguish averages or statistically transformed values from unaltered measurement values)? Ideally, processing and transformation equations will be made available so that their underlying assumptions can be evaluated against the objectives of the current project.

D.4 Corroboration

In this guidance, "corroboration" is defined as all quantitative and qualitative methods for evaluating the degree to which a model corresponds to reality. In practical terms, it is the process of "confronting models with data" (Hilborn and Mangel 1997). In some disciplines, this process has been referred to as validation. In general, the term "corroboration" is preferred because it implies a claim of usefulness and not truth.

Corroboration is used to understand how consistent the model is with data. However, uncertainty and variability affect how accurately both models and data represent reality because both models and data (observations) are approximations of some system. Thus, to conduct corroboration meaningfully (i.e., as a tool to assess how well a model represents the system being modeled), this process should begin by characterizing the uncertainty and variability in the corroboration data. As discussed in Section 4.1.3.1,

variability stems from the natural randomness or stochasticity of natural systems and can be better captured or characterized in a model but not reduced. In contrast, uncertainty can be minimized with improvements in model structure (framework), improved measurement and analytical techniques, and more comprehensive data for the system being studied. Hence, even a "perfect" model (that contains no measurement error and predicts the correct ensemble average) may deviate from observed field measurements at a given time.

Depending on the type (qualitative and/or quantitative) and availability of data, corroboration can involve hypothesis testing and/or estimates of the likelihood of different model outcomes.

D.4.1 Qualitative Corroboration

Qualitative model corroboration involves expert judgment and tests of intuitive behavior. This type of corroboration uses “knowledge” of the behavior of the system in question, but is not formalized or statistics-based. Expert knowledge can establish model reliability through *consensus* and *consistency*. For example, an expert panel consisting of model developers and stakeholders could be convened to determine whether there is agreement that the methods and outputs of a model are consistent with processes, standards, and results used in other models. Expert judgment can also establish model credibility by determining if model-predicted behavior of a system agrees with best-available understanding of internal processes and functions.

D.4.2 Quantitative Methods

When data are available, model corroboration may involve comparing model predictions to independent empirical observations to investigate how well a model's description of the world fits the observational data. This involves using both statistical measures for goodness of fit and numerical procedures to facilitate these calculations. The can be done graphically or by calculating various statistical measures of fit of a model’s results to data.

Recall that a model’s *application niche* is the set of conditions under which the use of a model is scientifically defensible (Section 5.2.3); it is the domain of a model’s intended applicability. If the model being evaluated purports to estimate an average value across the entire system, then one method to deal with corroboration data is to stratify model results and observed data into “regimes,” subsets of data within which system processes operate similarly. Corroboration is then performed by comparing the average of model estimates and observed data within each regime (ASTM 2000).

D.4.2.1 Graphical Methods

Graphical methods can be used to compare the *distribution* of model outputs to independent observations. The degree to which these two distributions overlap, and their respective shapes, provide an indication of model performance with respect to the data. Alternately, the differences between observed and predicted data pairs can be plotted and the resulting probability density function (PDF) used to indicate precisions and bias. Graphical methods for model corroboration can be used to indicate bias, skewness, and kurtosis of model results. Skewness indicates the relative precision of model results, while bias is a reflection of accuracy. Kurtosis refers to the amplitude of the PDF.

D.4.2.2 Deviance Measures

Methods for calculating model bias:

Mean error calculates the average deviation between models and data (e = model-data) by dividing the sum of errors (Σe) by total number of data points compared (m).

$$MeanError = \frac{\Sigma e}{m} \quad \text{(in original measurement units)}$$

Similarly, **mean % error** provides a unit-less measure of model bias:

$$MeanError(\%) = \frac{\Sigma e / s}{m} * 100 \,,$$

where "s" is the sample or observational data in original units.

Methods for calculating bias and precision:
Mean square error (MSE):

$$MSE = \frac{\Sigma e^2}{m}$$

(Large deviations in any single data pair (model-data) can dominate this metric.)

Mean absolute error:

$$MeanAbsError = \frac{\Sigma |e|}{m}$$

D.4.2.3 Statistical Tests

A more formal hypothesis testing procedure can also be used for model corroboration. In such cases, a test is performed to determine if the model outputs are statistically significantly different from the empirical data. Important considerations in these tests are the probability of making type I and type II errors and the shape of the data distributions, as most of these metrics assume the data are distributed normally. The test-statistic used should also be based on the number of data-pairs (observed and predicted) available.

There are a number of comprehensive texts that may help analysts determine the appropriate statistical and numerical procedures for conducting model corroboration. These include:

- Efron, B., and R. Tibshirani. 1993. *An Introduction to the Bootstrap*. New York: Chapman and Hall.
- Gelman, A.J.B., H.S. Carlin, and D.B. Rubin. 1995. *Bayesian Data Analysis*. New York: Chapman and Hall.
- McCullagh, P., and J.A. Nelder. 1989. *Generalized Linear Models*. New York: Chapman and Hall.
- Press, W.H., B.P. Flannery, S.A. Teukolsky, and W.T. Vetterling. 1986. *Numerical Recipes*. Cambridge, UK: Cambridge University Press.
- Snedecor, G.W., and W.G. Cochran. 1989. *Statistical Methods*. Eighth Ed. Iowa State University Press.

D.4.3 Evaluating Multiple Models

> *Models are metaphorical (albeit sometimes accurate) descriptions of nature, and there can never be a "correct" model. There may be a "best" model, which is more consistent with the data than any of its competitors, or several models may be contenders because each is consistent in some way with the data and none clearly dominates the others. It is the job of the ecological detective to determine the support that the data offer for each competing model or hypothesis.*
> — Hillborn and Mangel 1997, *Ecological Detective*

In the simplest sense, a first cut of model performance is obtained by examining which model minimizes the sum of squares (SSq) between observed and model-predicted data.

$$SSq = \sum (pred - obs)^2$$

The SSq is equal to the squared differences between model-predicted values and observational values. If data are used to fit models and estimate parameters, the fit will automatically improve with each higher-order model — e.g., simple linear model, $y = a + bX$, vs. a polynomial model, $y = a + bX + cX^2$.

It is therefore useful to apply a penalty for additional parameters to determine if the improvement in model performance (minimizing SSq deviation) justifies an increase in model complexity. The question is essential whether the decrease in the sum of squares is statistically significant.

The SSq is best applied when comparing several models using a single dataset. However, if several datasets are available the Normalized Mean Square Error (NMSE) is typically a better statistic, as it is normalized to the product of the means of the observed and predicted values (see discussion and references, Section D.4.4.4).

D.4.4 An Example Protocol for Selecting a Set of Best Performing Models

During the development phase of an air quality dispersion model and in subsequent upgrades, model performance is constantly evaluated. These evaluations generally compare simulation results using simple methods that do not account for the fact that models only predict a portion of the variability seen in the observations. To fill a part of this void, the U.S. Environmental Protection Agency (EPA) developed a standard that has been adopted by the ASTM International, designation D 6589–00 for Statistical Evaluation of Atmospheric Dispersion Model Performance (ASTM 2000). The following discussion summarizes some of the issues discussed in D 6589.

D.4.4.1 Define Evaluation Objectives

Performing a statistical model evaluation involves defining those evaluation objectives (features or characteristics) within the pattern of observed and modeled concentration values that are of interest to compare. As yet, no one feature or characteristic has been found that can be defined within a concentration pattern that will fully test a model's performance. For instance, the maximum surface concentration may appear unbiased through a compensation of errors in estimating the lateral extent of the dispersing material and in estimating the vertical extent of the dispersing material. Adding into consideration that other biases may exist (e.g., in treatment of the chemical and removal processes during transport, in estimating buoyant plume rise, in accounting for wind direction changes with height, in accounting for penetration of material into layers above the current mixing depth, in systematic variation in all of these biases as a function of atmospheric stability), one can appreciate that there are many ways that a model can falsely give the appearance of good performance.

In principle, modeling diffusion involves characterizing the size and shape of the volume into which the material is dispersing as well as the distribution of the material within this volume. Volumes have three dimensions, so a model evaluation will be more complete if it tests the model's ability to characterize diffusion along more than one of these dimensions.

D.4.4.2 Define Evaluation Procedures

Having selected evaluation objectives for comparison, the next step is to establish an evaluation procedure (or series of procedures), which defines how each evaluation objective will be derived from the available information. Development of statistical model evaluation procedures begins with technical definitions of the terminology used in the goal statement. In the following discussion, we use a plume dispersion model example, but the thought process is valid as well for regional photochemical grid models.

Suppose the evaluation goal is to test models' ability to replicate the average centerline concentration as a function of transport downwind and as a function of atmospheric stability. Several questions must be answered to achieve this goal: What is an "average centerline concentration"? What is "transport downwind"? How will "stability" be defined?

What questions arise in defining the average centerline concentration? Given a sampling arc of concentration values, it is necessary to decide whether the centerline concentration is the maximum value

seen anywhere along the arc or that seen near the center of mass of the observed lateral concentration distribution. If one chooses the latter concept, one needs a definition of how ”near” the center of mass one has to be, to be representative of a centerline concentration value. One might decide to select all values within a specific range (nearness to the center of mass). In such a case, either a definition or a procedure will be needed to define how this specific range will be determined. A decision will have to be made on the treatment of observed zero (and near measurement threshold) concentrations. To discard such values is to say that low concentrations cannot occur near a plume’s center of mass, which is a dubious assumption. One might test to see if conclusions reached regarding the “best performing model” are sensitive to the decision made on the treatment of near-zero concentrations.

What questions arise in defining “transport downwind”? During near-calm wind conditions, when transport may have favored more than one direction over the sampling period, ”downwind” is not well described by one direction. If plume models are being tested, one might exclude near-calm conditions, since plume models are not meant to provide meaningful results during such conditions. If puff models or grid models are being tested, one might sort the near-calm cases into a special regime for analysis.

What questions arise in defining “stability”? For surface releases, surface-layer Monin-Obukhov length, L, has been found to adequately define stability effects; for elevated releases, Z_i/L, where Z_i is the mixing depth, has been found to be a useful parameter for describing stability effects. Each model likely has its own meteorological processor. It is likely that different processors will have different values for L and Z_i for each of the evaluation cases. There is no one best way to deal with this problem. One solution might be to sort the data into regimes using each of the models’ input values, and see if the conclusions reached as to best performing model are affected.

What questions arise if one is grouping data together? If one is grouping data together for which the emission rates are different, one might choose to resolve this difference by normalizing the concentration values by dividing by the respective emission rates. To divide by the emission rate, either one has a constant emission rate over the entire release or the downwind transport is sufficiently obvious that one can compute an emission rate, based on travel time, that is appropriate for each downwind distance.

Characterizing the plume transport direction is highly uncertain, even with meteorological data collected specific for the purpose. Thus, we expect that the simulated position of the plume will not overlap the observed position of the plume. One must decide how to compare a feature (or characteristic) in a concentration pattern, when uncertainties in transport direction are large. Will the observed and modeled patterns be shifted, and if so, in what manner?

This discussion is not meant to be exhaustive, but to be illustrative of how the thought process might evolve. When terms are defined, other questions arise that — when resolved — eventually produce an analysis that will compute the evaluation objective from the available data. There likely is more than one answer to the questions that develop. This may cause different people to develop different objectives and procedures for the same goal. If the same set of models is chosen as the best-performing, regardless of which path is chosen, one can likely be assured that the conclusions reached are robust.

D.4.4.3 Define Trends in Modeling Bias

In this discussion, references to observed and modeled values refer to the observed and model evaluation objectives (e.g., regime averages). A plot of the observed and modeled values as a function of one of the model input parameters is a direct means for detecting model bias. Such comparison has been recommended and employed in a variety of investigations, e.g., Fox (1981), Weil et al. (1992), Hanna (1993) In some cases the comparison is the ratio formed by dividing the modeled value by the observed value, plotted as a function of one or more of the model input parameters. If the data have been stratified into regimes, one can also display the standard error estimates on the respective modeled and observed regime averages. If the respective averages are encompassed by the error bars (typically plus and minus two times the standard error estimates), one can assume the differences are not significant. As Hanna [11] describes, this a “seductive” inference. Procedures to provide a robust assessment of the significance of the differences are defined in ASTM D 6589 (ASTM 2000).

D.4.4.4 Summary of Performance

As an example of overall summary of performance, we will discuss a procedure constructed using the scheme introduced by Cox and Tikvart (1990) as a template. The design for statistically summarizing model performance over several regimes is envisioned as a five-step procedure.

1. Form a replicate sample using concurrent sampling of the observed and modeled values for each regime. Concurrent sampling associates results from all models with each observed value, so that selection of an observed value automatically selects the corresponding estimates by all models.
2. Compute the average of observed and modeled values for each regime.
3. Compute the normalized mean square error, NMSE, using the computed regime averages, and store the value of the NMSE computed for this pass of the bootstrap sampling.
4. Repeat steps 1 through 3 for all bootstrap sampling passes (typically of order 500).
5. Implement the procedure described in ASTM D 6589 (ASTM 2000) to detect which model has the lowest computed NMSE value (call this the “base” model) and which models have NMSE values that are significantly different from the ”base” model.

In the Cox and Tikvart (1990) analysis, the data were sorted into regimes (defined in terms of Pasquill stability category and low/high wind speed classes), and bootstrap sampling was used to develop standard error estimates on the comparisons. The performance measure was the robust highest concentration (computed from the raw observed cumulative frequency distribution), which is a comparison of the highest concentration values (maxima), which most models do not contain the physics to simulate. This procedure can be improved if intensive field data are used and the performance measure is the NMSE computed from the modeled and observed regime averages of centerline concentration values as a function of stability along each downwind arc, where each regime is a particular distance downwind for a defined stability range.

The data demands are much greater for using regime averages than for using individual concentrations. Procedures that analyze groups (regimes) of data include intensive tracer field studies, with a dense receptor network, and many experiments. Whereas, Cox and Tikvart (1990) devised their analysis to make use of very sparse receptor networks having one or more years of sampling results. With dense receptor networks, attempts can be made to compare average modeled and ”observed” centerline concentration values, but only a few of these experiments have sufficient data to allow stratification of the data into regimes for analysis. With sparse receptor networks, there are more data for analysis, but there is insufficient information to define the observed maxima relative to the dispersing plume’s center of mass. Thus, there is uncertainty as to whether or not the observed maxima are representative of centerline concentration values. It is not obvious that the average of the *n* (say 25) observed maximum hourly concentration values (for a particular distance downwind and narrowly defined stability range) is the ensemble average centerline concentration the model is predicting. In fact, one might anticipate that the average of the *n* maximum concentration values is likely to be higher than the ensemble average of the centerline concentration. Thus the testing procedure outlined by Cox and Tikvart (1990) may favor selection of poorly formed models that routinely underestimate the lateral diffusion (and thereby overestimate the plume centerline concentration). This in turn, may bias such models’ ability to characterize concentration patterns for longer averaging times.

It is therefore concluded that once a set of “best-performing models” has been selected from an evaluation using intensive field data that tests a model’s ability to predict the average characteristics to be seen in the observed concentration patterns, evaluations using sparse networks are seen as useful extensions to further explore the performance of well-formulated models for other environs and purposes.

D.5 Sensitivity Analysis

This section provides a broad overview of uncertainty and sensitivity analyses and introduces various methods used to conduct the latter. A table at the end of this section summarizes these methods’ primary features and citations to additional resources for computational detail.

D.5.1 Introducing Sensitivity Analyses and Uncertainty Analysis

A model approximates reality in the face of scientific uncertainties. Section 4.1.3.1 identifies and defines various sources of model uncertainty. External peer reviewers of EPA models have consistently recommended that EPA communicate this uncertainty through uncertainty analysis and sensitivity analysis, two related disciplines. Uncertainty analysis investigates the effects of lack of knowledge or potential errors of model inputs (e.g., the "uncertainty" associated with parameter values); when combined with sensitivity analysis, it allows a model user to be more informed about the confidence that can be placed in model results. Sensitivity analysis measures the effect of changes in input values or assumptions (including boundaries and model functional form) on the outputs (Morgan and Henrion 1990); it is the study of how uncertainty in a model output can be systematically apportioned to different sources of uncertainty in the model input (Beck et al. 1994). By investigating the "relative sensitivity" of model parameters, a user can become knowledgeable of the relative importance of parameters in the model.

Consider a model represented as a function *f*, with inputs x_1 and x_2, and with output *y*, such that $y = f(x_1,x_2)$. Figure D.5.1 schematically depicts how uncertainty analysis and sensitivity analysis would be conducted for this model. Uncertainty analysis would be conducted by determining how *y* responds to variation in inputs x_1 and x_2, the graphic depiction of which is referred to as the model's response surface. Sensitivity analysis would be conducted by apportioning the respective contributions of x_1 and x_2 to changes in *y*. The schematic should *not* be construed to imply that uncertainty analysis and sensitivity analysis are sequential events. Rather, they are generally conducted by trial and error, with each type of analysis informing the other. Indeed, in practice, the distinction between these two related disciplines may be irrelevant. For purposes of clarity, the remainder of this appendix will refer exclusively to sensitivity analysis.

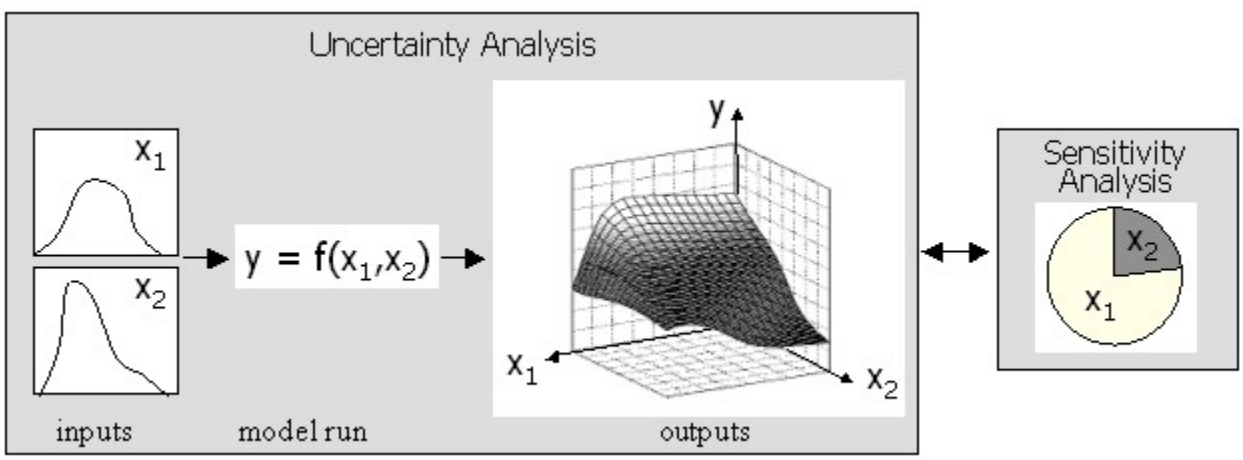

Figure D.5.1. Uncertainty and sensitivity analyses. Uncertainty analysis investigates the effects of lack of knowledge or potential errors of model inputs. Sensitivity analysis evaluates the respective contributions of inputs x_1 and x_2 to output *y*.

D.5.2 Sensitivity Analysis and Computational Complexity

Choosing the appropriate uncertainty analysis/sensitivity analysis method is often a matter of trading off between the amount of information one wants from the analyses and the computational difficulties of the analyses. These computational difficulties are often inversely related to the number of assumptions one is willing or able to make about the shape of a model's response surface.

Consider once again a model represented as a function *f*, with inputs x_1 and x_2 and with output *y*, such that $y = f(x_1,x_2)$. *Sensitivity* measures how output changes with respect to an input. This is a straightforward enough procedure with differential analysis if the analyst:

- Can assume that the model's response surface is a hyperplane, as in Figure D.5.2(1);
- Accepts that the results apply only to specific points on the response surface and that these points are monotonic first order, as in Figure D.5.2 (2);[10] or
- Is unconcerned about interactions among the input variables.

Otherwise, sensitivity analysis may be more appropriately conducted using more intensive computational methods.

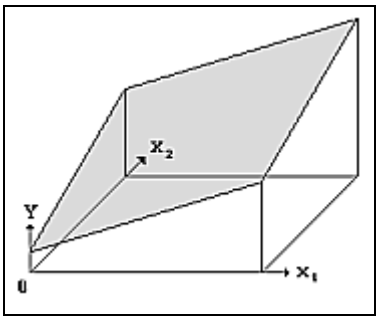

(1)

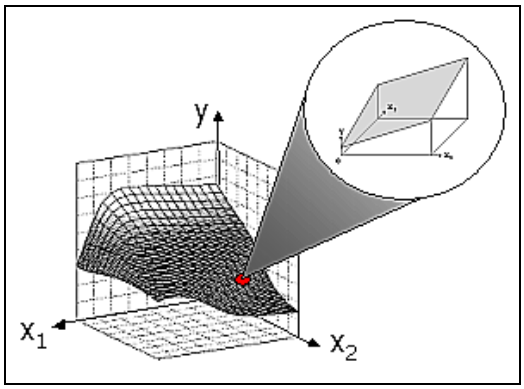

(2)

Figure D.5.2. It's hyperplane and simple. (1) A model response surface that is a hyperplane can simplify sensitivity analysis computations. (2) The same computations can also be used for other response surfaces, but only as approximations around a single locus.

This guidance suggests that, depending on assumptions underlying the model, the analyst should use non-intensive sensitivity analysis techniques to initially identify those inputs that generate the most sensitivity, then apply more intensive methods to this smaller subset of inputs. It may therefore be useful to categorize the various sensitivity analysis techniques into methods that (a) can be quickly used to screen for the more important input factors; (b) are based on differential analyses; (c) are based on sampling; and (d) are based on variance methods.

D.5.3 Screening Tools

D.5.3.1 Tools That Require No Model Runs

Cullen and Frey (1999) suggest that summary statistics measuring input uncertainty can serve as preliminary screening tools without additional model runs (and if the models are simple and linear), indicating proportionate contributions to output uncertainty:

- *Coefficient of variation*. The coefficient of variation is the standard deviation normalized to the mean (σ/μ) in order to reduce the possibility that inputs that take on large values are given undue importance.
- *Gaussian approximation.* Another approach to apportioning input variance is Gaussian approximation. Using this method, the variance of a model's output is estimated as the sum of the variances of the inputs (for additive models) or the sum of the variances of the log-transformed inputs (for multiplicative models), weighted by the squares on any constants which may be multiplied by the inputs as they occur in the model.

D.5.3.2 Scatterplots

Cullen and Frey (1999) suggest that a high correlation between an input and an output variable may indicate substantial dependence of the variation in output and the variation of the input. A simple, visual

[10] Related to this issue are the terms "local sensitivity analysis" and "global sensitivity analysis." The former refers to sensitivity analysis conducted around a nominal point of the response surface, while the latter refers to sensitivity analysis across the entire surface.

assessment of the influence of an input on the output is therefore possible using scatterplots, with each plot posing a selected input against the output, as in Figure D.5.3.

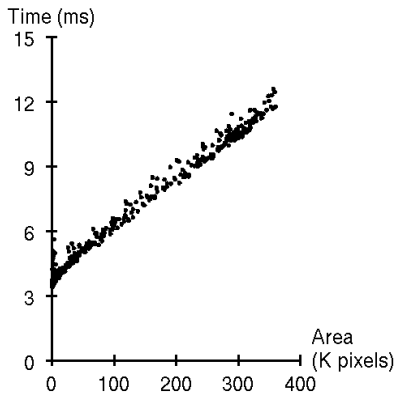

Figure D.5.3. Correlation as indication of input effect. The high correlation between the input variable area and the output variable time (holding all other variables fixed) is an indication of the possible effect of area's variation on the output.

D.5.3.3 Morris's OAT

The key concept underlying one-at-a-time (OAT) sensitivity analyses is to choose a base case of input values and to perturb each input variable by a given percentage away from the base value while holding all other input variables constant. Most OAT sensitivity analysis methods yield *local* measures of sensitivity (see footnote 9) that depend on the choice of base case values. To avoid this bias, Saltelli et al. (2000b) recommend using Morris's OAT for screening purposes because it is a *global* sensitivity analysis method — it entails computing a number of local measures (randomly extracted across the input space) and then taking their average.

Morris's OAT provides a measure of the importance of an input factor in generating output variation, and while it does not quantify interaction effects, it does provide an indication of the presence of interaction. Figure D.5.4 presents the results that one would expect to obtain from applying Morris's OAT (Cossarini et al. 2002). Computational methods for this technique are described in Saltelli et al. 2000b.

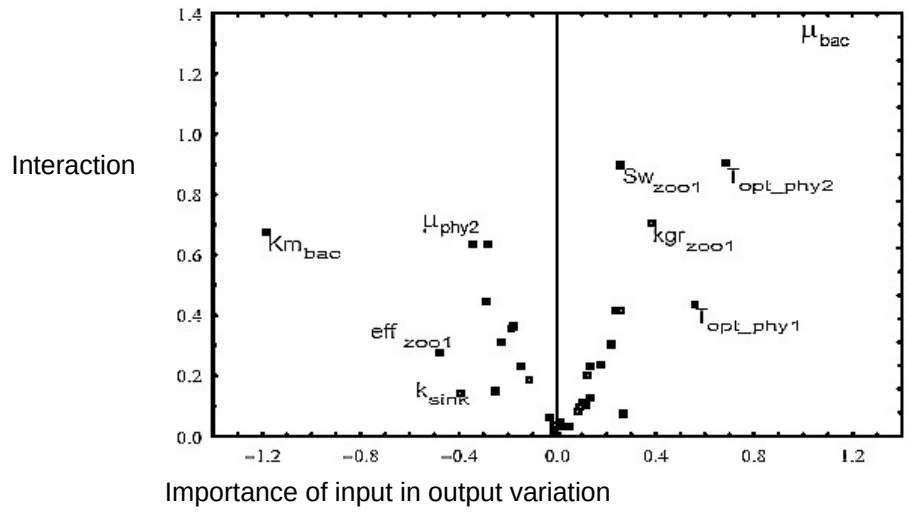

Figure D.5.4. An application of Morris's OAT. Cossarini et al. (2002) investigated the influence of various ecological factors on energy flow through a food web. Their sensitivity analysis indicated that maximum bacteria growth and bacteria mortality (μ_{bac} and Km_{bac}, respectively) have the largest (and opposite) effects on energy flow, as indicated by their values on the horizontal axis. These effects, as indicated by their values on the vertical axis, resulted from interactions with other factors.

D.5.4 Methods Based on Differential Analysis

As noted previously, differential analyses may be used to analyze sensitivity if the analyst is willing either to assume that the model response surface is hyperplanar or to accept that the sensitivity analysis results are local and that they are based on hyperplanar approximations tangent to the response surface at the nominal scenario (Morgan and Henrion 1990; Saltelli et al. 2000b).

Differential analyses entail four steps. First, select base values and ranges for input factors. Second, using these input base values, develop a Taylor series approximation to the output. Third, estimate uncertainty in output in terms of its expected value and variance using variance propagation techniques. Finally, use the Taylor series approximations to estimate the importance of individual input factors (Saltelli et al. 2000b). Computational methods for this technique are described in Morgan and Henrion 1990.

D.5.5 Methods Based on Sampling

One approach to estimating the impact of input uncertainties is to repeatedly run a model using randomly sampled values from the input space. The most well-known method using this approach is Monte Carlo analysis. In a Monte Carlo simulation, a model is run repeatedly. With each run, different input values are drawn randomly from the probability distribution functions of each input, thereby generating multiple output values (Morgan and Henrion 1990; Cullen and Frey 1999). One can view a Monte Carlo simulation as a process through which multiple scenarios generate multiple output values; although each execution of the model run is deterministic, the set of output values may be represented as a cumulative distribution function and summarized using statistical measures (Cullen and Frey 1999).

EPA proposes several best principles of good practice for the conduct of Monte Carlo simulations (EPA 1997). They include the following:

- Conduct preliminary sensitivity analyses to identify significant model components and input variables that make important contributions to model uncertainty.
- When deciding upon a probability distribution function (PDF) for input variables, consider the following questions: Is there any mechanistic basis for choosing a distributional family? Is the PDF likely to be dictated by physical, biological, or other properties and mechanisms? Is the variable

discrete or continuous? What are the bounds of the variable? Is the PDF symmetric or skewed, and if skewed, in which direction?

- Base the PDF on empirical, representative data.
- If expert judgment is used as the basis for the PDF, document explicitly the reasoning underlying this opinion.
- Discuss the presence or absence of covariance among the input variables, which can significantly affect the output.

The preceding points merely summarize some of the main points raised in EPA's Guidance on Monte Carlo Analysis. That document should be consulted for more detailed guidance. Conducting Monte Carlo analysis may be problematic for models containing a large number of input variables. Fortunately, there are several approaches to dealing with this problem:

- *Brute force approach*. One approach is to increase sheer computing power. For example, EPA's ORD is developing a Java-based tool that facilitates Monte Carlo analyses across a cluster of PCs by harnessing the computing power of multiple workstations to conduct multiple runs for a complex model (Babendreier and Castleton 2002).
- *Smaller, structured trials*. The value of Monte Carlo lies not in the randomness of sampling, but in achieving representative properties of sets of points in the input space. Therefore, rather than sampling data from entire input space, computations may be through *stratified sampling* by dividing the input sample space into strata and sampling from within each stratum. A widely used method for stratified sampling is *Latin hypercube sampling,* comprehensively described in Cullen and Frey 1999.
- *Response surface model surrogate*. The analyst may also choose to conduct Monte Carlo not on the complex model directly, but rather on a response surface representation of it. The latter is a simplified representation of the relationship between a selected number of model outputs and a selected number of model inputs, with all other model inputs held at fixed values (Morgan and Henrion 1990; Saltelli et al. 2000b).

D.5.6 Methods Based on Variance

Consider once again a model represented as a function f, with inputs x_1 and x_2 and with output y, such that $y = f(x_1,x_2)$. The input variables are affected by uncertainties and may take on any number of possible values. Let X denote an input vector randomly chosen from among all possible values for x_1 and x_2. The output y for a given X can also be seen as a realization of a random variable Y. Let $E(Y|X)$ denote the expectation of Y conditional on a fixed value of X. If the total variation in y is matched by the variability in $E(Y|X)$ as x_1 is allowed to vary, this is an indication that variation in x_1 significantly affects y.

The variance-based approaches to sensitivity analysis are based on the estimation of what fraction of total variation of y is attributable to variability in $E(Y|X)$ as a subset of input factors are allowed to vary. Three methods for computing this estimation (correlation ratio, Sobol, and Fourier amplitude sensitivity test) are featured in Saltelli et al. 2000b.

D.5.7 Which Method to Use?

A panel of experts was recently assembled to review various sensitivity analysis methods. The panel refrained from explicitly recommending a "best" method and instead developed a list of attributes for preferred sensitivity analysis methods. The panel recommended that methods should preferably be able to deal with a model regardless of assumptions about a model's linearity and additivity, consider interaction effects among input uncertainties, cope with differences in the scale and shape of input PDFs, cope with differences in input spatial and temporal dimensions, and evaluate the effect of an input while all other inputs are allowed to vary as well (Frey 2002; Saltelli 2002). Of the various methods discussed above, only those based on variance (Section D.5.6) are characterized by these attributes. When one or more of the criteria are not important, the other tools discussed in this section will provide a reasonable sensitivity assessment.

As mentioned earlier, choosing the most appropriate sensitivity analysis method will often entail a trade-off between computational complexity, model assumptions, and the amount of information needed from

the sensitivity analysis. As an aid to sensitivity analysis method selection, the table below summarizes the features and caveats of the methods discussed above.

Method	Features	Caveats	Reference
Screening methods	May be conducted independent of model run	Potential for significant error if model is non-linear	Cullen and Frey 1999, pp. 247-8.
Morris's one-at-a-time	Global sensitivity analysis	Indicates, but does not quantify interactions	Saltelli et al. 2000b, p. 68.
Differential analyses	Global sensitivity analysis for linear model; local sensitivity analysis for nonlinear model	No treatment of interactions among inputs Assumes linearity, monotonicity, and continuity	Cullen and Frey 1999, pp. 186-94. Saltelli et al. 2000b, pp. 183-91
Monte Carlo analyses	Intuitive No assumptions regarding response surface	Depending on number of input variables, may be time-consuming to run, but methods to simplify are available May rely on assumptions regarding input PDFs	Cullen and Frey 1999, pp. 196-237 Morgan and Henrion 1990, pp. 198-216.
Variance-based	Robust and independent of model assumptions Addresses interactions	May be computationally difficult.	Saltelli et al. 2000b, pp. 167-97

D.6 Uncertainty Analysis

D.6.1 Model Suitability

An evaluation of model suitability to resolve application niche uncertainty (Section 4.1.3.1) should precede any evaluation of data uncertainty and model performance. The extent to which a model is suitable for a proposed application depends on:

- Mapping of model attributes to the problem statement
- The degree of certainty needed in model outputs
- The amount of reliable data available or resources available to collect additional data
- Quality of the state of knowledge on which the model is based
- Technical competence of those undertaking simulation modeling

Appropriate data should be available before any attempt is made to apply a model. A model that needs detailed, precise input data should not be used when such data are unavailable.

D.6.2 Data Uncertainty

There are two statistical paradigms that can be adopted to summarize data. The first employs classical statistics and is useful for capturing the most likely or "average" conditions observed in a given system. This is known as the "frequentist" approach to summarizing model input data. Frequentist statistics rely on measures of central tendency (median, mode, mean values) and represent uncertainty as the deviation from these metrics. A frequentist or "deterministic" model produces a single set of solutions for each model run. In contrast, the alternate statistical paradigm employs a probabilistic framework, which summarizes data according to their "likelihood" of occurrence. Input data are represented as distributions rather than a single numerical value and models outputs capture a range of possible values.

The classical view of probability defines the probability of an event occurring by the value to which the long run frequency of an event or quantity converges as the number of trials increases (Morgan and Henrion 1990). Classical statistics relies on measures of central tendency (mean, median, mode) to

define model parameters and their associated uncertainty (standard deviation, standard error, confidence intervals).

In contrast to the classical view, a subjectivist or Bayesian view is that the probability of an event is the current degree of belief that a person has that it will occur, given all of the relevant information currently known to that person. This framework involves the use of probability distributions based on likelihoods functions to represent model input values and employs techniques like Bayesian updating and Monte Carlo methods as statistical evaluation tools (Morgan and Henrion 1990).

EXHIBIT 52

ENVIRONMENTAL PROTECTION AGENCY

[OPP-38509; FRL-3846-4]

Existing Stocks of Pesticide Products; Statement of Policy

AGENCY: Environmental Protection Agency (EPA).

ACTION: Notice; statement of policy.

SUMMARY: This Statement summarizes the policies that will generally guide EPA in making individual decisions concerning whether, and under what conditions, the Agency will permit the continued sale, distribution, and use of existing stocks of pesticide products whose registrations under the Federal Insecticide, Fungicide, and Rodenticide Act (FIFRA) are amended, cancelled, or suspended. Although most of the policies reflected in this Statement have already been applied by the Agency on a case-by-case basis, EPA now intends to formalize these policies and is soliciting comments from interested persons. If, after reviewing any comments, EPA determines that changes to this Statement are warranted, the Agency will issue a revised Statement of Policy in the Federal Register.

DATES: The policies announced in this Statement are currently in effect. The Agency will review any comments on these policies received by the Agency on or before August 26, 1991. After reviewing such comments, the Agency may issue a revised Statement of Policy.

ADDRESSES: By mail, submit comments to: Public Docket and Freedom of Information Section, Field Operations Division (H7506C), Office of Pesticide Programs, Environmental Protection Agency, 401 M St., SW., Washington DC 20460. In person, deliver comments to: Rm. 246, Crystal Mall #2, 1921 Jefferson Davis Highway, Arlington, VA 22202.

FOR FURTHER INFORMATION CONTACT: By mail: Martha Lamont, Special Review and Reregistration Division (H7508W), Office of Pesticide Programs, Environmental Protection Agency, 401 M St., SW., Washington DC 20460. Office location and telephone number: Special Review Branch, rm. 31L3, Crystal Station 1, 2800 Crystal Drive, Arlington, VA 22202, (703)-308-8033.

SUPPLEMENTARY INFORMATION: The general statement of policy on existing stocks of pesticide products whose registrations under FIFRA are amended, cancelled, or suspended follows.

GENERAL STATEMENT OF POLICY

Table of Contents

I. Application
II. Applicable Statutory Provisions
III. General Policies Applicable to All Existing Stocks
A. Cancelled Pesticides
1. Cancellations where the Agency has identified particular risk concerns.
2. Cancellations where a registrant has failed to comply with an obligation of registration.
a. Failure to pay maintenance fees.
b. Failure to pay reregistration fees.
c. Failure to file information during reregistration.
d. Failure to comply with the terms of a conditional registration.
3. Cancellation of products while subject to data call-in notices under section 3(c)(2)(B).
4. Cancellation of registrations subject to reregistration requirements and label improvement programs.
5. Other voluntary cancellations.
B. Suspended Pesticides
C. Amendments of Registration

I. Application

This Statement of Policy applies to determinations the Agency will make concerning existing stocks of pesticide products whose registrations have been amended, cancelled, or suspended pursuant to sections 3, 4, or 6 of the Federal Insecticide, Fungicide and Rodenticide Act as amended (FIFRA). This Statement also applies to existing stocks of products sold or distributed under a supplemental distributor agreement. It is the responsibility of the registrant to notify such distributors of any applicable existing stock provisions.

For purposes of this Statement, existing stocks are defined as those stocks of a registered pesticide product which are currently in the United States and which have been packaged, labeled, and released for shipment prior to the effective date of the action.

This Statement establishes general principles which the Agency generally will apply in determining whether and under what conditions to allow the sale and use of existing stocks. In general, if there are significant risk concerns associated with a cancelled pesticide, the Agency will make a case-by-case determination as to whether to allow the continued sale or use of existing stocks of the pesticide. The Agency will not allow continued sale, distribution, or use of such a pesticide unless the benefits associated with such sale, distribution, or use exceed the risks.

Where there are no significant risk concerns associated with the cancellation of a pesticide, the Agency will generally allow unlimited use of existing stocks, and unlimited sale by persons other than the registrant. A registrant will generally be allowed to continue to sell existing stocks for 1 year after the date cancellation is requested, or 1 year after the date the registrant has ceased to comply with the responsibilities that are placed upon registrants, whichever date is sooner.

This policy will be implemented on the date of publication of this notice. Because registrants were unaware of the policies contained in this notice, the Agency has decided to provide a 6-month "grace period" before certain aspects of this Policy become fully effective. Specifically, in cases where the Agency has not identified any significant risk concerns, the Agency will allow registrants of products cancelled on or before December 26, 1991 to continue to sell or distribute existing stocks at least until December 26, 1991, notwithstanding the fact that application of the policies set forth in this statement might result in a shorter existing stocks period or an outright prohibition against the sale or distribution by the registrant of any existing stocks.

II. Applicable Statutory Provisions

Under FIFRA section 3, a pesticide product must be registered with EPA before it may be sold or distributed in commerce. EPA may not register a pesticide unless, among other things, it first determines that the product and its use will not cause unreasonable adverse effects on the environment. Once a pesticide product is registered, FIFRA provides a number of different mechanisms for changing the status of a registration. These mechanisms can be grouped into three categories: Changes requested by a registrant; changes imposed by EPA for failure to comply with various obligations imposed upon registrants; and changes imposed by EPA because of a determination by the Agency that use of the pesticide product results in unreasonable adverse effects to man or the environment.

A registrant may request at any time, for any reason, to voluntarily cancel a registration (FIFRA section 6(f)) or to amend the terms and conditions of the registration, most frequently by amending the pesticide product label (FIFRA sections 3(f) and 6(f)). Voluntary amendments to registration can include, among other things, adding or deleting uses, increasing or decreasing application rates, changing the formulation of a pesticide, or changing the label language (such as changing directions for use, warning statements, etc.).

Other changes in registration status are the result of Agency action because of the failure of a registrant to fulfill

certain responsibilities adequately. Each registrant has a continuing obligation to ensure that its registered products comply with the standards for registration. Note that the the term "registration" includes reregistration (see FIFRA section 2(z)). As part of this obligation, a registrant may be required to submit to EPA additional information which the Agency considers necessary to support continued registration. See FIFRA section 3(c)(2)(B). Failure to submit information required by the Agency pursuant to section 3(c)(2)(B) may result in the suspension of a registration until the information is provided.

In addition, registrants of pesticide products containing active ingredients first registered before November 1, 1984, must demonstrate, under FIFRA section 4, that their products meet the current standards for registration and should be reregistered. Failure to comply with certain provisions of section 4 can result in the cancellation or suspension of pesticide registrations. For example, registrations may be cancelled if a registrant fails to pay fees mandated by section 4(i) or fails to provide EPA with certain information during the early stages of the reregistration process (see FIFRA sections 4(d)(5), 4(e)(3) and 4(i)(7)(C)). Failure by registrants to supply other information required during reregistration may result in the suspension of registrations until the required information is provided to EPA (see, e.g., FIFRA sections 4(d)(6) and 4(f)(3)).

If a registration is a conditional registration, the Agency may also take action to cancel the registration pursuant to FIFRA section 6(e) if the registrant fails to meet any of the conditions imposed upon the product at the time of registration.

Finally, changes in the status of a registration may be mandated by EPA to assure that the product or its use does not result in unreasonable adverse effects on the environment. The Agency may reevaluate a pesticide at any time. If EPA determines that a pesticide product (without change in its terms of registration) no longer meets the standard for registration, the Agency may propose cancellation of the product under FIFRA section 6(b) or propose to classify the product for restricted use. Such Agency proposals may at times allow changes in the terms of registration (such as the deletion of particular uses or addition of specified protective measures) as alternatives to cancellation or change in classification. If the Agency determines that use may result not only in unreasonable adverse effects but in an "imminent hazard," EPA may initiate action to suspend the pesticide registration during the pendency of cancellation proceedings (FIFRA section 6(c)).

It is a violation of FIFRA section 12(a)(1)(A) to sell or distribute any pesticide that has been cancelled or suspended, except to the extent that sale or distribution is authorized by EPA. It is also a violation of FIFRA section 12(a)(2)(J) and (K) to violate the terms of a suspension or cancellation order. Thus, unless expressly permitted by the Agency, distribution or sale of existing stocks of cancelled or suspended pesticides is unlawful. Use of such existing stocks, on the other hand, is not unlawful unless specifically prohibited by the Agency in a cancellation or suspension order.

If a pesticide is cancelled under section 6(b) or section 6(e), FIFRA provides in section 6(a)(1) and (e) that the Administrator may permit the continued sale and use of existing stocks of the cancelled pesticide "to such extent, under such conditions, and for such uses as he may specify if he determines that such sale or use is not inconsistent with the purposes of (FIFRA) and will not have unreasonable adverse effects on the environment." FIFRA section 2(bb) defines "unreasonable adverse effects" as "any unreasonable risk to man or the environment, taking into account the economic, social, and environmental costs and benefits of the use of any pesticide." Thus, in determining whether to permit distribution, sale, or use of existing stocks of pesticides cancelled under sections 6(b) or 6(e), EPA must apply the same risk/benefit considerations that are applicable to other Agency actions under FIFRA (except that such considerations would be limited to the context of allowing distribution, sale, or use of existing stocks).

FIFRA does not specify a standard for the Agency to apply in determining whether to allow the distribution, sale, and use of existing stocks of pesticide products cancelled voluntarily pursuant to FIFRA section 6(f) or for failure of the registrant to comply with the requirements of section 4. The Agency has decided to make existing stocks determinations with respect to products cancelled under sections 4 and 6(f) based upon whether distribution, sale, or use of existing stocks would be consistent with the purposes of FIFRA. In determining whether such distribution, sale, or use would be consistent with the purposes of FIFRA, the Agency will first determine whether there are any significant risk concerns associated with the cancelled product. If there are such risk concerns, the Agency will generally require a risk/benefit analysis before allowing the sale, distribution, or use of existing stocks. If there are no significant risk concerns, the Agency will generally not require a risk/benefit analysis before making an existing stocks determination.

In the case of suspension of pesticide registrations for failure to submit data, FIFRA has explicitly provided the Agency with broad discretion in the area of existing stocks. Section 3(c)(2)(B) provides that the Administrator may make such provisions for the sale and use of existing stocks of a pesticide whose registration is suspended for failure to submit data as EPA "deems appropriate."

As to existing stocks of pesticides that have had their registrations amended, the Agency generally considers sale or distribution of a pesticide bearing a label or containing a formula other than the label or formula currently approved by the Agency to be a violation of FIFRA section 12(a)(1)(B), (C), or (E). The Agency has, however, established regulations (at 40 CFR 152.130) which provide for the continued sale of a product bearing previously approved labeling for certain periods of time depending upon the nature of the amendment. These regulations do not apply to changes in composition. The Agency will treat sale and distribution of products containing a previously accepted formula that is different from the currently accepted formula in the manner described in unit III.C (Amendments of Registration) of this Policy Statement.

III. General Policies Applicable to All Existing Stocks

This Policy Statement contains the general policies that the Agency intends to apply in making determinations concerning the sale or use of existing stocks of pesticides, as defined in unit I (Application) of this statement. In any individual case, the Agency will consider additional factors if appropriate. To the extent that a particular action or cancellation can fit into more than one category discussed below, EPA will generally select the most restrictive existing stocks provision that may apply. Whenever an existing stocks provision is issued, the Agency reserves the right to amend that provision on its own initiative or at the request of any interested person (either by allowing additional time to sell or use stocks or by placing additional restrictions on the sale or use of existing

stocks) if later circumstances warrant. Finally, unless an existing stocks provision stipulates otherwise, any sale or use of existing stocks must be in accordance with the previously approved label and labeling on, or accompanying, the product.

A. Cancelled Pesticides

In determining what existing stocks provision is appropriate with respect to a pesticide whose registration has been cancelled, the Agency generally will base its determination on the total circumstances affecting the cancelled registration. The actual mechanism triggering cancellation will not always be the controlling factor. Instead, the Agency generally will focus on three factors: (1) Whether there are significant potential risks which raise a question as to whether the use of the cancelled pesticide results in unreasonable adverse effects on man or the environment (this category consists primarily of cancellations where the registration is the subject of a notice of intent to cancel issued pursuant to section 6(b) or a special review initiated pursuant to 40 CFR part 154); (2) whether the registrant of the cancelled pesticide has failed to meet an obligation of registration (such as payment of fees under section 4, or submission of data required under section 3(c)(2)(B), 3(c)(7), or (4); and (3) whether the Agency has taken some regulatory position with respect to the cancelled registration (such as issuance of a Registration Standard, Label Improvement Program, or a document describing the reregistration status of a pesticide or active ingredient). Consideration of these factors in a particular case may suggest differing provisions for the sale, distribution, or use of existing stocks. In such situations, the Agency generally will apply the most restrictive existing stocks provision to the cancelled product.

1. *Cancellations where the Agency has identified particular risk concerns.* Whenever a pesticide registration is cancelled, the Agency will determine whether there are significant potential risk concerns associated with the use of the pesticide. If there are such concerns, the Agency generally will make a case-by-case determination as to whether to allow continued distribution, sale, or use of existing stocks of the cancelled pesticide. This likely will be the case whether a product is cancelled by Agency mandate after issuance of a risk-based notice of intent to cancel, whether the product is cancelled because of the registrant's failure to comply with the reregistration requirements of section 4, or whether the cancellation was requested voluntarily by the registrant.

In most cases, the Agency will not permit continued distribution, sale, or use of existing stocks of a cancelled pesticide raising risk concerns unless it can be demonstrated that the social, economic, and environmental benefits associated with such distribution, sale, or use exceed the social, economic, and environmental risks. A risk/benefit analysis for existing stocks purposes is somewhat different from the analysis that is performed by the Agency in determining whether or not to cancel a registration. In making existing stocks determinations, the Agency may consider any or all of the following criteria, to the extent that information is provided or available:

a. The quantity of existing stocks at each level of the market (i.e., in possession of registrants, distributors, retailers, end-users, etc.)

b. The risks resulting from the use of such stocks. The examination of risk may take into account the limited nature of use of existing stocks where relevant (such as where limited use might result in a level of exposure that may not result in much risk). In many cases, however, it may turn out that the risks posed by use of existing stocks will be similar or identical to the risks posed by continued registration (such as, for example, where the risk is primarily an acute risk from single exposure). In assessing the risks posed by use of existing stocks, the Agency will, to the extent possible, also consider the risks posed by likely alternatives (if any).

c. The benefits resulting from the use of such stocks. In considering the benefits of existing stocks, the Agency may consider the short-term problems (if any) in switching to alternatives, including the length of time before which such alternatives could be available to retailers and users and any hardships that might be presented to users before alternatives are available. The consideration of benefits may also include (insofar as it affects existing stocks) the type of analysis of benefits that the Agency performs in its other risk/benefit analyses (i.e., whether alternatives are available, how any such alternatives compare in terms of cost and efficacy, and what the economic effects to the user will be if the cancelled product is unavailable).

d. The dollar amount users and others have already spent on existing stocks (which would be lost if distribution, sale, or use were not permitted).

e. The risks and costs of disposal or alternative disposition of the pesticide if distribution, sale, or use are not permitted. The Agency may assess whether existing stocks could be used for other purposes. If disposal appears likely, the Agency may consider relevant aspects of disposal, including the nature, feasibility, and cost of proper disposal of the cancelled product.

f. The practicality of implementing restrictions on distribution, sale, or use of existing stocks. For instance, it may be that in some circumstances the Agency would allow continued use of a product because the product could not, as a practical matter, be retrieved.

In addition to the factors listed above, the Agency may consider any other information relevant to either the risks posed by, or the benefits resulting from, the sale and use of existing stocks.

In performing a risk/benefit analysis the Agency will consider all information and/or comments from registrants and interested persons regarding existing stocks that are received in response to public documents that the Agency issues in the course of its regulatory process. For example, where an active ingredient is in special review, the Agency will often issue a Preliminary Determination (position document (PD) 2/3) and request public comment on all proposed regulatory actions. Where a registrant's request for voluntary cancellation is received prior to initiation of special review, but while one is under consideration, the Agency will publish a notice in the **Federal Register** acknowledging receipt of the request and may solicit public comments regarding existing stocks provisions.

If registrants or others indicate that there is an interest in the continued sale or use of existing stocks of cancelled pesticides raising risk concerns, and if information is provided to the Agency to support such distribution, sale, or use, the Agency will generally conduct an analysis of the risks and benefits of the distribution, sale, and use of existing stocks. If information is not provided to the Agency or no interest in continued sale, distribution, or use is expressed to the Agency, the Agency will generally not conduct a risk/benefit analysis and will not permit any sale, distribution, or use of existing stocks.

While a risk/benefit analysis will be an important factor in the Agency's determination of whether or not to allow distribution, sale, and use of existing stocks of cancelled pesticides raising risk concerns, the Agency must also determine that further distribution, sale, or use would be consistent with the purposes of FIFRA. There may be unusual circumstances where the Agency will place restrictions on the distribution, sale, and use of existing

stocks beyond those limits otherwise identified in a risk/benefit analysis (e.g., to prevent stockpiling by distributors and users).

In addition, in determining whether distribution, sale, or use of existing stocks would be consistent with the purposes of the Act, the Agency will generally look at the circumstances surrounding the cancellation. If a cancellation is the result of a final Agency action after a special review and a hearing pursuant to section 6(b), the Agency is unlikely to allow continued sale or distribution (and quite possibly, use) of the cancelled pesticide. In such circumstances, registrants, other distributors, and users of the pesticide have had ample notice of the Agency's intentions and sufficient time to take appropriate steps accordingly (such as to procure alternatives, not stockpile large quantities of the pesticide involved, use up stocks already on hand, etc.). On the other hand, where a voluntary cancellation occurs well before the Agency could take final action (i.e., prior to the completion of a special review or in lieu of a hearing under section 6(b)), the Agency may take into consideration the shorter period of notice sellers and users may have had before cancellation, the degree to which the registrant's actions accelerated the removal of the pesticide from the market, and whether the cancellation would have occurred at all without an existing stocks provision.

In a special review situation, the Agency will publish its final determination on whether to allow any sale, distribution, or use of existing stocks of cancelled pesticides, and if so, what conditions to place on such sale, distribution, or use, as part of the Final Determination (PD 4) and any other documents the Agency may issue either with or subsequent to the issuance of the PD 4 (such as notices of intent to cancel, cancellation orders, etc.). If a chemical raising a risk concern is cancelled without issuance of a Notice of Final Determination at the conclusion of a special review, the Agency will include a final existing stocks determination in a cancellation order. Existing stocks determinations contained in cancellation orders will be enforced under section 12(a)(2)(K) or 12(a)(1)(A) of FIFRA.

The Agency may allow the continued sale, distribution, and use of existing stocks of a voluntarily cancelled product raising risk concerns without performing a risk/benefit analysis if similar products with substantial share of the market remain on the market. For example, if a registration raising risk concerns is cancelled voluntarily, the Agency may examine whether the cancelled registration comprises a significant share of the market for the particular active ingredient and use pattern, and the circumstances surrounding the cancellation. If the cancelled registration does not comprise a significant share of the market, a prohibition on existing stocks would not be likely to significantly reduce environmental risks, because similar products would continue to be sold and used. Further, the Agency believes that it makes sense to encourage the early, voluntary cancellation of registrations when risk concerns arise.

If such an early cancellation is truly voluntary (i.e., the registration is not facing imminent cancellation or suspension), the Agency may allow the registrant to sell and distribute existing stocks for 1 year without performing a detailed risk/benefit analysis, and may allow other persons to distribute, sell, and use existing stocks until the stocks are exhausted. The Agency does not believe it should penalize registrants, distributors, or users in cases where a registrant voluntarily cancels a registration before other registrants are compelled to do so. Moreover, it is unlikely that a detailed risk/benefit analysis would yield a different result; so long as similar registrations comprising a predominant share of the market remain, it is unlikely that distribution, sale, or use of existing stocks of a relatively small volume of cancelled product would significantly (if at all) increase the risk of any unreasonable adverse effect on the environment.

On the other hand, if registrations constituting a dominant share of the market are cancelled, and the Agency does not believe that the remaining registrants can fill the previous demand for the product, the Agency will generally not allow continued sale, distribution, or use of existing stocks unless a risk/benefit analysis supporting such sale, distribution, or use is performed.

In cases where the Agency allows continued sale and use of existing stocks of cancelled products raising risk concerns because of the continuing nature of other registrations, it should be understood that the existing stocks allowance may be amended if the conditions concerning the registrations of the remaining products change. (The Agency in all cases reserves the right to amend existing stocks provisions where appropriate.) If other registrations are cancelled or amended during an existing stocks period for a voluntarily cancelled product, and the Agency establishes restrictions on existing stocks of these other registrations or requires relabeling of product made prior to the amendment, the Agency will likely impose similar restrictions on the existing stocks of the earlier voluntarily cancelled registration.

2. *Cancellations where a registrant has failed to comply with an obligation of registration.* This category consists of cancellations where the Agency does not have significant risk concerns with respect to the cancelled pesticide, but where the registrant has failed to respond appropriately to an obligation of registration. In these situations, the Agency has no particular reason to believe that continued distribution, sale, or use of the cancelled product would result in unreasonable adverse effects on the environment.

If a cancellation is not triggered by section 6(b) or 6(e) of FIFRA, the Agency is not required to perform a risk/benefit analysis before determining whether to allow continued sale, distribution, or use of existing stocks. Unless there are significant risk concerns associated with the cancelled pesticide, the Agency generally does not intend to perform such an analysis. Even where a cancellation is triggered by section 6(b) or 6(e), the Agency generally intends to make existing stocks decisions for cancelled products without performing a detailed risk/benefit analysis if there are no significant risk concerns associated with the cancelled pesticide. EPA believes it would be a poor use of resources to perform such an analysis when the Agency is not aware of any risk/benefit considerations that would serve as a basis for cancelling a registration. The Agency believes it highly unlikely that any analysis of risks and benefits of products not raising significant risk concerns would result in prohibition of distribution, sale, or use of existing stocks.

EPA does, however, believe that where registrants of cancelled products have failed to comply with requirements of registration, the nature of noncompliance with the particular obligation involved should be taken into account in determining whether distribution, sale, or use of existing stocks would be consistent with the purposes of FIFRA. Since such noncompliance does not itself raise concerns of unreasonable adverse effects on the environment, EPA will generally allow persons other than the registrant to continue to distribute, sell, or use stocks of cancelled products in this category until such stocks are exhausted (although the Agency may

place some restrictions on sale or use if inventories are not exhausted in a reasonable period of time). In the case of the noncompliant registrant, however, EPA will generally apply the policies set forth below in determining whether to allow continued sale and distribution. Those policies would generally prohibit a registrant from selling or distributing existing stocks more than 1 year from the date the registrant first failed to comply with an obligation of registration.

In any given case, multiple existing stocks dates might apply if a registrant has failed to comply with more than one obligation of registration. In such circumstances, the most restrictive date will generally apply, regardless of the triggering mechanism for cancellation. For example, if a registrant of a cancelled product failed to pay a maintenance fee due on March 1, 1990, and a reregistration fee due on June 1, 1990, the registrant would likely not be allowed to sell or distribute any existing stocks of the product after March 1, 1991 (regardless of whether the product was actually cancelled for failure to pay maintenance fees or reregistration fees).

a. *Failure to pay maintenance fees.* FIFRA section 4(i)(5) requires all registrants to pay annually by March 1st certain maintenance fees for registrations. Failure to pay such fees may result in the cancellation of a registration by order without a hearing (although the cancellation itself does not become effective until the Agency issues the cancellation order). If a maintenance fee is not paid for any given year, the Agency will generally not allow a registrant to continue to sell or distribute existing stock of a cancelled product for more than 1 year after the date when payment to support the cancelled registration was due, regardless of when the actual cancellation occurs. For example, if a registrant fails to pay a maintenance fee due March 1, 1991, to support a particular registration, and the registration is later cancelled, the Agency will generally not allow that registrant to sell or distribute existing stocks of the pesticide after March 1, 1992.

b. *Failure to pay reregistration fees.* FIFRA section 4(i) also requires some registrants to pay a reregistration fee (either in one or two deposits). This fee is to be apportioned among the applicable registrants on the basis of market share information that registrants are required to submit to the Agency. Failure to submit market share information or to pay an appropriate fee can lead to cancellation of a registration by order without a hearing (FIFRA section 4(i)(7)(C)). If a registrant fails to pay the appropriate reregistration fee or submit the required market share information, and an applicable product is later cancelled, a registrant will generally not be allowed to sell or distribute existing stocks of the cancelled product more than 1 year after the date the market share data or fee were due.

c. *Failure to file information during reregistration.* FIFRA section 4 establishes a five-phased process for reregistration activities. If a registrant elects to pursue reregistration, a registrant may have to commit to supply, and then supply, information to the Agency during Phases 2, 3, 4, and 5 (sections 4(d), (e), (f), and (g)). Failure to provide appropriate commitments or information can result in suspension or cancellation of a registration. If a registrant fails to comply fully with any particular phase of reregistration, and an affected product is later cancelled, the Agency will generally not allow a registrant to sell or distribute existing stocks of the cancelled product more than 1 year after the date that a registrant commitment for that particular product was due. For example, if an initial Phase 3 response is due from a registrant on July 24, 1991, the registrant fails to submit an adequate response, and the product is later cancelled, the Agency will generally not allow the registrant to sell existing stocks of the product after July 24, 1992.

Registrants will not be penalized for voluntarily cancelling a product at the beginning of any particular phase of reregistration (i.e., a registrant who cancels as of the commitment date will have a full year from the commitment date to sell or distribute existing stocks). Noncompliance in any phase, however, will generally be treated as if the registrant had requested voluntary cancellation at the beginning of the phase.

Agency policy with respect to existing stocks of suspended products that failed to comply with the requirements of reregistration are discussed later in this document.

d. *Failure to comply with the terms of a conditional registration.* FIFRA section 3(c)(7) allows the Agency to issue registrations before all applicable supporting data are provided. Such registrations, however, are conditional upon submission of the missing data in a timely manner (and upon compliance with any other conditions contained in the registration at the time of issuance). Failure to comply with the terms of a conditional registration can lead to issuance of a notice of intent to cancel under section 6(e).

Where a conditional registration is cancelled (and the Agency has not identified significant risk concerns), the Agency will base its existing stocks decision on the nature of any conditions that have not been met by the registrant. For purposes of this analysis, conditions of registration can be categorized as "general" conditions or "specific" conditions. A general condition, frequently applied to conditional registrations issued pursuant to FIFRA section 3(c)(7)(A) (i.e., registrations issued to products that are identical or substantially similar in chemical composition and use to one or more existing registered products), requires a registrant to submit required data when all other registrants of the similar product are required to do so. Such a general condition neither establishes specific data requirements nor specific dates; the condition is generally triggered by issuance of a data call-in notice. On the other hand, some conditional registrations, particularly those issued pursuant to FIFRA section 3(c)(7)(B) and (C) (i.e., conditional registrations of products containing new chemicals or bearing significant new uses), contain conditions requiring the submission of specified studies or information by specified dates. Where data requirements and submission dates are specifically identified in the conditional registration, such requirements are considered "specific" conditions.

The Agency will treat the failure to comply with a general condition of a conditional registration in the same manner as a failure by a registrant to comply with the terms of any other data call-in. If a registrant of a conditional registration with a general condition to submit data upon request does not thereafter submit data after issuance of a data call-in, and the registration is cancelled for any reason, the registrant would generally be allowed to continue to sell or distribute existing stocks for 1 year after either the day the 90-day response to the data call-in was due or the date at which the registrant ceased to remain in compliance with the terms of the data call-in, whichever date is later. (See unit III.A.3 below).

On the other hand, if a registrant of a conditional registration fails to comply with a specific condition identified at the time the registration was issued, the Agency does not believe it is generally appropriate to allow any sale and use of existing stocks if the registration is cancelled. Accordingly, the Agency does

not anticipate allowing a registrant to sell or distribute existing stocks of cancelled products that were conditionally registered if the registrant fails to demonstrate compliance with any specific requirements set forth in the conditional registration.

3. *Cancellation of products while subject to data call-in notices under section 3(c)(2)(B).* Section 3(c)(2)(B) allows the Agency to require data from registrants. Registrants are required to make an initial response to data call-in notices in 90 days, and thereafter to submit the required data in accordance with the schedule established by the Agency. Failure to respond appropriately can result in the suspension of any registration subject to the data call-in.

Similar to reregistration, data call-in notices require a commitment from a registrant to supply data, and the timely submission of data, to maintain an active registration. Accordingly, the Agency will generally not allow registrants to sell existing stocks of cancelled products more than 1 year after the date a 90-day response to a data call-in notice is due unless the registrant remains in compliance with the terms of the notice. For example, if a registrant commits to submit a 3-year study and the product registration is thereafter cancelled upon request by the registrant pursuant to section 6(f) 9 months after the 90-day response date, sale and distribution of existing stocks by the registrant will be permitted for no more than 3 months (1 year from the 90-day response date). However, if a product subject to a data call-in is cancelled and the registrant can demonstrate full compliance with the requirements of the data call-in up to a certain date, the Agency will likely allow the registrant to continue to sell and distribute existing stocks for 1 year from the date that compliance ended. For example, if the registrant had contracted with a lab to perform a 3-year study, the lab had commenced work, and the registrant instructed the lab to cease work 6 months later, the registrant would generally be allowed to sell and distribute existing stocks of cancelled products for 1 year from the date the lab was asked to cease work on the required study. The Agency will generally allow persons other than the registrant to continue to distribute, sell, or use stocks of cancelled products in this category until such stocks are exhausted (although the Agency may place restrictions if such stocks are not exhausted in a reasonable time).

The preceding discussion assumes that data generated under the data call-in have not disclosed significant potential risks associated with the product. Registrants should be advised that voluntary cancellation of a product during a data call-in response period does not excuse the registrant from compliance with the requirements of FIFRA section 6(a)(2) to report to the Administrator any information regarding unreasonable adverse effects on the environment.

4. *Cancellation of registrations subject to reregistration requirements and label improvement programs.* In the case of a registration subject to a Label Improvement Program (LIP) or determination resulting from decisions made during reregistration, the Agency has determined that the registration of the product may continue, provided that certain changes are made to the terms of registration (generally involving the product label). If a product subject to an LIP or reregistration requirement is cancelled, whether voluntarily or upon action by the Agency (e.g., for failure to pay fees), the Agency will generally not allow a registrant or any other person to sell or distribute existing stocks unless such sale or distribution is consistent with the terms of the LIP or reregistration determination.

For example, if an LIP states that registrants may not sell or distribute a product after January 1, 1992, without a certain label change and states that other persons may not sell or distribute product without the new label after January 1, 1994, and a product subject to the LIP is voluntarily cancelled on July 1, 1991, the registrant of the cancelled product will not be allowed to sell or distribute existing stocks of the cancelled product after January 1, 1992, unless the existing stocks are relabeled to be in compliance with the LIP. Similarly, no other persons would likely be allowed to sell or distribute existing stocks of the cancelled product after January 1, 1994, unless the stocks were in compliance with the terms of the LIP.

5. *Other voluntary cancellations.* If a registrant requests to voluntarily cancel a registration where the Agency has identified no particular risk concerns, the registrant has complied with all applicable conditions of reregistration, conditional registration, and data call-ins, and the registration is not subject to a Registration Standard, Label Improvement Program, or reregistration decision, the Agency will generally permit a registrant to sell or distribute existing stocks for 1 year after the cancellation request was received. Persons other than registrants will generally be allowed to sell, distribute, or use existing stocks until such stocks are exhausted.

B. Suspended Pesticides

FIFRA provides for two different types of suspension. Under section 6(c), EPA may suspend a pesticide registration if use of the pesticide results in an imminent hazard. Under section 3(c)(2)(B), EPA may suspend a registration if a registrant fails to submit required data to the Agency in a timely fashion. Section 4(d)(6) and 4(f)(3) provide for suspensions pursuant to section 3(c)(2)(B) if registrants fail to make timely progress of data development to meet commitments for data submission, tests are not initiated within 1 year after issuance of a Phase 4 data call-in notice, or data are not submitted by the due date.

Where a pesticide is suspended because of an imminent hazard, EPA will apply the policies applicable to cancellations where the Agency has identified significant risk concerns. The Agency is highly unlikely to allow significant sale, distribution, or use of pesticides suspended because of imminent hazard concerns.

Where a pesticide is suspended because of failure to comply with the provisions of a data call-in or reregistration requirement, the Agency will generally not allow the registrant to sell or distribute any existing stocks during the pendency of the suspension. Registrants who sell or distribute a pesticide which has been suspended under FIFRA section 3(c)(2)(B) will be in violation of FIFRA section 12(a)(2)(J). Unlike imminent hazard suspensions, the Agency does not anticipate generally placing restrictions on the sale, distribution, or use of existing stocks by persons other than the registrant where a pesticide is suspended because of failure to comply with the provisions of a data call-in or reregistration requirement unless risk concerns were identified.

C. Amendments of Registrations

The Agency has promulgated regulations (at 40 CFR 152.130) dealing with the sale or distribution of products bearing labeling other than the labeling currently approved by the Agency. Section 152.130(c) of the CFR states that the Agency will "normally" allow registrants to sell products bearing old labeling for 18 months after Agency approval of a revised label and allow others to sell products bearing the old label until all such products are sold, if the product labeling is amended "on the initiative of the registrant." Section 152.130(d) goes on to say that if a

revision is the result of a Registration Standard, Label Improvement Program, or notice concluding a Special Review, the Agency may establish alternate dates after which product sold by a registrant, or sold by others, must bear currently approved labeling.

The regulations do not address the issue of time periods for sale of products bearing a different composition or packaging from that currently approved by the Agency. The Agency believes that if the composition or packaging is required to be changed by the Agency, the policies expressed below concerning label changes should apply. However, if the composition or packaging of a product is changed by a registrant voluntarily, the Agency will generally allow registrants to sell or distribute product for 18 months after the Agency approves the change; other persons will generally be allowed to sell product using the old composition or packaging until all such product is sold.

Changes in labeling made at the behest of the Agency are covered by paragraph (d) rather than paragraph (c) of 40 CFR 152.130. Thus, if label changes are imposed in a document issued during Phase 5 of reregistration (under FIFRA section 4(g)(2)(A)) or if label revisions (or other changes) are in part attributable to concerns that the product may pose unreasonable adverse effects without the change, the Agency may impose appropriate restrictions on the sale or distribution of products not only by the registrant but by others in the distribution chain as well ("channels of trade" dates).

The Agency believes that, although such channels of trade dates may be relatively lengthy, they are necessary to effective enforcement, serving as a form of "closure" on old labeling. In the Agency's enforcement experience, products bearing old labels can be found in channels of trade far longer than foreseen. Besides enforcement difficulties, lack of an absolute cutoff point for needed label changes prolongs inconsistency among similar products, leading to confusion among users as to what label instructions are correct. More importantly, the lack of a channels of trade date creates uncertainty that product labels actually represent current and protective standards. Under FIFRA, the assurance of risk reduction depends heavily on expectations that labeling instructions will be followed. Uncertainty that such compliance is occurring and inconsistency among labels can frustrate efforts by both the Agency and registrants to effect real and consistent risk reduction. Accordingly, in each label change either imposed by the Agency, or attributed in part to risk concerns under review by the Agency, EPA intends to impose both a date for introduction of new labeling into channels of trade (a registrant sale and distribution date), and a date for removing old labeling from channels of trade. Except in the case of labeling changes imposed through Special Review, EPA is unlikely to impose restrictions upon use of product bearing old labeling.

The exact restrictions that the Agency may impose will, of course, depend upon the particular circumstances involved. Nonetheless, the Agency can identify certain principles it generally will apply to label changes directed by the Agency. Label changes directed by the Agency are currently imposed under three specific activities:

1. *The Special Review Process.* Special reviews often culminate in an Agency determination that use of the pesticide without labeling changes would cause unreasonable adverse effects. Also, registrants of pesticides in special review may propose label changes prior to the conclusion of a special review to reduce the risks that are the focus of the review. When label changes are approved in such situations, existing stocks provisions will be determined on a case-by-case basis. In determining what provisions are appropriate, the Agency may consider any or all of the following factors:

a. The nature of the risk posed by the pesticide.

b. The nature of the labeling change required.

c. Whether an amendment to effect the labeling change was submitted in a timely manner.

d. The potential adverse effects associated with continued sale of product not bearing the revised labeling.

e. The volume and location of affected products in the distribution chain.

f. The feasibility, expense, and effectiveness of either requiring relabeling of existing stocks, or of restricting sale and distribution of product not bearing the revised labeling.

2. *Reregistration of current products.* Under FIFRA section 4(g), Phase 5 of the reregistration scheme requires that products containing active ingredients first registered before November 1, 1984, be reregistered. The Agency anticipates that labeling changes (amendments) will likely be required upon issuance of a document stating the Agency's determination of the reregistrability of an active ingredient under FIFRA section 4(g)(2)(A). This Reregistration Eligibility Document (RED) will ask for label changes to be submitted within one of two timeframes—normal or expedited.

In the first instance, the reregistration process envisioned in Phase 5 will normally encompass changes in labeling, composition, or packaging. These changes will be of a more routine nature, or will depend upon the development of product-specific data, such as acute toxicity or efficacy data. Dates for submission of labeling, timeframes for Agency review of labeling changes, and existing stocks provisions will be specified in the RED. Generally, submission of labeling changes will be required 8 months from the date of submission of the RED, and Agency review will be completed 6 months following submission. Registrants will generally be permitted to sell or distribute products bearing old labeling (or composition or packaging) for 1 year after the timeframe established in the RED for Agency approval, and persons other than registrants will generally be permitted to sell or distribute those products for an additional 24 months. Thus, existing stocks dates for sale and distribution of products bearing old labeling will generally be 26 months from the date of issuance of the RED for registrants and 50 months from the date of issuance of the RED for persons other than registrants.

In the second instance, the Agency may require expedited labeling changes if it has significant concerns about the risks of the active ingredient that do not warrant placing it into the Special Review process, but that labeling changes could mitigate. Although EPA believes this situation will be rare, nonetheless the significance of Agency concerns will dictate early submission and review of labeling, and relatively short existing stocks provisions. Existing stocks timeframes will be established case-by-case, depending on the number of products involved, the number of label changes needed, and other factors.

3. *The Label Improvement Program (LIP).* An LIP provides a framework for upgrading labeling that is unconnected with reregistration, and can be initiated at any time that circumstances warrant. The LIP was established to provide a mechanism for the Agency to target a particular labeling problem or a group of products having a common label element and to implement a labeling solution uniformly for all affected products. In that respect it should be viewed as neither active ingredient-specific nor product-specific, but rather "problem-specific." Fundamental to this approach is that the program does not depend upon the development or

interpretation of data, such as is required for reregistration. With such a cross-cutting but focussed approach, the LIP generally endeavors to impose labeling requirements that can be specified exactly or with a minimum of variability. Although labeling may be required to be submitted and reviewed in a LIP, EPA's preferred approach is to obtain agreement via certification that registrants will make the changes. Thus, registrants can rapidly begin implementing the changes in products they distribute and sell. EPA anticipates that any submission of labeling or certification would be required in a comparatively short time after issuance of the LIP. Unless the LIP is a singularly complex one or involves large numbers of products or registrants, submissions of labeling or certifications will normally be required within 3 months. Registrants will generally be allowed to sell or distribute products bearing old labeling for 1 year after issuance of the LIP and persons other than registrants for 3 years after issuance of the LIP.

The Agency acknowledges the impact multiple and frequent required label changes have in escalating registrant costs, potentially disrupting the distribution chain, and creating user confusion. EPA will make every effort to consolidate labeling efforts resulting from reregistration with those that may be under way from LIPs or from parallel regulatory activities.

Interested persons are invited to sumbit written comments on this notice of statement of policy on or before December 26, 1991. Comments must bear a notation indicating the document control number, (OPP-38509). Written comments should be addressed to the Public Docket and Freedom of Information Section, Field Operations Division, at the address given above.

Dated: June 17, 1991.

Douglas D. Campt,

Director, Office of Pesticide Programs.

[FR Doc. 91-14958 Filed 6-25-91; 8:45 am]

BILLING CODE 6560-50-F

EXHIBIT 53

IN THE
UNITED STATES COURT OF APPEALS
FOR THE NINTH CIRCUIT

Natural Resources Defense Council, Inc.,	)	
Petitioner,	)	No. 14-73353 (Consolidated with 15-71207, 15-71213, and 14-73359)
v.	)	
United States Environmental Protection Agency,	)	
Respondent,	)	
Dow AgroSciences, LLC,	)	
Respondent-Intervenor.	)	

RESPONSE TO RESPONDENTS' MOTION FOR VOLUNTARY VACATUR AND REMAND

Intervenor Dow AgroSciences, LLC (Dow) hereby responds to respondents' "Motion for Voluntary Vacatur and Remand" [Dkt. 121-1]. In support of this response, Dow states as follows:

1. Respondents have filed a "Dr. Jekyll & Mr. Hyde" motion. Part of the motion is entirely uncontroversial—the request for a remand so that the Environmental Protection Agency (EPA) may analyze new

information that may bear on the pesticide registration at issue here. But part of the motion is entirely novel and unlawful—the agency's request for this Court, without addressing the merits, summarily to vacate that registration.

2. Dow believes that the new information cited by respondents has no impact on the validity of the existing registration. But Dow has absolutely no problem with the requested remand to allow the agency to review that information, and hereby consents to such relief. Dow does not, and cannot, however, agree to the requested vacatur, which would circumvent a comprehensive regulatory scheme that specifies the agency's powers and duties (and a registrant's rights) with respect to an existing pesticide registration. Accordingly, this Court should limit its relief to a remand for the agency to exercise primary jurisdiction to review the new information and decide what additional steps, if any, are warranted. In the meantime, Dow will agree to stop sales of Enlist Duo, and to work out an appropriate agreement to that effect with the agency.

3. The premise of the motion is correct: "Agency decisions are not carved in stone," and thus "an agency must consider the wisdom of

its policy on a continuing basis,' for example, 'in response to changed circumstances.'" Mot. 6 (quoting *National Cable & Telecomms. Ass'n v. Brand X Internet Servs.*, 545 U.S. 967, 981 (2005)). That is why it is appropriate for a court to remand a case to an agency where, as here, the agency requests an opportunity to review an earlier decision in light of new information. *See, e.g.*, *California Communities Against Toxics v. EPA*, 688 F.3d 989, 992 (9th Cir. 2012).

4. But an agency's desire for an opportunity to review an earlier decision in light of new information provides no basis for either the agency or a court summarily to annul that decision. To the contrary, the Federal Insecticide, Fungicide, and Rodenticide Act (FIFRA), 7 U.S.C. § 136 *et seq.*, and agency regulations promulgated thereunder establish an "elaborate" and "comprehensive" scheme governing pesticide registration, which "grants enforcement authority to the EPA." *Headwaters, Inc. v. Talent Irrigation Dist.*, 243 F.3d 526, 530 (9th Cir. 2001); *Love v. Thomas*, 858 F.2d 1347, 1350 (9th Cir. 1988).

5. Under that scheme, a registrant, like Dow, has a legally cognizable property interest in a pesticide registration, which (as

respondents concede) "is a license that establishes the terms and conditions under which a pesticide may be lawfully sold, distributed, and used." Resps.' Mot. 3; *see also Reckitt Benckiser Inc. v. EPA*, 613 F.3d 1131, 1133 (D.C. Cir. 2010) ("A FIFRA registration is a product-specific license describing the terms and conditions under which the product can be legally distributed, sold, and used.") (citing 7 U.S.C. § 136a(a), (c)-(e)); *Center for Biological Diversity v. EPA*, No. 11-cv-293, 2013 WL 1729573, at *6-7 (N.D. Cal. 2013) ("The applicants are owners of the pesticide registrations, and thus have property and financial interests in the registrations."). Needless to say, that property interest cannot be annulled without due process of law. *See, e.g., Bell v. Burson*, 402 U.S. 535, 539 (1971).

6. Congress recognized as much when it enacted FIFRA. That comprehensive regulatory scheme creates a detailed procedural mechanism for the agency to cancel or suspend an existing pesticide registration. In particular, FIFRA Section 6(b), 7 U.S.C. § 136d(b), specifies:

> If it appears to the Administrator that a pesticide or its labeling or other material required to be submitted does not comply with the provisions of this subchapter ... the

> Administrator may issue a notice of the Administrator's intent either —
>
> **(1)** to cancel the registration or to change its classification together with the reasons (including the factual basis) for the Administrator's action, or
>
> **(2)** to hold a hearing to determine whether or not its registration should be canceled or its classification changed.

Before the Administrator may cancel a registration, however, she must provide notice to the registrant and the public. *See id.* In addition, at least 60 days prior to that notice, she must provide notice of the proposed cancellation to the Secretary of Agriculture along with an analysis of the impact of the proposed cancellation on the agricultural economy. *See id.* She must also provide the registrant and other interested parties with a public administrative hearing. *See id.* Moreover, "[i]n taking any final action under this subsection, the Administrator shall consider restricting a pesticide's use or uses as an alternative to cancellation … and shall include among those factors to be taken into account the impact of such final action on production and prices of agricultural commodities, retail food prices, and otherwise on the agricultural economy, and the Administrator shall publish in the Federal Register an analysis of such impact." *Id.* Once all of the

agency's obligations under FIFRA's cancellation provisions have been met—and *only* once all of those obligations have been met—the Secretary may issue a final order of cancellation, which in turn is subject to judicial review to protect the registrant's property interest in the registration. *See id.* § 136n(b).

7. The regulatory scheme also provides for suspension as an alternative to cancellation of a registration. Thus, "[i]f the Administrator determines that action is necessary to prevent an imminent hazard during the time required for cancellation or change in classification proceedings, the Administrator may, by order, suspend the registration of the pesticide immediately." 7 U.S.C. § 136d(c)(1). But there too, Congress carefully protected the rights of affected registrants by including key procedural protections in the suspension process: except in the event of an emergency, "no order of suspension may be issued under this subsection unless the Administrator has issued, or at the same time issues, a notice of intention to cancel the registration or change the classification of the pesticide ....." *Id.* The Administrator also must notify the registrant prior to any suspension, and such notice "shall include findings pertaining to the question of

'imminent hazard.'" *Id.* The registrant, in turn, "shall then have an opportunity ... for an expedited hearing before the Administrator on the question of whether an imminent hazard exists." *Id.* Once all of the agency's obligations under FIFRA's suspension provisions have been met—and *only* once all of those obligations have been met—the Secretary may issue a final order of suspension, which again is subject to judicial review to protect the registrant's property interest in the registration. *See id.* § 136d(c)(4).

8. By asking this Court summarily to vacate the existing Enlist Duo registration, EPA is trying to short-circuit this regulatory scheme and abdicate the responsibilities Congress assigned to the agency. There is no basis in law or logic for this Court to vacate the registration: all that has happened is that EPA has informed this Court that it "is in receipt of new information regarding *potential* synergistic effects between" Enlist Duo's active ingredients. Mot. 2 (emphasis added). While that new information may warrant "a voluntary remand in order to reconsider the Enlist Duo registration in light of the new information," it provides no basis for a "vacatur of the registration." *Id.*

9. EPA argues that it "cannot be sure, without a full analysis of the new information, that the current registration does not cause unreasonable effects to the environment, which is a requirement of the registration standard under FIFRA." *Id.* But that is, at most, a reason for the agency to follow the established regulatory process for reviewing that information and taking whatever steps may be appropriate under the comprehensive regulatory regime. It is not a reason for EPA to bypass that regime altogether by asking this Court summarily to vacate the existing registration.

10. The cases cited by EPA in support of its request for vacatur are entirely inapposite. For example, EPA declares as a general matter that "[i]n environmental cases, to decide whether remand with or without vacatur is the appropriate remedy, a factor this Court considers is the extent to which vacatur would cause or prevent possible environmental harm." Mot. 8 (citing *Pollinator Stewardship Council v. EPA*, __ F.3d __, 2015 WL 7003600, at *12 (9th Cir. Nov. 12, 2015)). But in that case, this Court had reviewed the disputed agency action on the merits and concluded that it was contrary to law, *see Pollinator Stewardship Council*, 2015 WL 7003600, at *7-11, and thus was

authorized to vacate the agency action, *see id.* at *12. Here, in sharp contrast, this Court has never reviewed the disputed agency action on the merits and determined that it is unlawful. In light of Dow's legally protected interest in the matter, there is no basis for this Court summarily to vacate the agency's unreviewed registration decision just because the agency has so requested.

11. Indeed, this case is closely analogous to *Reckitt Benckiser*. There, as a result of a registrant's alleged failure to comply with certain risk mitigation measures imposed by EPA, the agency threatened to institute enforcement proceedings for alleged misbranding. The registrant, citing the procedural safeguards of FIFRA Section 6 cancellation proceedings, sought declaratory and injunctive relief to bar EPA from thereby circumventing the statutory cancellation regime. The court agreed, noting that Section 6 "establishes a detailed, multi-step process that EPA *must* follow when it wants to cancel or suspend a registration." *Reckitt Benckiser, Inc. v. Jackson*, 762 F. Supp. 2d 34, 42 (D.D.C. 2011) (emphasis in original); *see also id.* ("'A pesticide product remains registered until EPA or the registrant cancels it pursuant to Section 6.'") (quoting *Reckitt Benckiser*, 613 F.3d at 1133)). As the court

explained, "[t]he process imposes certain obligations on EPA before it may issue a notice of intent to cancel or a notice of intent to hold a hearing on cancellation, and it entitles the registrant to notice, a hearing and other procedural protections before EPA can make a final decision on cancellation." *Id.* at 43. To allow EPA to seek to nullify a registration outside that process—either through a misbranding enforcement action or a request for "voluntary vacatur"—would allow the agency to "'bypass[] cancellation proceedings' and 'effect[ively] cancel[] the registrations without following the regulatory procedures provided in Section 6.'" *Id.* at 43 (quoting *Reckitt Benckiser*, 613 F.3d at 1133)); *see also id.* ("To interpret FIFRA to give EPA that authority not only renders Section 6 superfluous; it also allows EPA to avoid the rigorous cancellation process Congress provided for in the statute.").

12. In short, EPA is improperly trying to abdicate the responsibility that Congress vested in the agency for cancelling or suspending pesticide registrations, and to nullify the corresponding procedural protections for Dow. Accordingly, this Court should limit the relief here to a remand for the agency to review the new information and decide what additional steps, if any, are warranted. In the

meantime, Dow will agree to stop sales of Enlist Duo, and to work out an appropriate agreement to that effect with the agency.

CONCLUSION

For the foregoing reasons, this Court should grant the motion to remand, but deny the motion to vacate.

December 7, 2015

Respectfully submitted,

/s/ *Christopher Landau*

Christopher Landau, P.C.
KIRKLAND & ELLIS LLP
655 Fifteenth Street, N.W.
Washington, DC 20005
(202) 879-5000
clandau@kirkland.com

Michael P. Foradas
KIRKLAND & ELLIS LLP
300 North LaSalle Street
Chicago, IL 60654
(312) 862-2000
mforadas@kirkland.com

Stanley H. Abramson
Donald C. McLean
ARENT FOX LLP
1717 K Street, N.W.
Washington, DC 20006
(202) 857-6000
stanley.abramson@arentfox.com
donald.mclean@arentfox.com

David B. Weinberg
WILEY REIN LLP
1776 K Street, N.W.
Washington, DC 20006
(202) 719-7000
dweinberg@wileyrein.com

Counsel for Intervenor

CERTIFICATE OF SERVICE

I, Christopher Landau, P.C., hereby certify that I served the foregoing document by ECF on this 7th day of December 2015, which will result in service on all counsel of record.

/s/ *Christopher Landau*

Christopher Landau, P.C.

EXHIBIT 54

FILED

JAN 25 2016

MOLLY C. DWYER, CLERK
U.S. COURT OF APPEALS

UNITED STATES COURT OF APPEALS

FOR THE NINTH CIRCUIT

NATURAL RESOURCES DEFENSE COUNCIL, Petitioner, v. U.S. ENVIRONMENTAL PROTECTION AGENCY, Respondent, DOW AGROSCIENCES LLC, Respondent-Intervenor.	Nos. 14-73353, 15-71213 ORDER
CENTER FOR FOOD SAFETY; et al., Petitioners, v. U.S. ENVIRONMENTAL PROTECTION AGENCY and GINA MCCARTHY, in her official capacity as Administrator, Respondents, DOW AGROSCIENCES LLC, Respondent-Intervenor.	Nos. 14-73359, 15-71207

AT/MOATT

Before: GOODWIN, TALLMAN, and NGUYEN, Circuit Judges.

The motion of Dow Agrosciences LLC to strike the Natural Resources Defense Council's December 17, 2015 reply is denied.

The Environmental Protection Agency's unopposed motion for remand is granted.

The motion for voluntary vacatur of the registration of Enlist Duo is denied without prejudice to the rights of either party to litigate that question before the agency.

REMANDED.

EXHIBIT 55

UNITED STATES
ENVIRONMENTAL PROTECTION AGENCY

BEFORE THE ADMINISTRATOR

RECEIVED BY OALJ
2013 MAY -6 PM 1:15

In the Matter of:	)	
	)	
Reckitt Benckiser LLC, et al.	)	FIFRA Docket No. 661
	)	
EPA Reg. Nos. 3282-3, 3282-4, 3282-9, 3282-15, 3282-65, 3282-66, 3282-74, 3282-81, 3282-85, 3282-86, 3282-87, and 3282-88	)	

RESPONDENT'S CONDITIONAL OPPOSITION TO CROPLIFE AMERICA'S MOTION TO FILE AN AMICUS CURIAE BRIEF REGARDING EXISTING STOCKS OF CANCELLED PRODUCTS

On April 26, 2013, CropLife America ("CropLife"), as amicus curiae, filed a brief in support of the April 12, 2013, Reckitt Benckiser LLC ("Reckitt") Motion for an Expedited Determination That EPA's Existing Stocks Decision Is Within The Scope of The Hearing ("Reckitt's Motion"). The Assistant Administrator for Chemical Safety and Pollution Prevention ("Respondent") consented to the filing of CropLife's amicus brief conditioned upon Respondent being allowed the opportunity to reply. It is unclear whether the rules governing this proceeding, 40 C.F.R part 164, allow parties to respond to amicus briefs as a matter of right. Accordingly, Respondent files herewith its reply to CropLife's amicus brief, or, in the alternative, Respondent's opposition to CropLife's motion for leave to file an amicus brief.

I. CropLife's Substantive Contentions Are Mistaken And Provide No Support For Reckitt's Motion

CropLife does not address the cases cited in the Notice of Intent To Cancel giving rise to this proceeding that hold that the disposition of existing stocks of cancelled products are not required to be issues for a cancellation proceeding (78 Fed. Reg. 8123, 8126), but instead presents two legislative history arguments in support of its contention "that Congress in 1972 intended to include existing stocks issues within the scope of section 6(b) cancellation hearings." CropLife Brief at 8. Neither has merit.

First, CropLife identifies a letter from an EPA Assistant Administrator to a member of the Senate Committee on Agriculture and Forestry, attached to a report of that Committee regarding proposed amendments to the Federal Insecticide, Fungicide and Rodenticide Act ("FIFRA"), and extracts from it the following nugget:

> I believe our present authority under [a House bill that did not include the existing stocks language ultimately included in FIFRA section 6(a)(1)] is sufficiently flexible to permit an orderly phase-out where farmers have relied on a pesticide for use during an upcoming growing season. It is open to registrants and user groups to raise at the hearing any question bearing on the benefits of using a product. Any showing of need for a pesticide during an upcoming season would be relevant and the statute would permit us to issue an order that would result in a label use for a given season or period of time or indeed a certain geographical location. It would be our policy to invoke this flexibility on a showing by affected groups that the particular chemical were needed for the growing season.

S. Rep. No. 92-838 at 13-14 (June 7, 1972).

CropLife represents this as evidence of a Congressional intent that the disposition of existing stocks should be decided in section 6(b) cancellation proceedings, but the text says nothing of the sort. The purpose of a FIFRA section 6(b) cancellation proceeding is to determine whether "a pesticide or its labeling or other material required to be submitted does not comply

with the provisions of this Act or, when used in accordance with widespread and commonly recognized practice, generally causes unreasonable adverse effects on the environment, [such that] the Administrator [should] cancel its registration or change its classification..." *Id.* The pesticide product is cancelled without a hearing if no person files a timely request for hearing and states particular objections. FIFRA section 6(b); 40 C.F.R. § 164.22. Therefore, persons opposing cancellation necessarily must present evidence of the product's benefits in their efforts to demonstrate that the product satisfies the risk-benefit balancing required by FIFRA. So it is wholly unremarkable to observe that "[i]t is open to registrants and user groups to raise at the hearing any question bearing on the benefits of using a product" (S. Rep. at 13-14) as they must do so in order to oppose cancellation. But it is only the benefits *of continued registration* that are relevant to the question of whether the pesticide registration may continue or must be cancelled; the benefits and risks associated with whatever post-cancellation use that might subsequently be allowed are not germane to the purpose of the proceeding. Nevertheless, testimony at the hearing introduced for the purpose of showing the need for continued registration (the decision before the Administrative Law Judge) may also be relevant to the separate and independent decision of the Assistant Administrator for Chemical Safety and Pollution Prevention concerning whether, and under what conditions, to allow the sale, distribution or use of existing stocks of cancelled product. Hence "[a]ny showing of need for a pesticide during an upcoming season would be relevant and the statute would permit us to issue an order [concerning disposition of existing stocks of cancelled product]." *Id.* Finally, the circumstances-based decision rubric of the Agency's existing stocks policy (Existing Stocks of Pesticide Products; Statement of Policy, 56 Fed. Reg. 29362 (June 26, 1991)) stands as evidence of the continuing validity of the 1972 assertion that "[i]t would be our policy to invoke this flexibility [regarding disposition of existing

stocks] on a showing by affected groups that the particular chemical were needed for the growing season." S. Rep. at 14.[1]

CropLife's second contention is that it would be "ironic" for Congress to have established a broader scope for cancellation hearings pursuant to FIFRA section 6(e) and suspension hearings pursuant to FIFRA section 3(c)(2)(B) than it did for section 6(b) cancellation hearings. Respondent finds that Congressional choice eminently reasonable. Unlike the d-CON rodenticides at issue in this proceeding, products cancelled pursuant to FIFRA section 6(e) or suspended pursuant to FIFRA section 3(c)(2)(B) are generally not expected to pose unreasonable risks to health or the environment.[2] A section 6(e) cancellation or section

---

[1] For example, regarding cancellations where the Agency has identified particular risk concerns, the Existing Stocks Policy calls for consideration of: (a) the quantity of existing stocks at each level of the market, (b) the risks resulting from the use of such stocks, (c) the benefits resulting from the use of such stocks, (d) the dollar amount users and others have already spent on existing stocks (which would be lost if distribution, sale, or use were not permitted), (e) the risks and costs of disposal or alternative disposition of the pesticide, and (f) the practicality of implementing restrictions on distribution, sale, or use of existing stocks. 56 Fed. Reg. at 29364.

[2] Section 6(e) applies only to conditional registrations (often referred to as "me-too" or "follow-on" registrations) issued pursuant to section 3(c)(7), where a person is granted a registration for a product "substantially similar" to another product already on the market, conditioned upon the new registrant satisfying certain data requirements in the future. If that new registrant subsequently fails to satisfy those outstanding data requirements, the conditional registration is subject to cancellation under Section 6(e), where "[t]he only matters for resolution at that hearing shall be whether the registrant has initiated and pursued appropriate action to comply with the condition or conditions within the time provided or whether the condition or conditions have been satisfied within the time provided, and whether the Administrator's determination with respect to the disposition of existing stocks is consistent with this Act." Thus a section 6(e) cancellation is about the *registrant's* failure to meet its obligations, and not about a problem with *the pesticide product itself*. A pesticide cancelled pursuant to section 6(e) is not being cancelled on account of risks, and, despite cancellation, remains "a pesticide and proposed use [that] are identical or substantially similar to [a] currently registered pesticide and use thereof, or differ only in ways that would not significantly increase the risk of unreasonable adverse effects on the environment..." Section 3(c)(7)(A).

Similarly, suspensions pursuant to section 3(c)(2)(B) are on account to the *registrant's* failure to comply with new data requirements imposed after registration, rather than any known problem with *the pesticide product itself*. Section 3(c)(2)(B)(iv) likewise provides that "[t]he only matters for resolution at that hearing shall be whether the registrant has failed to take the action that served as the basis for the notice of intent to suspend the registration of the pesticide for which additional data is required, and whether the Administrator's determination with respect to the disposition of existing stocks is consistent with this Act." Thus Congress expressly provided that the disposition of existing stocks would be within the scopes of the two adverse registration actions that are not directly related to the risks associated with the product itself.

In contrast, the provisions governing risk-based cancellations and suspensions (sections 6(b) and 6(c)) say nothing about disposition of existing stocks. The Agency's authority over existing stocks of products cancelled or suspended pursuant to sections 6(b) and 6(c) comes instead from section 6(a)(1): "The Administrator may permit the continued sale and use of existing stocks of a pesticide whose registration is suspended or canceled under this section, or section 3 or 4, to such extent, under such conditions, and for such uses as the Administrator determines that such sale or use is not inconsistent with the purposes of this Act."

3(c)(2)(B) suspension does not result in an adjudicated determination that a product poses unreasonable risks to health or the environment. Instead, section 6(e) cancellations and section 3(c)(2)(B) suspensions result from a registrant's failure to generate data or acquire rights to use the data of others, for products that in most cases are very much like other products that will remain registered. In contrast, products cancelled pursuant to section 6(b) have been determined to pose unreasonable risks to man or the environment that require that they be removed from commerce. Inasmuch as a pesticide product cancelled pursuant to section 6(e) or suspended pursuant to section 3(c)(2)(B) would not be presumed to pose any unreasonable risk, it seems reasonable that Congress would provide different treatment for existing stocks of such products and for existing stocks of products cancelled owing to unreasonable risks pursuant to section 6(b).

In summation, CropLife's substantive contentions are mistaken and provide no support for Reckitt's Motion. Respondent has shown that the plain language of the legislative history CropLife cites does not support its contention that Congress intended that the question of existing stocks should be at issue in cancellation proceedings. The cited text is instead fully harmonious with Respondent's position that FIFRA does not create any right to hearing on the disposition of existing stocks of product cancelled pursuant to section 6(b). Respondent has shown that Congress's express inclusion of existing stocks in the scope of section 6(e) cancellation proceedings and section 3(c)(2)(B) suspension proceedings does not imply that that existing stocks must therefore be within the scope of section 6(b) cancellation proceedings. The fundamental difference between the risks associated with products cancelled on account of unreasonable risk (section 6(b) cancellations) and products cancelled or suspended on account of registrants failing to meet data requirements (section 6(e) cancellations and section 3(c)(2)(B)

suspensions) fully warrants a statutory scheme where (1) existing stocks of products cancelled owing to unreasonable risk will not be allowed to be distributed or sold, except pursuant to the Administrator's discretionary authority pursuant to section 6(b)(1), and (2) the disposition of existing stocks of products cancelled or suspended for procedural reasons unrelated to risk will be determined by an Administrative Law Judge, or the Environmental Appeals Board on appeal. Accordingly, CropLife's substantive contentions should be disregarded and Reckitt's Motion should be denied.

II. In The Alternative, Respondent Opposes CropLife's Motion For Leave To File An Amicus Brief

Respondent consented to the filing of CropLife's amicus brief conditioned upon Respondent being allowed the opportunity to reply, however, such an agreement does not bind the Administrative Law Judge. The procedural rules governing this proceeding, 40 C.F.R. part 164, do not expressly provide parties a right to respond to briefs of adverse amici, however, § 164.31 does require that "an amicus curiae shall file its brief within the time allowed the party whose position the brief will support." It is reasonable to presume that part of the rationale for that provision was to allow a party to respond to both opposing briefs simultaneously, and to infer from it a general right to respond to amicus briefs. Although it is not directly applicable to this proceeding, the fairness of allowing parties to respond to amicus briefs is acknowledged in 40 C.F.R. § 22.11(b): "Any party to the proceeding may file a response to a non-party brief within 15 days after service of the non-party brief." It would not be fair if an amicus were allowed to make arguments on behalf of one party, and the opposing party were not permitted the opportunity to respond, as this would give amicii a power beyond those enjoyed by full

parties to the proceeding.[3] Accordingly, in the event that the Administrative Law Judge determines that part 164 does not allow the response presented above, Respondent opposes CropLife's motion for leave to file an amicus brief.

Respectfully submitted,

5/6/2013
Date

Robert G. Perlis
Scott B. Garrison
David N. Berol
U.S. Environmental Protection Agency
Office of General Counsel (2333A)
1200 Pennsylvania Ave., N.W.
Washington, DC 20460
perlis.robert@epa.gov; 202-564-5636
garrison.scott@epa.gov ; 202-564-4047
berol.david@epa.gov; 202-564-6873

[3] Respondent's position here differs from its position in *Respondent's Response To Motion For Leave To File A Reply Concerning Reckitt's Motion For An Expedited Determination That EPA's Existing Stocks Decision Is Within The Scope Of The Hearing* in two major respects. First, Respondent here seeks to establish the rights of full parties to respond to amicus briefs. Second, Respondent opposed Reckitt's request for leave to file a reply because Reckitt was a moving party that simply failed to write the brief it wished it had written the first time, whereas here, Respondent was not the movant and has not had a first opportunity to address Amicus' arguments.

CERTIFICATE OF SERVICE

I hereby certify that the original and one copy of *Respondent's Conditional Opposition To Croplife America's Motion To File An Amicus Curiae Brief Regarding Existing Stocks Of Cancelled Products* were filed with the Headquarters Hearing Clerk, and a copy hand delivered to the office of:

The Honorable Susan L. Biro
U.S. Environmental Protection Agency
Office of Administrative Law Judges
1300 Pennsylvania Ave., N.W.
Washington, DC 20460

I further certify that true and correct copies were sent by first class mail and e-mail to:

Lawrence E. Culleen
Jeremy C. Karpatkin
Ronald A. Schechter
Arnold & Porter LLP
555 Twelfth Street, N.W.
Washington, D.C. 20004
Lawrence.Culleen@aporter.com
Jeremy.Karpatkin@aporter.com
Ronald.Schechter@aporter.com

Mark K. Franks
Greater Cincinnati Northern Kentucky
Apartment Association
7265 Kenwood Road, Suite 100
Cincinnati, OH 45236
Mark @gcnkaa.org

Gale Lively
Louisville Apartment Association
7400 South Park Place, Suite 1
Louisville, KY 40222
Info@laaky.com

Bob Taylor
Do It Best Corp.
P.O. Box 868
Fort Wayne, IN 46801-0868
Mail@doitbest.com

John D. Connor, Jr.
McKenna Long & Aldridge LLP
1900 K Street, N.W.
Washington, DC 20006
jconnerjr@mckennalong.com

Gregory C. Loarie
Irene V. Gutierrez
Earthjustice
50 California St., Suite 500
San Francisco, CA 94111
gloarie@earthjustice.org
igutuerrez@earthjustice.org

Dimple Chaudhary
Aaron Colangelo
Nicholas Morales
Natural Resources Defense Council
1152 15th St. NW, Suite 300
Washington DC 20005
dchaudhary@nrdc.org
acolangelo@nrdc.org
nmorales@nrdc.org

5/6/2013
Date

Scott B Garrison

Scott B. Garrison
U.S. Environmental Protection Agency
Office of General Counsel (2333A)
1200 Pennsylvania Ave., N.W.
Washington, DC 20460

CERTIFICATE OF SERVICE

I HEREBY CERTIFY that on this 11th day of April, 2016, a true and correct copy of the foregoing Motion For An Accelerated Decision By Bayer CropScience LP And Nichino America, Inc. was filed electronically using the EPA OALJ e-filing system; and served in the following manner to the below addressees:

Electronically Using EPA OALJ e-filing system:

Sybil Anderson, Headquarters Hearing Clerk
Office of Administrative Law Judges
U.S. Environmental Protection Agency
Ronald Reagan Building, Room M1200
1300 Pennsylvania Avenue, N.W.
Washington, DC 20004
202-564-6261
Anderson.sybil@epa.gov

By Email:

Michael B. Wright, Staff Attorney
Ryan Yaeger, Staff Attorney
Office of Administrative Law Judges
USEPA Headquarters
William Jefferson Clinton Building
1200 Pennsylvania Avenue, N. W.
Mail Code: 1900R
Washington, DC 20460
Wright.michaelb@Epa.gov
Yaeger.ryan@Epa.gov

Ariadne Goerke
Robert G. Perlis
Scott Garrison
Pesticides and Toxic Substances Law Office
Office of General Counsel (Mail Code 2333A)
U.S. Environmental Protection Agency
WJC North 7318B
1200 Pennsylvania, Avenue, N.W.
Washington, DC 20460
goerke.ariadne@epa.gov
Perlis.Robert@epa.gov
garrison.scott@epa.gov

Counsel For Respondent

Katherine M. Fowler
Sarah B. Mangelsdorf
One South Memorial Drive, 12th Floor
Saint Louis, MO 63102
kfowler@foxgalvin.com
smangelsdorf@foxgalvin.com

Counsel for Amicus Curiae Growers

Kirsten L. Nathanson
Warren U. Lehrenbaum
Jared B. Fish
Preetha Chakrabarti
CROWEL &MORING LLP
1001 Pennsylvania Ave., N.W.
Washington, DC 20004
knathanson@crowell.com
wlehrenbaum@crowell.com
jfish@crowell.com
pchakrabarti@crowell.com

Counsel for *Amicus Curiae* CropLife America

David A. Barker