**U.S. Environmental Protection Agency**
**Architect and Engineering Services Contract**

CONTRACT NO. 68-W-98-228
WORK ASSIGNMENT NO. 107-TA-TA-10W2

## Contract Documents

**for the construction of the**

# Wyckoff Replacement Groundwater Treatment Plant

## June 2005

**Volume 1**

**Bidding Requirements**

**Contract Forms**

**Conditions of the Contract**

**Specifications**

**Divisions 1 – 10**

**Wyckoff/Eagle Harbor Superfund Site**
**Bainbridge Island, Washington**

**CH2MHILL**

U.S. ENVIRONMENTAL PROTECTION AGENCY
ARCHITECT AND ENGINEERING SERVICES CONTRACT
WYCKOFF/EAGLE HARBOR SUPERFUND SITE

BAINBRIDGE ISLAND, WASHINGTON

# BIDDING REQUIREMENTS
# AND
# CONTRACT DOCUMENTS

for the construction of the

## WYCKOFF REPLACEMENT GROUNDWATER TREATMENT PLANT

Contract No. 68-W-98-228
Work Assignment No. 107-TA-TA-10W2

****

KENNETH T. SCHEFFLER
STATE OF WASHINGTON
25603
REGISTERED
PROFESSIONAL ENGINEER

EXPIRES 5/17/06

****

CH2M HILL

Corvallis, Oregon

June 2005

Project No. 316783.FD.01

Copy No._____

Pages

# CONTENTS

## VOLUME 1

SPECIFICATIONS

DIVISION 1—GENERAL REQUIREMENTS


| | | |
|---|---|---|
| | Geotechnical Design | 1- 39 |
| 01010 | Summary of Work | 1- 1 |
| 01025 | Measurement and Payment | 1- 5 |
| 01040 | Coordination | 1- 5 |
| 01063 | Health and Safety | 1- 9 |
| 01092 | Abbreviations | 1- 5 |
| 01200 | Project Meetings | 1- 4 |
| 01300 | Submittals | 1- 8 |
| | Supplement: | |
| | Transmittal of Contractor's Submittal Form | 1- 1 |
| 01310 | Progress Schedules | 1- 7 |
| 01430 | Operation and Maintenance Data | 1- 6 |
| | Supplement: | |
| | Maintenance Summary Form | 1- 2 |
| 01500 | Construction Facilities and Temporary Controls | 1- 10 |
| 01570 | Erosion and Sediment Control | 1- 8 |
| 01600 | Material and Equipment | 1- 7 |
| 01640 | Manufacturers' Services | 1- 4 |
| | Supplement: | |
| | Manufacturer's Certificate of Proper Installation | 1- 1 |
| 01645 | Owner-Furnished Products | 1- 5 |
| 01780 | Contract Closeout | 1- 4 |
| 01810 | Equipment Testing and Facility Startup | 1- 7 |
| | Supplement: | |
| | Unit Process Startup Form | 1- 1 |
| | Facility Performance Demonstration/Certification Form | 1- 1 |


DIVISION 2—SITE CONSTRUCTION


| | | |
|---|---|---|
| 02080 | Fire Hydrants | 1- 4 |
| 02200 | Site Preparation | 1- 3 |
| 02220 | Demolition | 1- 2 |
| 02260 | Excavation Support and Protection | 1- 2 |
| 02315 | Excavation | 1- 4 |

Pages

02316 Fill and Backfill ..... 1- 11
02319 Subgrade Preparation ..... 1- 3
02320 Trench Backfill ..... 1- 10
02371 Geotextiles ..... 1- 5
02710 Untreated Aggregate Base Course and Gravel Surfacing ..... 1- 4
02771 Concrete Sidewalks ..... 1- 3
02821 Chain Link Fences and Gates ..... 1- 7

DIVISION 3—CONCRETE

03100 Concrete Formwork ..... 1- 5
03210 Reinforcing Steel ..... 1- 5
03215 Doweling for Concrete ..... 1- 6
03251 Concrete Joints ..... 1- 6
03300 Cast-in-Place Concrete ..... 1- 27
03370 Concrete Curing ..... 1- 5
03600 Grout ..... 1- 6
Supplement:
24-Hour Evaluation of Nonshrink Grout Test Form and
Grout Testing Procedures ..... 1- 3
03720 Vertical and Overhead Concrete Surface Repair Systems ..... 1- 11
03722 Horizontal Concrete Surface Repair Systems ..... 1- 9
03740 Concrete Repair Crack Injection ..... 1- 10

DIVISION 4—MASONRY (NOT USED)

DIVISION 5—METALS

05050 Welding ..... 1- 5
Supplement:
Welding and Nondestructive Testing Table ..... 1- 1
05410 Load Bearing Metal Framing Systems ..... 1- 7
05500 Metal Fabrications and Castings ..... 1- 18
05520 Handrails ..... 1- 14
05530 Metal Grating ..... 1- 8

DIVISION 6—WOOD AND PLASTICS

06000 Carpentry ..... 1- 6
06500 Fiberglass Reinforced Plastic Products and Fabrications ..... 1- 11

Pages

DIVISION 7—THERMAL AND MOISTURE PROTECTION

07210 Building Insulation ..... 1- 2
07840 Firestopping ..... 1- 5
07900 Joint Sealants ..... 1- 6

DIVISION 8—DOORS AND WINDOWS

08001 Door and Hardware Schedule ..... 1- 1
Supplements:
Door and Hardware Schedule ..... 1- 2
Door and Frame Types ..... 1- 1
08002 Window and Relight Schedule ..... 1- 1
Supplements:
Window and Relight Schedule ..... 1- 1
Window and Relight Types ..... 1- 1
08110 Steel Doors and Frames ..... 1- 5
08300 Special Doors ..... 1- 2
08520 Aluminum Windows ..... 1- 6
08710 Door Hardware ..... 1- 10
08800 Glazing ..... 1- 5

DIVISION 9—FINISHES

09000 Finish Schedules ..... 1- 1
Supplements:
Interior Finish Schedule ..... 1- 2
Exterior Finish Schedule ..... 1- 1
Color List ..... 1- 2
09250 Gypsum Board ..... 1- 10
09300 Tile ..... 1- 5
09545 Fiberglass Reinforced Plastic (FRP) Wall Surfaces ..... 1- 3
09653 Resilient Base ..... 1- 4
09900 Painting and Protective Coatings ..... 1- 27
Supplement:
Paint System Data Sheet ..... 1- 2

DIVISION 10—SPECIALTIES

10200 Louvers ..... 1- 5
Supplement:
Louver Schedule ..... 1- 2

Pages

10400 Identifying Devices ..... 1- 7
Supplement:
Sign Schedule ..... 1- 3
10500 Lockers ..... 1- 3
10520 Portable Fire and Safety Equipment ..... 1- 3
10800 Toilet and Bath Accessories ..... 1- 3
10999 Miscellaneous Specialties ..... 1- 3

## VOLUME 2

DIVISION 11—EQUIPMENT

11203 Liquid-Phase Carbon Adsorption System ..... 1- 18
11235 Tank Mixer ..... 1- 6
Supplement:
Digested Sludge Mixer 1 and 2 Data Sheet ..... 1- 1
11240 Metering Pumps ..... 1- 6
Supplements:
Froth Pump No. 1 and No. 2 Data Sheet ..... 1- 2
11305 Submersible Pumps ..... 1- 6
Supplement:
Sump Pump 1 and 2 Data Sheet ..... 1- 2
11312 Horizontal End Suction Centrifugal Pumps ..... 1- 5
Supplements:
Filter Feed Pumps No. 1 and 2 Data Sheet ..... 1- 3
Backwash Pumps No. 1 and 2 Data Sheet ..... 1- 3
Decant Pumps No. 1 and No. 2 Data Sheet ..... 1- 3
Backwash Recycle Pump No. 1 Data Sheet ..... 1- 3
Stormwater/Recycle Pump No. 1 Data Sheet ..... 1- 3
11315 Progressing Cavity Pumps ..... 1- 4
Supplement:
DAF Feed Pump No. 1 and No. 2 Data Sheet ..... 1- 3
11318 Air-Operated Diaphragm Pumps ..... 1- 3
Supplements:
Oil Pump Data Sheet ..... 1- 2
Spare Pump Data Sheet ..... 1- 2
11371 Compressed Air Systems ..... 1- 4
11374 Rotary Air Blower ..... 1- 12
11500 Dissolved Air Flotation Equipment ..... 1- 38

DIVISION 12—FURNISHINGS (NOT USED)

Pages

DIVISION 13—SPECIAL CONSTRUCTION

13122 Metal Building Systems ..... 1- 7
13205 Fiberglass Reinforced Plastic Tank ..... 1- 8
Supplements:
FRP Tank Schedule ..... 1- 2
40T1010 – Equalization Tank Data Sheets ..... 1- 2
40T1330 – Effluent Tank Data Sheet ..... 1- 1
40T1400 – Product Tank (Cover Only) Data Sheet ..... 1- 2
40T1440 – Dirty Backwash Tank Data Sheet ..... 1- 1
40T1520 – Stormwater/Recycle Tank Data Sheet ..... 1- 1
50T1380 – Froth Tank Data Sheet ..... 1- 2
User's Basic Requirements Specification (UBRS) Form – Equalization Tank ..... 1- 5
User's Basic Requirements Specification (UBRS) Form – Stormwater/Recycle Tank ..... 1- 5
User's Basic Requirements Specification (UBRS) Form – Froth Tank ..... 1- 5
User's Basic Requirements Specification (UBRS) Form – Dirty Backwash Tank ..... 1- 5
User's Basic Requirements Specification (UBRS) Form – Effluent Tank ..... 1- 5
13400 Process Instrumentation and Control Systems (PICS) ..... 1- 26
Supplements:
Example System Problem Report Form ..... 1- 1
Preparation for Testing and Functional Test Form ..... 1- 3
13411 Instruments and Panels Subsystem (IPS) ..... 1- 19
Supplements:
Component Specifications ..... 1- 18
Instrument List ..... 1- 16
PLC I/O Summary ..... 1- 7
13850 Fire Alarm ..... 1- 18
Supplement:
Sequence of Operations Matrix – FACP Fire Alarm System ..... 1- 1
13935 HFC-227ea Clean Agent Fire Suppression System ..... 1- 14

DIVISION 14—NOT USED

Pages

DIVISION 15—MECHANICAL


| | | |
|---|---|---|
| 15060 | Piping Support Systems | 1- 9 |
| | Supplement: | |
| | Table 1 | 1- 1 |
| 15080 | Process Piping Insulation | 1- 5 |
| 15100 | Plumbing Piping and Accessories | 1- 13 |
| 15200 | Process Piping - General | 1- 13 |
| | Supplement: | |
| | Piping Schedule | 1- 2 |
| 15200-01 | DS – Cement-Mortar-Lined Ductile Iron Pipe and Fittings | 1- 2 |
| 15200-08 | DS – Stainless Steel Pipe and Fittings - General Service | 1- 2 |
| 15200-10 | DS – Polyvinyl Chloride (PVC) Pipe and Fittings | 1- 2 |
| 15200-12 | DS – Fiberglass Reinforced Plastic (FRP) Pipe and Fittings | 1- 2 |
| 15200-13 | DS – Copper and Copper Alloy Pipe, Tubing, and Fittings | 1- 1 |
| 15200-20 | DS – Polyvinyl Chloride Drain Waste and Vent (PVC-DWV) Pipe and Fittings | 1- 1 |
| 15202 | Process Valves and Operators | 1- 14 |
| | Supplements: | |
| | Open/Close Valve Schedule | 1- 1 |
| | Self-Contained Valve Schedule | 1- 1 |
| 15205 | Process Piping Specialties | 1- 6 |
| 15410 | Plumbing Fixtures | 1- 10 |
| 15440 | Plumbing Equipment | 1- 6 |
| | Supplements: | |
| | Electric Water Heater Data Sheet | 1- 1 |
| | Domestic Hot Water Circulating Pump Data Sheet | 1- 1 |
| | Backflow Preventers Data Sheet | 1- 1 |
| | Plant Water Pressure Tank 50T1575 Data Sheet | 1- 1 |
| 15730 | Unitary Air-Conditioning Equipment | 1- 5 |
| 15760 | Terminal Heat Transfer Units | 1- 2 |
| 15810 | Metal Ductwork and Accessories | 1- 14 |
| 15830 | Fans | 1- 13 |
| 15850 | Air Outlets and Inlets | 1- 2 |
| 15950 | HVAC Systems Testing, Adjusting, and Balancing | 1- 5 |
| 15955 | Piping Leakage Testing | 1- 3 |


DIVISION 16—ELECTRICAL


| | | |
|---|---|---|
| 16010 | Basic Electrical Requirements | 1- 3 |
| 16050 | Basic Electrical Materials and Methods | 1- 18 |
| 16080 | Electrical Testing | 1- 11 |
| 16120 | Conductors | 1- 15 |

Pages

16130 Raceways ..... 1- 12
16220 AC Induction Motors ..... 1- 9
16230 Gasoline Engine Generator Set ..... 1- 4
16260 Low Voltage Adjustable Frequency Drive Systems ..... 1- 14
16288 Transient Voltage Surge Suppressors (TVSS) ..... 1- 4
16440 Low Voltage Motor Control ..... 1- 9
16500 Lighting ..... 1- 9

**VOLUME 3**

DRAWINGS

**VOLUME 4**

DESIGN DETAILS

**END OF SECTION**

# SPECIFICATIONS

AES10 Architect and Engineering Services Contract
Contract No. 68-S7-04-01

# Addendum
# Additional Geotechnical Investigations for Replacement Groundwater Treatment Plant Wyckoff Eagle Harbor Superfund Site

**PREPARED FOR:** U.S. Environmental Protection Agency

**PREPARED BY:** Sandra McGinnis, L.E.G., CH2M HILL, Bellevue, WA
Joel Theodore, P.E., CH2M HILL, Bellevue, WA

**DATE:** February 23, 2005

## Summary and Background

This technical memorandum is an addendum to the September 2004, *Draft Geotechnical Data Report – Boring and Piezometer Installation Upgradient Cutoff Wall, Wyckoff/Eagle Harbor Superfund Site.*[1] This addendum presents the results of a supplemental geotechnical investigation to support planning and design efforts for the replacement groundwater treatment plant (RGWTP) at the Wyckoff Eagle Harbor Superfund Site (site).

The purpose of the geotechnical investigation was to:

- Better characterize the geology and the underlying aquitard depth in the location of the planned RGWTP and
- Gather information on the subsurface soils and groundwater conditions for the RGWTP engineering design.

The subsurface information for the RGWTP design project prior to the completion of this supplemental investigation consisted chiefly of two reports:

- 1997 CH2M HILL geotechnical investigation report for the replacement biological groundwater treatment plant (CH2M HILL, 1997[2]). Five geotechnical borings (Borings B-1 through B-5) were installed during that design effort in the area of the current boiler building.

- 2004 CH2M HILL geotechnical investigation completed in July 2004 along the base of the hillside for the upgradient cut off wall design (CH2M HILL, 2004). Thirteen borings and nine piezometers (labeled PZ-01 through PZ-15) were completed during that effort.

---

[1] CH2M HILL (2004). *Boring and Piezometer Installation Upgradient Cutoff Wall, Wyckoff/Eagle Harbor Superfund Site.* Prepared for the US Environmental Protection Agency, Region 10. September.

[2] CH2M HILL (1997). *Geotechnical Investigation for the Wyckoff Replacement Groundwater Treatment Plant, Wyckoff Groundwater Operable Unit, Wyckoff/Eagle Harbor Superfund Site, Bainbridge, Washington.* Prepared for the US Environmental Protection Agency. February.

Relevant boring logs from these two previous geotechnical investigations are included in Attachment A. The RGWTP footprint has changed and location has moved since the initial geotechnical investigation was completed in 1997. In addition, the results of the 2004 geotechnical/piezometer borings revealed that the aquitard was absent or very thin in the area south of the new RGWTP. As subsurface conditions can vary widely from anticipated conditions CH2M HILL recommended the installation of additional borings to confirm the aquitard presence in the sump area in order to identify any potential problems during the RGWTP design process in lieu of during construction activities. During this supplemental geotechnical investigation, five (5) borings were drilled within the footprint of the proposed RGWTP tank farm at the site.

## Methodology

Existing boring information noted above was reviewed and the supplemental boring locations were determined by the CH2M HILL geotechnical engineer. The field exploration program was coordinated by the CH2M HILL engineering geologist. Borings were drilled to collect and log soil samples. Soils samples were then selected for laboratory testing to determine pertinent engineering properties and aid in soils classification. This addendum was then prepared to document the methods and results of the field investigation and laboratory testing.

## Boring Explorations

This supplemental geotechnical investigation consisted of drilling five (5) borings within the footprint of the planned RGWTP tank farm. A truck-mounted CME-75 drill rig was mobilized to the site by Cascade Drilling, Inc., of Woodinville, Washington. The five soil borings were drilled to depths of 21.5 feet below ground surface (bgs). Boring locations were determined by measuring from existing landmarks. Approximate boring locations are shown on Figure 1.

Drilling explorations were conducted on February 3rd and 4th, 2005 under the direction of a CH2M HILL engineering geologist. The drilling process was accomplished using an 8-inch (outside diameter) hollow-stem auger. Representative disturbed soil samples were obtained from the borings using Standard Penetration Tests (SPTs). SPTs were generally conducted at 5-foot intervals and were performed in general accordance with ASTM D1586 – *Standard Penetration Test Method for Penetration Test and Split Barrel Sampling of Soils*. A brief description of the SPT is provided on the boring logs in Attachment B. The SPTs were completed using an automatic-trip hammer. This hammer is equipped with a 140-pound weight and uses a free fall of 30 inches. Sample liners were not used in any of the SPTs.

The engineering geologist logged soil conditions in the borings and obtained representative soil samples. Logs of the soil borings for this study are included as Attachment B. The soils encountered in the borings were visually classified and described in the logs in accordance with the ASTM D2488 - *Standard Practice for Description and Identification of Soils (Visual-Manual Procedure)*, except when classified by laboratory results as described below.

Samples were sealed in ziploc-type bags to preserve the natural moisture content. Selected samples were submitted for laboratory testing. Laboratory testing is further described in the *Laboratory Testing Program* section of this memorandum.

Head-space readings within the sampling bags were collected using calibrated Multirae meter containing a Photoionization Detector (PID) for measuring volatile organic compounds (VOC) within the airspace in the sampling bags. Breathing zone measurements near the borings, and background breathing zone measurements were also recorded. PID measurement readings were recorded on the boring logs in Attachment B.

### Laboratory Testing Program

Laboratory tests to determine pertinent geotechnical index properties on selected soil samples were subcontracted to Soil Technology Inc. of Bainbridge Island. Tests were performed to confirm field classifications and provide additional data needed for geotechnical engineering and hydrological analyses. Laboratory test results are shown on the boring logs in Attachment B and copies of the results are included in Attachment C. Laboratory testing included the following:

- ASTM D 422 - *Standard Test Method for Particle-Size Analysis of Soils*
- ASTM D 1140 – *Standard Test Method for Amount of Material in Soils Finer than the No. 200 (75-μM) Sieve*
- ASTM D 4318 – *Standard Test Method for Liquid Limit, Plastic Limit, and Plasticity Index of Soils* (Atterberg Limits)
- ASTM D 2216 - *Standard Test Method for Laboratory Determination of Water (Moisture) Content of Soil and Rock*

## Subsurface Conditions

These sections describe the soil and groundwater conditions encountered during the subsurface investigation within the footprint of the RGWTP tank farm.

### Subsurface Soil Conditions

Five borings were drilled to 21.5 feet bgs within the project footprint. Locations are shown in Figure 1. Three borings were drilled along the southern side of the proposed tank farm footprint including one for the sump, and two were drilled along the northern side of the footprint. The two borings along the northern side were drilled within the planned containment sump. Soils were visually classified and selected samples were tested for engineering index properties. Based on the grain-size analyses and plasticity results, the selected soil samples were classified and described in accordance with ASTM D2487 – *Classification of Soils for Engineering Purposes.* A summary of laboratory test results are presented in Table 1.

Soils within the project footprint generally consisted of:

- Loose to medium dense fill to between 3.0 to 5.1 feet in depth
- Medium dense, native marine sand to 5.3 feet in depth (in boring B-10-2005 only)
- Very dense glacial silt to the bottoms of all borings at 21.5 feet bgs (except B-08-2005)
- Very dense fluvial sand at 9.5 feet in depth to the bottom of the boring at 21.5 feet in boring B-08-2005 only

Fill consisted of loose to medium dense silty sand with varying amounts of gravel. Marine sand consisted of dense, poorly graded sand. The aquitard generally consisted of glacially deposited and overridden, hard clay or silt with varying amounts of gravel and fine-grained sand. Fluvial sand consisted of very dense, poorly graded, fine-grained sand with well graded sand with gravel layers. Depths that stratigraphic layers were encountered in each boring are summarized in Table 2.

A mothball odor was encountered in the cuttings at about 3.5 feet bgs and in the sample from 5 to 6.5 feet bgs. Headspace PID readings of 1.8 parts-per-million (ppm) were measured for the sample from 5 to 6.5 feet bgs.

**TABLE 1**
Laboratory Test Result Summary

| Boring Number | Sample Number | Depth to Top (ft) | Moisture Content (%) | LL | PL | PI | Gravel (%) | Sand (%) | Silt (%) | Clay (%) | Unified Soil Classification |
|---|---|---|---|---|---|---|---|---|---|---|---|
| B-06-2005 | S-4 | 10.0 | 9 | | | | 27.6 | 26.7 | 29.1 | 16.6 | GM |
| B-06-2005 | S-5 | 12.5 | 17 | 41 | 17 | 24 | | | | | CL |
| B-07-2005 | S-3 | 7.5 | 11 | 30 | 15 | 15 | | | | | CL |
| B-08-2005 | S-2 | 5.0 | 14 | | | | 5.0 | 25.5 | 42.6 | 26.9 | ML |
| B-09-2005 | S-2 | 5.0 | 10 | | | | 16.4 | 33.7 | 31.5 | 18.4 | SM |
| B-10-2005 | S-4 | 10.0 | 14 | 39 | 15 | 24 | | | | | CL |

**TABLE 2**
Depth of Stratigraphic Units

| Boring Number | Depth (ft bgs) | Stratigraphic Unit |
|---|---|---|
| B-06-2005 | 0-5.1 | Fill |
| | 5.1-21.5 | Aquitard |
| B-07-2005 | 0-3.5 | Fill |
| | 3.5-21.5 | Aquitard |
| B-08-2005 | 0-4.5 | Fill |
| | 4.5-9.5 | Aquitard |
| | 9.5-21.5 | Fluvial Sand |
| B-09-2005 | 0-4.0 | Fill |
| | 4.0-21.5 | Aquitard |
| B-10-2005 | 0-3.0 | Fill |
| | 3.0-5.3 | Marine Sand |
| | 5.3-21.5 | Aquitard |

## Groundwater Conditions

Groundwater was encountered in one boring (B-08-2005) at about 9.5 feet bgs while drilling. This was groundwater from the lower aquifer as the upper aquifer was not encountered while drilling at this location.

The aquitard was encountered from about 3.5 to 5.3 feet (just below the fill or the marine sand) to the bottoms of the borings at 21.5 feet in four borings (B-06-2005, B-07-2005, B-09-2005, and B-10-2005). In boring B-08-2005, the aquitard was encountered from 4.5 bgs (just below the fill) to approximately 9.5 feet bgs. The aquitard was underlain by fluvial sand and the lower aquifer.

Attachment A

# Existing Geotechnical Boring Logs

CH2M HILL

| PROJECT NUMBER | BORING NUMBER | |
|---|---|---|
| 137285.04.01 | B-1 | SHEET 1 OF 2 |

# SOIL BORING LOG

PROJECT WYCKOFF TREATMENT PAD GEOTECHNICAL INVESTIGATION LOCATION BAINBRIDGE ISLAND, WA

ELEVATION DRILLING CONTRACTOR CASCADE DRILLING, INC.

DRILLING METHOD AND EQUIPMENT CME-75 HSA WITH AUTOMATIC 140# HAMMER

WATER LEVELS 32 FT START 2-3-97 FINISH 2-3-97 LOGGER T.THOMAS

| DEPTH BELOW SURFACE (FT) | SAMPLE INTERVAL | SAMPLE TYPE AND NUMBER | SAMPLE RECOVERY | STANDARD PENETRATION TEST RESULTS 6"-6"-6" (N) | SOIL DESCRIPTION: SOIL NAME, USCS GROUP SYMBOL, COLOR, MOISTURE CONTENT, RELATIVE DENSITY OR CONSISTENCY, SOIL STRUCTURE, MINERALOGY | COMMENTS: DEPTH OF CASING, DRILLING RATE, DRILLING FLUID LOSS, TESTS AND INSTRUMENTATION |
|---|---|---|---|---|---|---|
| 5.0 | 5.0–6.5 | S1 | 1.5 | 10-15-17 (32) | SANDY LEAN CLAY (CL), gray, slightly moist, hard, difficult to break by hand, predominately fine grained sand, sandier at top of sample, w/occasional sand partings at ~50° from horizontal. | MC=14% |
| 10.0 | 10.0–11.5 | S2 | 1.4 | 10-17-25 (42) | LEAN CLAY WITH SAND, CL, gray, dry to slightly moist, hard, 20% fine grained sand with 7% fine (1/4" minus) gravel. | MC=15%, GSA |
| 15.0 | 15.0–16.5 | S3 | 1.4 | 17-23-41 (64) | LEAN CLAY WITH SAND, CL, as above, except with more and larger (1" minus) gravel, occasional less than 1/4" thick sand seams, one of the sand seams at 16.2' was wet. | MC=17%, PL=19%, LL=40% Gravel in cuttings are approximately 1/2" minus sub-rounded. Driller said drilling was the same as above with occasional gravel mixed with sand. |
| 20.0 | 20.0–21.5 | S4 | 1.5 | 8-12-18 (30) | LEAN CLAY WITH SAND, (CL), SANDY SILT, (ML), as above, except fewer and smaller gravel than S3, except for one 1" dia. broken gravel, sample wet at top 1". | MC=15% |
| 25.0 | 25.0–26.5 | S5 | 1.5 | 9-13-18 (31) | LEAN CLAY WITH SAND, CL, as above, except with fewer sand partings and no sand seams. | MC=16%, PL=16%, LL=43% |
| | 30.0 | | | | | |

WYKBLOG Use BORING Template

CH2M HILL

| PROJECT NUMBER | BORING NUMBER |
|---|---|
| 137285.04.01 | B-1 SHEET 2 OF 2 |

# SOIL BORING LOG

PROJECT WYCKOFF TREATMENT PAD GEOTECHNICAL INVESTIGATION LOCATION BAINBRIDGE ISLAND, WA

ELEVATION _____ DRILLING CONTRACTOR CASCADE DRILLING, INC.

DRILLING METHOD AND EQUIPMENT CME-75 HSA WITH AUTOMATIC 140# HAMMER

WATER LEVELS 32 FT START 2-3-97 FINISH 2-3-97 LOGGER T.THOMAS

| DEPTH BELOW SURFACE (FT) | SAMPLE INTERVAL | SAMPLE TYPE AND NUMBER | SAMPLE RECOVERY | STANDARD PENETRATION TEST RESULTS 6"-6"-6" (N) | SOIL DESCRIPTION: SOIL NAME, USCS GROUP SYMBOL, COLOR, MOISTURE CONTENT, RELATIVE DENSITY OR CONSISTENCY, SOIL STRUCTURE, MINERALOGY | COMMENTS: DEPTH OF CASING, DRILLING RATE DRILLING FLUID LOSS TESTS AND INSTRUMENTATION |
|---|---|---|---|---|---|---|
| | 30.0 – 31.5 | S6 | 2.0 | 9-11-13 (24) | Top 20": LEAN CLAY WITH SAND, CL, gray, moist, very stiff, smooth, 25% fine grained sand, 2% 1" minus rounded to sub-rounded gravel. Bottom 2": SANDY LEAN CLAY, (CL), tan-gray with trace of orange, slightly moist, predominately fine grained sand with scattered coarse grains. | MC=17%, GSA<br>Driller reported water at 32'. |
| 35.0 | 35.0 – 36.5 | S7 | 0.9 | 50/5.5" | Top 1.5": SANDY SILT, (ML), as above. Bottom 9": POORLY GRADED SAND WITH SILT/LEAN CLAY, (SP-SM/SP-SC), gray, wet, sand is loose and soft in sample, although blow counts are high, predominately medium grained sand, approximately 10% fines. | MC=20%<br>Driller said it did not feel like sampler was bouncing on gravel when asked about blow counts. |
| 40.0 | 40.0 – 40.5 | S8 | 1.8 | 55/5.5" | Slough from heaving sand at top of sample. POORLY GRADED SAND WITH SILT/LEAN CLAY, SP-SM/SP-SC, as above, 12% fines, except with faintly visible layers of varying sand grain sizes and shades of gray. END OF BORING AT 40.5 FEET | MC=25%, P200 Driller reported ~1.5' of heave, but he added a little water and it dropped right out.<br>Tremie grouting CETCO colloid grout at a 15 gallon/bag mix to seal aquifer. Used total of 5-50# bags. |
| 45.0 | | | | | | |
| 50.0 | | | | | | |
| 55.0 | | | | | | |

HYKBLOG Use BORING Template

CH2M HILL

| PROJECT NUMBER | BORING NUMBER |
|---|---|
| 137285.04.01 | B-2 SHEET 1 OF 2 |

# SOIL BORING LOG

PROJECT WYCKOFF TREATMENT PAD GEOTECHNICAL INVESTIGATION LOCATION BAINBRIDGE ISLAND, WA

ELEVATION _____ DRILLING CONTRACTOR CASCADE DRILLING, INC.

DRILLING METHOD AND EQUIPMENT CME-75 HSA WITH AUTOMATIC 140# HAMMER

WATER LEVELS -41.5 FT START 2-3-97 FINISH 2-3-97 LOGGER T.THOMAS

| DEPTH BELOW SURFACE (FT) | SAMPLE INTERVAL | SAMPLE TYPE AND NUMBER | SAMPLE RECOVERY | STANDARD PENETRATION TEST RESULTS 6"-6"-6" (N) | SOIL DESCRIPTION: SOIL NAME, USCS GROUP SYMBOL, COLOR, MOISTURE CONTENT, RELATIVE DENSITY OR CONSISTENCY, SOIL STRUCTURE, MINERALOGY | COMMENTS: DEPTH OF CASING, DRILLING RATE DRILLING FLUID LOSS TESTS AND INSTRUMENTATION |
|---|---|---|---|---|---|---|
| 5.0 | 5.0 – 6.5 | S1 | 1.3 | 10-15-22 (37) | SANDY LEAN CLAY, CL, gray, slightly moist, hard, predominately fine with some medium grained sand, approximately 10% 1/2" minus, sub-rounded gravel, (similar to B1). | MC=13%, PL=14%, LL=26% Faint odor on sample. Drillers haven't smelled anything and OVA=00. Driller reports "Harder at 7"". |
| 10.0 | 10.0 – 11.5 | S2 | 1.2 | 19-29-33 (62) | SANDY LEAN CLAY, CL, as above, 34% predominately fine grained sand, except dry to slightly moist, hard, one white powdery parting w/a white powder inclusion approximately 1/2" diameter at 10.5', approximately 10% gravel (very hard - like concrete). | MC=13%, GSA |
| 15.0 | 15.0 – 16.5 | S3 | 1.5 | 14-21-35 (56) | SANDY LEAN CLAY, (CL), as above, except with one 1" diamter gravel at about 16', predominately fine grained sand with occasional coarse grained sand. | MC=9% |
| 20.0 | 20.0 – 21.5 | S4 | 1.5 | 20-23-30 (53) | GRAVELLY SANDY LEAN CLAY/ SANDY LEAN CLAY WITH GRAVEL, (CL), gray, dry to slightly moist, very hard, ~1" minus broken gravel tore up sample, approximately 25-30% gravel. | MC=9% |
| 25.0 | 25.0 – 26.5 | S5 | 1.5 | 17-25-27 (52) | LEAN CLAY WITH SAND, (CL), similar to above except with fewer gravel (approximately 10% gravel) and moist. | MC=13% |
| | 30.0 | | | | | |

WYK02.LOG Use BORING Template

CH2M HILL

| PROJECT NUMBER | BORING NUMBER |
|---|---|
| 137285.04.01 | B-2 SHEET 2 OF 2 |

# SOIL BORING LOG

PROJECT WYCKOFF TREATMENT PAD GEOTECHNICAL INVESTIGATION LOCATION BAINBRIDGE ISLAND, WA

ELEVATION _____ DRILLING CONTRACTOR CASCADE DRILLING, INC.

DRILLING METHOD AND EQUIPMENT CME-75 HSA WITH AUTOMATIC 140# HAMMER

WATER LEVELS ~41.5 FT START 2-3-97 FINISH 2-3-97 LOGGER T.THOMAS

| DEPTH BELOW SURFACE (FT) | SAMPLE INTERVAL | SAMPLE TYPE AND NUMBER | SAMPLE RECOVERY | STANDARD PENETRATION TEST RESULTS 6"-6"-6" (N) | SOIL DESCRIPTION: SOIL NAME, USCS GROUP SYMBOL, COLOR, MOISTURE CONTENT, RELATIVE DENSITY OR CONSISTENCY, SOIL STRUCTURE, MINERALOGY | COMMENTS: DEPTH OF CASING, DRILLING RATE, DRILLING FLUID LOSS, TESTS AND INSTRUMENTATION |
|---|---|---|---|---|---|---|
| | 30.0–31.5 | S6 | 1.7 | 12-17-28 (45) | LEAN CLAY WITH SAND, (CL), as above, moist, very hard, slightly more sub-rounded 1/2" minus gravel (approximately 15% gravel). | MC=11, PL=13%, LL=24% |
| 35.0 | 35.0–36.5 | S7 | 1.5 | 15-17-18 (35) | LEAN CLAY WITH SAND, CL, as above, 2% fine gravel, 17% fine grained sand. | MC=18%, GSA |
| 40.0 | 40.0–41.5 | S8 | 1.8 | 14-20-21 (41) | Top approximately 1": SILTY SAND/CLAYEY SAND, (SM/SC), wet. Bottom 20": SANDY LEAN CLAY, (CL), as above, except gravel is larger (approximately 3/4" minus). | MC=12% |
| | | | | | END OF BORING AT 41.5 FEET | Bottom of hole is wet. Dropped plug at end of wireline to check. It came back wet. Tremie grouting hole with 6- 50# bags of PURE GOLD Grout. |
| 45.0 | | | | | | |
| 50.0 | | | | | | |
| 55.0 | | | | | | |

WYKB2.LOG
Use BORING Template

CH2M HILL

| PROJECT NUMBER | BORING NUMBER |
|---|---|
| 137285.04.01 | B-3 SHEET 1 OF 2 |

# SOIL BORING LOG

PROJECT WYCKOFF TREATMENT PAD GEOTECHNICAL INVESTIGATION LOCATION BAINBRIDGE ISLAND, WA

ELEVATION _____ DRILLING CONTRACTOR CASCADE DRILLING, INC.

DRILLING METHOD AND EQUIPMENT CME-75 HSA WITH AUTOMATIC 140# HAMMER

WATER LEVELS 37 FT START 2-3-97 FINISH 2-3-97 LOGGER T.THOMAS

| DEPTH BELOW SURFACE (FT) | SAMPLE INTERVAL | SAMPLE TYPE AND NUMBER | SAMPLE RECOVERY | STANDARD PENETRATION TEST RESULTS 6"-6"-6" (N) | SOIL DESCRIPTION: SOIL NAME, USCS GROUP SYMBOL, COLOR, MOISTURE CONTENT, RELATIVE DENSITY OR CONSISTENCY, SOIL STRUCTURE, MINERALOGY | COMMENTS: DEPTH OF CASING, DRILLING RATE DRILLING FLUID LOSS TESTS AND INSTRUMENTATION |
|---|---|---|---|---|---|---|
| | | | | | | 3' of angular and broken cobbles as fill at surface. |
| 5.0 | 5.0 – 6.5 | S1 | 1.2 | 9-14-18 (32) | SANDY LEAN CLAY/LEAN CLAY WITH SAND, (CL), gray, moist, hard, predominately fine grained sand, approximately 10% 1/4" minus gravel and trace 3/4" minus gravel, with occasional FeO stained fine to medium grained sand seams. | MC=12% |
| 10.0 | 10.0 – 11.5 | S2 | 1.1 | 14-26-40 (66) | SANDY LEAN CLAY, CL, as above, except no FeO staining, 34% predominately fined grained sand, 10% fine gravel. | MC=11%, GSA |
| 15.0 | 15.0 – 16.5 | S3 | 1.9 | 10-24-28 (52) | SANDY LEAN CLAY, CL, as above, except with approximately 10 to 15% 3/4" minus gravel. | MC=12%, PL=14%, LL=28% |
| 20.0 | 20.0 – 21.5 | S4 | 1.5 | 12-20-26 (46) | SANDY LEAN CLAY, (CL), as above. | MC=11% |
| 25.0 | 25.0 – 26.5 | S5 | 1.6 | 15-16-20 (36) | SANDY LEAN CLAY, (CL), as above, except generally smoother, fewer (approximately 5%) gravel. | Rock in tip of sampler chewed up sample. MC=19% |
| | 30.0 | | | | | |

WYKD.LOG Use BORING Template

CH2M HILL

| PROJECT NUMBER | BORING NUMBER |
|---|---|
| 137285.04.01 | B-3 SHEET 2 OF 2 |

# SOIL BORING LOG

PROJECT WYCKOFF TREATMENT PAD GEOTECHNICAL INVESTIGATION LOCATION BAINBRIDGE ISLAND, WA

ELEVATION _____ DRILLING CONTRACTOR CASCADE DRILLING, INC.

DRILLING METHOD AND EQUIPMENT CME-75 HSA WITH AUTOMATIC 140# HAMMER

WATER LEVELS 37 FT START 2-3-97 FINISH 2-3-97 LOGGER T.THOMAS

| DEPTH BELOW SURFACE (FT) | SAMPLE INTERVAL | SAMPLE TYPE AND NUMBER | SAMPLE RECOVERY | STANDARD PENETRATION TEST RESULTS 6"-6"-6" (N) | SOIL DESCRIPTION: SOIL NAME, USCS GROUP SYMBOL, COLOR, MOISTURE CONTENT, RELATIVE DENSITY OR CONSISTENCY, SOIL STRUCTURE, MINERALOGY | COMMENTS: DEPTH OF CASING, DRILLING RATE, DRILLING FLUID LOSS, TESTS AND INSTRUMENTATION |
|---|---|---|---|---|---|---|
| | 30.0–31.5 | S6 | 1.5 | 15-24-24 (48) | SANDY LEAN CLAY, CL, as above, except sandier, 45% predominately fine grained sand, with more (8%) gravel, several 1" to 1.5" dia. gravel, one small zone of orange sand with 1.5" dia. gravel. | MC=10%, GSA |
| 35.0 | 35.0–36.5 | S7 | 1.8 | 8-12-17 (29) | SANDY LEAN CLAY, CL, as above, except more moist, therefore more apparently plastic. | MC=19%, PL=18%, LL=40%<br>Driller reports water at 37'. |
| 40.0 | 40.0–41.4 | S8 | 1.7 | 35-41-50/4" (>91) | SILTY SAND, (SM), olive gray, wet, very dense, grades from fine to medium grained sand in upper 9" of sample to fine grained sand in lower 8". | Driving advance stopped/slowed over last 2" of drive. 1/2" dia. white rock in tip.<br>MC=22% |
| | | | | | END OF BORING AT 41.4 FEET | Tremie grouting hole with 6- 50# bags of PURE GOLD Grout. |
| 45.0 | | | | | | |
| 50.0 | | | | | | |
| 55.0 | | | | | | |

MYKBJ.LOG
Use BORING Template

CH2M HILL

| PROJECT NUMBER | BORING NUMBER |
|---|---|
| 137285.04.01 | B-4 SHEET 1 OF 2 |

# SOIL BORING LOG

PROJECT WYCKOFF TREATMENT PAD GEOTECHNICAL INVESTIGATION LOCATION BAINBRIDGE ISLAND, WA

ELEVATION _____ DRILLING CONTRACTOR CASCADE DRILLING, INC.

DRILLING METHOD AND EQUIPMENT CME-75 HSA WITH AUTOMATIC 140# HAMMER

WATER LEVELS NONE ENCOUNTERED START 2-4-97 FINISH 2-4-97 LOGGER T.THOMAS/T.VON WALL

| DEPTH BELOW SURFACE (FT) | SAMPLE INTERVAL | SAMPLE TYPE AND NUMBER | SAMPLE RECOVERY | STANDARD PENETRATION TEST RESULTS 6"-6"-6" (N) | SOIL DESCRIPTION: SOIL NAME, USCS GROUP SYMBOL, COLOR, MOISTURE CONTENT, RELATIVE DENSITY OR CONSISTENCY, SOIL STRUCTURE, MINERALOGY | COMMENTS: DEPTH OF CASING, DRILLING RATE, DRILLING FLUID LOSS, TESTS AND INSTRUMENTATION |
|---|---|---|---|---|---|---|
| 5.0 | 5.0–6.5 | S1 | 1.3 | 4-3-4 (7) | SANDY LEAN CLAY, (CL), gray with FeO staining on sand seams and inclusions, moist, medium stiff. | At 1" from top of sample were two layers of fiber mat material. MC=15% |
| 10.0 | 10.0–11.5 | S2 | 1.4 | 4-3-9 (12) | Top 6": ORGANIC SANDY SILT/LEAN CLAY/SILTY SAND, (OL//CL/ML/SM), dark gray/green, moist to wet, sfot, medium grained sand, abundant organics and wood debris. Middle 3": POORLY GRADED SAND WITH SILT, (SP-SM), gray, wet, predominately medium grained sand. Bottom 7": SANDY LEAN CLAY, (CL), gray, wet, fine grained sand, occasional 1/2" dia. organic zones, slightly plastic. | MC=27% |
| | | | | | | Driller reports "Harder at 12"". |
| 15.0 | 15.0–16.5 | S3 | 1.8 | 17-27-38 (65) | SANDY LEAN CLAY WITH GRAVEL, (CL), olive gray, slightly moist to dry, very hard, with approximately 35% 1/2" minus sub-angular gravel, predominately fine grained sand, approximately 50% fines. | MC=10% |
| 20.0 | 20.0–21.5 | S4 | 1.8 | 15-25-25 (50) | SANDY LEAN CLAY, CL, gray, slightly moist, very hard, predominately fine grained sand, occasional coarse sand grains, approximately 20% sub-angular to broken 1" minus gravel, trace fine organics. | MC=11%, PL=12%, LL=23% |
| 25.0 | 25.0–26.5 | S5 | 1.8 | 8-13-16 (29) | SANDY LEAN CLAY, (CL), as above, except approximately 20% 1/4" minus gravel, with occasional 1" minus gravel, no organics. | MC=12% |
| | 30.0 | | | | | |

WYKG4.LOG
Use BORING Template

CH2M HILL

| PROJECT NUMBER | BORING NUMBER |
|---|---|
| 137285.04.01 | B-4 SHEET 2 OF 2 |

# SOIL BORING LOG

PROJECT WYCKOFF TREATMENT PAD GEOTECHNICAL INVESTIGATION LOCATION BAINBRIDGE ISLAND, WA

ELEVATION _____ DRILLING CONTRACTOR CASCADE DRILLING, INC.

DRILLING METHOD AND EQUIPMENT CME-75 HSA WITH AUTOMATIC 140# HAMMER

WATER LEVELS NONE ENCOUNTERED START 2-4-97 FINISH 2-4-97 LOGGER T.THOMAS/T.VON WALL

| DEPTH BELOW SURFACE (FT) | SAMPLE INTERVAL | SAMPLE TYPE AND NUMBER | SAMPLE RECOVERY | STANDARD PENETRATION TEST RESULTS 6"-6"-6" (N) | SOIL DESCRIPTION: SOIL NAME, USCS GROUP SYMBOL, COLOR, MOISTURE CONTENT, RELATIVE DENSITY OR CONSISTENCY, SOIL STRUCTURE, MINERALOGY | COMMENTS: DEPTH OF CASING, DRILLING RATE DRILLING FLUID LOSS TESTS AND INSTRUMENTATION |
|---|---|---|---|---|---|---|
| | 30.0 – 31.5 | S6 | 1.8 | 14-16-20 (36) | SANDY LEAN CLAY, CL, as above except (wet at top of sample), hard, fewer gravel than above, predominately 1/2" minus, with few 1" dia. gravel. | MC=12%, PL=12%, LL=24% |
| 35.0 | 35.0 – 36.5 | S7 | 1.8 | 12-18-20 (38) | SANDY LEAN CLAY, (CL), as above. | MC=12% |
| | | | | | END OF BORING AT 36.5 FEET | Tremie grouting hole with 6- 50# bags of PURE GOLD Grout. |
| 40.0 | | | | | | |
| 45.0 | | | | | | |
| 50.0 | | | | | | |
| 55.0 | | | | | | |

RTKBALOG
Use BORING Template

CH2M HILL

| PROJECT NUMBER | BORING NUMBER | |
|---|---|---|
| 137285.04.01 | B-5 | SHEET 1 OF 1 |

# SOIL BORING LOG

PROJECT WYCKOFF TREATMENT PAD GEOTECHNICAL INVESTIGATION LOCATION BAINBRIDGE ISLAND, WA

ELEVATION _____ DRILLING CONTRACTOR CASCADE DRILLING, INC.

DRILLING METHOD AND EQUIPMENT CME-75 HSA WITH DOWN-HOLE 140# HAMMER

WATER LEVELS NONE ENCOUNTERED START 2-4-97 FINISH 2-4-97 LOGGER T.VON WALLMENICH

| DEPTH BELOW SURFACE (FT) | SAMPLE INTERVAL | SAMPLE TYPE AND NUMBER | SAMPLE RECOVERY | STANDARD PENETRATION TEST RESULTS 6"-6"-6" (N) | SOIL DESCRIPTION: SOIL NAME, USCS GROUP SYMBOL, COLOR, MOISTURE CONTENT, RELATIVE DENSITY OR CONSISTENCY, SOIL STRUCTURE, MINERALOGY | COMMENTS: DEPTH OF CASING, DRILLING RATE, DRILLING FLUID LOSS, TESTS AND INSTRUMENTATION |
|---|---|---|---|---|---|---|
| | | | | | | Surface was muddy sod with sand and gravel. |
| 5.0 | 5.0 | | | | | |
| | | S1 | 0.9 | 9-5-3 (8) | Top 6": CLAYEY/SILTY SAND, (SC/SM), dark brown, moist, loose, predominately fine to medium grained sand with occasional coarse grains, occasional (less than 5%) 1" minus gravel, abundant organics, 1" minus wood debris. Bottom 5": ORGANIC SILT/LEAN CLAY, (OL), dark brown, moist, soft to medium stiff, some fine grained sand, occasional 1" minus gravel, 1" minus wood debris. | MC=17% Driller reports easier penetration at 6'. |
| | 6.5 | | | | ORGANIC SILT, (OL), as above. | End of Shelby tube pinched, perhaps pushed on rock or material became more dense. MC=20% MC=38% |
| | | ST1 | 1.3 | PUSH | | |
| | 9.0 | | | | END OF BORING AT 9.0 FEET | Backfilled hole with bentonite chips. |

NYKDS.LOG Use BORING Template

# DRAFT

**PROJECT NUMBER:** 316783 **BORING NUMBER:** PZ-07



# SOIL BORING LOG

**PROJECT:** Wyckoff **LOCATION:** Edge of treese/ south road, cleared

**ELEVATION:** ~17-18' **DRILLING CONTRACTOR:** Cascade Drilling

**DRILLING METHOD AND EQUIPMENT:** Truck-mounted CME 75, 8" Hollow Stem Auger, 140-lb Autohammer, SPT

**WATER LEVELS:** Perched @ 4', wet @ 21' **START:** 07/26/2004 08:37 **FINISH:** 07/26/2004 10:10 **LOGGER:** RSVP

| DEPTH BELOW | SAMPLE NUMBER | SAMPLE TYPE | SAMPLE RECOVERY (FT) | STANDARD PENETRATION TEST RESULTS 6"-6"-6" (N) | SOIL DESCRIPTION: SOIL NAME, USCS GROUP SYMBOL, COLOR, MOISTURE CONTENT, RELATIVE DENSITY OR CONSISTENCY, SOIL STRUCTURE, MINERALOGY | COMMENTS: DEPTH OF CASING, DRILLING RATE, DRILLING FLUID LOSS, TESTS AND INSTRUMENTATION |
|---|---|---|---|---|---|---|
| 0 | | | | | Ground Surface | |
| | | | | | **SILTY SAND WITH GRAVEL (SM)** Brown, dry to moist; abundant creosote treated wood/logs (FILL) | slight |
| | WYK-S-PZ07-1.5 | SPT | 8" | 3-3-3 | | 1.4 ppm |
| | WYK-S-PZ07-3.0 | SPT | 8" | 1-8-4 | **SANDY SILTY CLAY (CL-ML)** Brown-gray mottling, moist, firm, occasional gravel (FILL) | Old geosynthetic fabric at 2.8' |
| 5 | WYK-S-PZ07-4.5 | SPT | 6" | 2-4-2 | Creosote treated wood in shoe at 5' | sheen, odor, oil |
| | WYK-S-PZ07-6.0 | SPT | 18" | 11-14-30 | **LEAN CLAY WITH GRAVEL (CL)** Gray, moist, hard (glacial layer), PP= 4.5+, gravel to 1" | 4.0 ppm |
| | WYK-S-PZ07-7.5 | SPT | 16" | 6-7-21 | | 3.0 ppm, no noticable odor from sample |
| 10 | WYK-S-PZ07-9.0 | SPT | 6" | 25-21-25 | | 4.0 ppm, no odor |
| | WYK-S-PZ07-10.5 | SPT | 18" | 17-20-28 | | 2.0 ppm, no odor |
| | WYK-S-PZ07-12.0 | SPT | 18" | 10-15-21 | | 2.0 ppm, no odor |
| | WYK-S-PZ07-13.5 | SPT | 18" | 15-16-17 | **LEAN CLAY (CL)** Gray, moist, hard, trace gravel to 1/4", PP=4.5+ | 1.5 ppm, no odor |
| 15 | WYK-S-PZ07-15.0 | SPT | 18" | 10-17-20 | | 2.2 ppm, no odor |
| | WYK-S-PZ07-6.5 | SPT | 18" | 11-15-20 | **LEAN CLAY (CL-CH)** Gray, moist, hard, more plastic than above, occasional gravel to 1/2" | 1.0 ppm, no odor |
| | WYK-S-PZ07-18.0 | SPT | 18" | 11-12-15 | | 2.0 ppm |
| 20 | WYK-S-PZ07-19.5 | SPT | 12" | 15-50\5" | | 2.0 ppm |
| | WYK-S-PZ07-21.0 | SPT | 18" | 9-13-15 | **SANDY SILTY CLAY (CL-ML)** Gray, wet, hard | 2.8 ppm |
| | WYK-S-PZ07-22.5 | SPT | 18" | 16-22-25 | **CLAYEY SAND (SC)** Gray, wet, dense | 1.8 ppm |
| 25 | WYK-S-PZ07-24.0 | SPT | 18" | 18-20-25 | **GRAVELLY CLAY WITH SAND (CL)** Gray, moist, hard, subround gravel to 1" | 1.8 ppm |
| 30 | | | | | | |

# DRAFT

**PROJECT NUMBER:** 316783 **BORING NUMBER:** PZ-07



# SOIL BORING LOG

**PROJECT:** Wyckoff **LOCATION:** Edge of treese/ south road, cleared

**ELEVATION:** ~17-18' **DRILLING CONTRACTOR:** Cascade Drilling

**DRILLING METHOD AND EQUIPMENT:** Truck-mounted CME 75, 8" Hollow Stem Auger, 140-lb Autohammer, SPT

**WATER LEVELS:** Perched @ 4', wet @ 21' **START:** 07/26/2004 08:37 **FINISH:** 07/26/2004 10:10 **LOGGER:** RSVP

| DEPTH BELOW | SAMPLE NUMBER | SAMPLE TYPE | SAMPLE RECOVERY (FT) | STANDARD PENETRATION TEST RESULTS 6"-6"-6" (N) | SOIL DESCRIPTION: SOIL NAME, USCS GROUP SYMBOL, COLOR, MOISTURE CONTENT, RELATIVE DENSITY OR CONSISTENCY, SOIL STRUCTURE, MINERALOGY | COMMENTS: DEPTH OF CASING, DRILLING RATE, DRILLING FLUID LOSS, TESTS AND INSTRUMENTATION |
|---|---|---|---|---|---|---|
| | WYK-S-PZ07-30.0 | SPT | 18" | 21-28-40 | POORLY GRADED SAND WITH SILT (SP-SM)<br>Gray, wet, dense, medium sand | |
| | | | | | End of Boring | |
| 35 | | | | | | |
| 40 | | | | | | |
| 45 | | | | | | |
| 50 | | | | | | |
| 55 | | | | | | |
| 60 | | | | | | |

# DRAFT

**PROJECT NUMBER:** 316783 **BORING NUMBER:** PZ-08



# SOIL BORING LOG

**PROJECT:** Wyckoff **LOCATION:** clear area at edge of trees

**ELEVATION:** **DRILLING CONTRACTOR:** Cascade Drilling

**DRILLING METHOD AND EQUIPMENT:** Truck-mounted CME 75, 8" Hollow Stem Auger, 140-lb Autohammer, SPT

**WATER LEVELS:** 8' **START:** 07/23/2004 1045 **FINISH:** 07/23/2004 1243 **LOGGER:** RSVP

| DEPTH BELOW | SAMPLE NUMBER | SAMPLE TYPE | SAMPLE RECOVERY (FT) | STANDARD PENETRATION TEST RESULTS 6"-6"-6" (N) | SOIL DESCRIPTION: SOIL NAME, USCS GROUP SYMBOL, COLOR, MOISTURE CONTENT, RELATIVE DENSITY OR CONSISTENCY, SOIL STRUCTURE, MINERALOGY | COMMENTS: DEPTH OF CASING, DRILLING RATE, DRILLING FLUID LOSS, TESTS AND INSTRUMENTATION |
|---|---|---|---|---|---|---|
| 0 | | | | | Ground Surface | Grinding to 1.5 |
| | | | | | **Silty Clay w/Sand, Gravel and Cobble (ML-C** Gray, dry, very stiff, subangular gravel & sand, angular cobbles to 6", (FILL), | 0 ppm |
| | WYK-S-PZ08-1.5 | SPT | 18" | 4-12-16 | **Silty Sand w/Gravel (SM)** Brown, moist, medium sand w/high fine silt content, gravel tp 3" in cuttings (fill) | 2.8 ppm |
| | WYK-S-PZ08-3.0 | SPT | 18" | 30-37-40 | **Silty Clay (CL-ML)** Gray-brown, moist, hard (pp=4.5+), with sand and trace gravel to 1", occasional sandier layers | 5.6 ppm |
| 5 | WYK-S-PZ08-4.5 | SPT | 18" | 21-30-35 | **POORLY GRADED GRAVEL (GP)** Brown, moist, dense, w/ sand | 3.6 ppm |
| | WYK-S-PZ08-6.0 | SPT | 18" | 13-24-26 | **Poorly Graded Sand w/Silt and Gravel (SP-S** Brown, moist, dense to very dense, fine to coarse, subangular to subrounded sand; subangular gravel to 3/4", less gravel with depth, grading to fine to medium sand | 3.6 ppm |
| | WYK-S-PZ08-7.5 | SPT | 18" | 28-30-30 | | 4.1 ppm |
| 10 | WYK-S-PZ08-9.0 | SPT | 18" | 20-24-30 | | 10.0 ppm *Sampler |
| | WYK-S-PZ08-10.5 | SPT | 18" | 23-30-31 | **POORLY GRADED SAND (SP)** Brown, moist, dense to very dense, fine sand, siltier layers (SM) present occasionally | 10.8 ppm |
| | WYK-S-PZ08-12.0 | SPT | 18" | 18-30-35 | **Silty Sand (SM)** Gray-brown, wet, dense, uniformfine/medium, subangular to subrounded sand | 2.8 ppm |
| | WYK-S-PZ08-13.5 | SPT | 18" | 31-38-40 | **Poorly Graded Sand w/Silt (SP-SM)** Gray-brown, wet, dense, uniform fine to medium sand, occasional very thin silty sand (SM) seams | 2.0 ppm |
| 15 | WYK-S-PZ08-15.0 | SPT | 12" | 32-50 | **Poorly Graded Sand w/Silt and Gravel (SP-S** Gray, wet, very dense, medium sand, subangular to subround gravel to 3/8" | 3.0 ppm |
| | WYK-S-PZ08-16.5 | SPT | 18" | 32-48-50\5" | **Gravely Sand w/Silt (SP-SM)** Gray, wet, very dense,medium to course, subangular to subround sand; subangular to subround gravel to 1/2" generally medium 1/4" range | 3.0 ppm |
| | WYK-S-PZ08-18.0 | SPT | 16" | 38-42-50 | | 4.0 ppm |
| 20 | WYK-S-PZ08-19.5 | SPT | 6"* | 30-36-42* | | 2.0 ppm |
| | WYK-S-PZ08-21.0 | SPT | 12" | 34-50\6" | **Poorly Graded Sand w/Silt (SP-SM)** Gray, wet, dense, fine sand | 5.0 ppm |
| | WYK-S-PZ08-22.5 | SPT | 14" | 18-20-32 | **Well Graded Sand (SW)** Gray, wet, dense, fine to coarse, subangular to subround sand; trace silt | 1.8 ppm |
| 25 | WYK-S-PZ08-24.0 | SPT | | 26-50\5" | **Poorly Graded Sand (SP)** Gray, wet, dense, trace silt, medium, subangular to subround sand;siltier w/depth, grades to (SP-SM) with occasional silty sand (SM) layers to 1" @ 30.5' and @ 31.2' | |
| 30 | | | | | | |

# DRAFT

PROJECT NUMBER: 316783 BORING NUMBER: PZ-08



# SOIL BORING LOG

**PROJECT:** Wyckoff **LOCATION:** clear area at edge of trees

**ELEVATION:** **DRILLING CONTRACTOR:** Cascade Drilling

**DRILLING METHOD AND EQUIPMENT:** Truck-mounted CME 75, 8" Hollow Stem Auger, 140-lb Autohammer, SPT

**WATER LEVELS:** 8' **START:** 07/23/2004 1045 **FINISH:** 07/23/2004 1243 **LOGGER:** RSVP

| DEPTH BELOW | SAMPLE NUMBER | SAMPLE TYPE | SAMPLE RECOVERY (FT) | STANDARD PENETRATION TEST RESULTS 6"-6"-6" (N) | SOIL DESCRIPTION: SOIL NAME, USCS GROUP SYMBOL, COLOR, MOISTURE CONTENT, RELATIVE DENSITY OR CONSISTENCY, SOIL STRUCTURE, MINERALOGY | COMMENTS: DEPTH OF CASING, DRILLING RATE, DRILLING FLUID LOSS, TESTS AND INSTRUMENTATION |
|---|---|---|---|---|---|---|
| | WYK-S-PZ08-30.0 | SPT | 18" | 30-42-50 | | |
| | | | | | End of Boring | |
| 35 | | | | | | |
| 40 | | | | | | |
| 45 | | | | | | |
| 50 | | | | | | |
| 55 | | | | | | |
| 60 | | | | | | |

Attachment B

# Boring Logs

## B.1 THE STANDARD PENETRATION TEST

The Standard Penetration Test (SPT) is performed by driving a standard split-barrel sampler 18 inches into undisturbed soil at the bottom of the borehole using a 140-pound guided hammer or ram, falling freely from a height of 30 inches. This test is conducted to obtain a measure of the resistance of the soil to penetration of the sampler and to retrieve a disturbed soil sample. The number of blows required to drive the sampler for three, 6-inch intervals, for a total of 18 inches, are observed and recorded on the soil boring log. The sum of the number of blows required to drive the sampler the second and third 6-inch intervals is considered the Standard Penetration Resistance or the SPT blowcount, N. If the sampler is driven less than 18 inches, but more than 1 foot, the SPT blowcount is that for the last 1 foot of penetration. If less than a foot is penetrated, the number of blows and the fraction of 1 foot penetrated are recorded in the boring logs.

The values of N provide a means for evaluating the relative density of granular (coarse-grained) soils and the consistency of cohesive (fine-grained) soils. Low N-values indicate soft or loose deposits, while high N-values are evidence of hard or dense materials. The criteria used for describing the relative density of coarse-grained soil and the consistency of fine-grained soils based on N-value are presented in Tables B-1 and B-2, respectively of this attachment. Field classification of the soil based on this criteria is incorporated in the boring logs presented in the following section.

**Table B-1 Relative Density of Coarse-Grained Soil (Developed from Sowers, 1979)**

| N (blows/ft) | Relative Density | Field Test |
|---|---|---|
| 0-4 | Very Loose | Easily penetrated with 1/2-in. steel rod Pushed by hand |
| 5-10 | Loose | Easily penetrated with 1/2-in. steel rod Pushed by hand |
| 11-30 | Medium | Easily penetrated with 1/2-in. steel rod Driven with 5-lb hammer |
| 31-50 | Dense | Penetrated a foot with ½-in. steel rod Driven with 5-lb hammer |
| 50+ | Very Dense | Penetrated only a few inches with 1/2-in. steel rod driven with 5-lb hammer |

**Table B-2 Consistency of Fine-Grained Soil (Developed from Sowers, 1979)**

| N (blows/ft) | Consistency | Field Test |
|---|---|---|
| < 2 | Very Soft | Easily penetrated several inches by fist |
| 2-4 | Soft | Easily penetrated several inches by thumb |
| 5-8 | Firm | Can be penetrated several inches by thumb with moderate effort |
| 9-15 | Stiff | Readily indented by thumb, but Penetrated only with great effort |
| 16-30 | Very Stiff | Readily indented by thumbnail |
| 30+ | Hard | Indented with difficulty by thumbnail |

## B.2 TEST BORING LOGS

The logs for test borings are given in the following pages of this attachment. Unified Classification System Symbols (USCS) symbols are marked with parentheses when the classification is based on visual classification alone. When USCS symbols are separated by commas, then the classification has been confirmed with laboratory testing.

The lines on the boring logs do not define contacts between different soil classifications. The lines are used to separate the descriptions for legibility purposes only.

CH2MHILL

**PROJECT NUMBER:** 316783.FI.03 **BORING NUMBER:** B-06-2005



# SOIL BORING LOG

**PROJECT:** Wyckoff RGWTP **LOCATION:** S side Boiler Bldg, N center of new bldg

**ELEVATION:** **DRILLING CONTRACTOR:** Cascade Drilling, Inc.

**DRILLING METHOD AND EQUIPMENT:** CME 75 truck, HSA, SPT, 140-lb automatic hammer

**WATER LEVELS:** None **START:** 02/03/2005 **FINISH:** 02/03/2005 **LOGGER:** S. McGinnis

| DEPTH BELOW GROUND SURFACE | SAMPLE NUMBER | SAMPLE TYPE | SAMPLE RECOVERY (IN) | STANDARD PENETRATION TEST RESULTS 6"-6"-6" (N) | SOIL DESCRIPTION: SOIL NAME, USCS GROUP SYMBOL, COLOR, MOISTURE CONTENT, RELATIVE DENSITY OR CONSISTENCY, SOIL STRUCTURE, MINERALOGY | COMMENTS: DEPTH OF CASING, DRILLING RATE, DRILLING FLUID LOSS, TESTS AND INSTRUMENTATION |
|---|---|---|---|---|---|---|
| 0 | | | | | Ground Surface | |
| | | | | | **Concrete 6"** | Before beginning drilling, BZ = 0.9 ppm |
| | | | | | **SILTY SAND WITH GRAVEL (SM)** Gray-brown, moist, fine sand, fine to coarse subrounded to angular gravel, est. 20-30% gravel (FILL) | |
| | S-1 | SS | 18 | 13-13-13 (26) | 2.5-3.5': **SILTY SAND (SM)**, gray-brown, moist, medium dense, fine sand, est. 15-20% fines | 3' Siltier cuttings and dark gray-dark brown |
| | | | | | 3.5-3.9': **SILT WITH GRAVEL (ML)**, dark brown and gray-brown mixed colors, fine gravel (FILL) | 4': Wood fibers in cuttings |
| | | | | | 3.9-4': Fiber material at contact with above, **POORLY GRADED SAND (SP)**, gray | 5.1': AQUITARD encountered |
| 5 | S-2 | SS | 17 | 10-18-28 (46) | 5.0-5.1': Sample A: **SILTY SAND (SM)**, gray-brown, moist, dense, fine sand, trace iron-oxide staining, fine sand lenses of gray sand | 5' BZ by hole = 0.9 ppm. Sample S-2A = 1.6ppm. Empty bag reads 1.3-1.7 ppm |
| | | | | | 5.1-6.5': Sample B: **CLAY WITH GRAVEL (CL)**, dark gray, moist, hard, fine rounded to subrounded gravel (GLACIAL TILL) | |
| | S-3 | SS | 18 | 16-25-33 (58) | Same as SAMPLE B from above **CLAY WITH GRAVEL (CL)**, dark gray, moist, hard, fine rounded to subrounded gravel (GLACIAL TILL) | 7': Sample 1.5 ppm in bag |
| | | | | | | Sample S-4 Test Results: WC = 9% %Gravel = 27.6 %Sand = 26.7 %Silt = 29.1 %Clay = 16.6 |
| 10 | S-4 | SS | 18 | 12-23-33 (56) | **SILTY GRAVEL WITH SAND, GM** Similar in appearance to above, gray, moist, very dense, fine rounded to subrounded gravel | |
| | S-5 | SS | 18 | 12-21-27 (48) | **CLAY WITH GRAVEL, CL** Similar in appearance to above, gray, moist, hard, fine rounded to subrounded gravel | 12.5': BZ by hole = 1.1 ppm |
| | | | | | | Sample S-5 Test Results: WC = 17% LL = 41 PL = 17 PI = 24 |
| 15 | | | | | | |

CH2MHILL

**PROJECT NUMBER:** 316783.FI.03 **BORING NUMBER:** B-06-2005
**Sheet:** 2 of 2

# SOIL BORING LOG

**PROJECT:** Wyckoff RGWTP **LOCATION:** S side Boiler Bldg, N center of new bldg
**ELEVATION:** **DRILLING CONTRACTOR:** Cascade Drilling, Inc.
**DRILLING METHOD AND EQUIPMENT:** CME 75 truck, HSA, SPT, 140-lb automatic hammer
**WATER LEVELS:** None **START:** 02/03/2005 **FINISH:** 02/03/2005 **LOGGER:** S. McGinnis

| DEPTH BELOW GROUND SURFACE | SAMPLE NUMBER | SAMPLE TYPE | SAMPLE RECOVERY (IN) | STANDARD PENETRATION TEST RESULTS 6"-6"-6" (N) | SOIL DESCRIPTION: SOIL NAME, USCS GROUP SYMBOL, COLOR, MOISTURE CONTENT, RELATIVE DENSITY OR CONSISTENCY, SOIL STRUCTURE, MINERALOGY | COMMENTS: DEPTH OF CASING, DRILLING RATE, DRILLING FLUID LOSS, TESTS AND INSTRUMENTATION |
|---|---|---|---|---|---|---|
| | S-6 | SS | 18 | 18-28-33 (61) | Same as above, one coarse subrounded gravel | |
| | | | | | | |
| | S-7 | SS | 17 | 19-27-30 (57) | Same as above, one coarse subrounded gravel | 17.5': BZ by hole = 1.1 ppm |
| | | | | | | |
| 20 | S-8 | SS | 18 | 18-21-35 (56) | Same as above, a little more coarse gravel | |
| | | | | | Bottom of Boring | Bottom of boring at 21.5' at 1527 on 2/3/2005. Groundwater not encountered while drilling. Backfilled boring with Pure Gold medium bentonite chips. |
| 25 | | | | | | |
| 30 | | | | | | |

CH2MHILL

**PROJECT NUMBER:** 316783.FI.03 **BORING NUMBER:** B-07-2005
**Sheet:** 1 of 2

# SOIL BORING LOG

**PROJECT:** Wyckoff RGWTP **LOCATION:** S side Boiler Bldg, S center of new bldg
**ELEVATION:** **DRILLING CONTRACTOR:** Cascade Drilling, Inc.
**DRILLING METHOD AND EQUIPMENT:** CME 75 truck, HSA, SPT, 140-lb automatic hammer
**WATER LEVELS:** None **START:** 02/03/2005 **FINISH:** 02/03/2005 **LOGGER:** S. McGinnis

| DEPTH BELOW GROUND SURFACE | SAMPLE NUMBER | SAMPLE TYPE | SAMPLE RECOVERY (IN) | STANDARD PENETRATION TEST RESULTS 6"-6"-6" (N) | SOIL DESCRIPTION: SOIL NAME, USCS GROUP SYMBOL, COLOR, MOISTURE CONTENT, RELATIVE DENSITY OR CONSISTENCY, SOIL STRUCTURE, MINERALOGY | COMMENTS: DEPTH OF CASING, DRILLING RATE, DRILLING FLUID LOSS, TESTS AND INSTRUMENTATION |
|---|---|---|---|---|---|---|
| 0 | | | | | Ground Surface | |
| | | | | | **Gravel** | Calibrated CH101107 MiniRae 2000 at 0805 on 2/3/05. Fresh air = 0.0 ppm, Isobut = 105 ppm |
| | | | | | **SILTY SAND (SM)** Gray-brown, moist, fine sand, fine subrounded to subangular gravel (FILL) | Driller reports crushed rock to 2' bgs. |
| | S-1 | SS | 15 | 10-8-14 (22) | **SILTY SAND WITH GRAVEL (SM)** Brown, becomes gray at 3.5', fine gravel | 2.5': BZ by boring = 0.2 ppm. Sample 0.8 ppm in bag. |
| | | | | | | 3.5': Gray cuttings, a thin layer of black colored soil. Old creosote smell-smells like moth balls. BZ = 0.4 ppm. AQUITARD encountered at 3.5'. |
| 5 | S-2 | SS | 18 | 11-15-21 (36) | **CLAY WITH GRAVEL, CL** Dark gray, moist, hard, est. 10% rounded to subrounded gravel, trace fine sand, fine to coarse but mostly fine gravel (GLACIAL TILL) | |
| | | | | | | 5': Sample 1.8 ppm in bag. Moth ball odor. BZ = 1.0 ppm. |
| | S-3 | SS | 16 | 25-30-30 (60) | Same as above | 7.5': Sample 1.7 ppm in open bag. Sample S-3 Test Results: WC = 11% LL = 30 PL = 15 PI = 15 |
| 10 | S-4 | SS | 15 | 18-38-50/3" (88/9") | Same as above | 10': 4.4 ppm in closed bag. Background BZ = 1.2 ppm. Reading may be due to moisture in bag. No odor observed. |
| | S-5 | SS | 14 | 26-40-48 (88) | Same as above | 12.5': BZ by boring = 1.3 ppm. Closed, empty ziplock bag reads 2.2 ppm. |
| 15 | | | | | | 15': Sample in open bag = 3.7 ppm |

CH2MHILL

**PROJECT NUMBER:** 316783.FI.03 **BORING NUMBER:** B-07-2005



# SOIL BORING LOG

**PROJECT:** Wyckoff RGWTP **LOCATION:** S side Boiler Bldg, S center of new bldg

**ELEVATION:** **DRILLING CONTRACTOR:** Cascade Drilling, Inc.

**DRILLING METHOD AND EQUIPMENT:** CME 75 truck, HSA, SPT, 140-lb automatic hammer

**WATER LEVELS:** None **START:** 02/03/2005 **FINISH:** 02/03/2005 **LOGGER:** S. McGinnis

| DEPTH BELOW GROUND SURFACE | SAMPLE NUMBER | SAMPLE TYPE | SAMPLE RECOVERY (IN) | STANDARD PENETRATION TEST RESULTS 6"-6"-6" (N) | SOIL DESCRIPTION: SOIL NAME, USCS GROUP SYMBOL, COLOR, MOISTURE CONTENT, RELATIVE DENSITY OR CONSISTENCY, SOIL STRUCTURE, MINERALOGY | COMMENTS: DEPTH OF CASING, DRILLING RATE, DRILLING FLUID LOSS, TESTS AND INSTRUMENTATION |
|---|---|---|---|---|---|---|
| | S-6 | SS | 17 | 14-28-35 (63) | Same as above | |
| | | | | | | |
| | S-7 | SS | 18 | 14-20-30 (50) | Same as above | 17.5': BZ by boring = 1.0 ppm |
| | | | | | | |
| 20 | S-8 | SS | 18 | 15-25-30 (55) | Same as above | 20': Sample in slightly open bag for 5 minutes = 7.1 ppm. Reading probably due to moisture in bag. |
| 25 | | | | | Bottom of Boring | Bottom of boring at 21.5' at 1017 on 2/3/2005. Groundwater not encountered while drilling. Backfilled boring with Pure Gold medium bentonite chips. |
| 30 | | | | | | |

CH2MHILL

**PROJECT NUMBER:** 316783.FI.03 **BORING NUMBER:** B-08-2005
**Sheet:** 1 of 2

# SOIL BORING LOG

**PROJECT:** Wyckoff RGWTP **LOCATION:** S side Boiler Bldg, SW side of new bldg
**ELEVATION:** **DRILLING CONTRACTOR:** Cascade Drilling, Inc.
**DRILLING METHOD AND EQUIPMENT:** CME 75 truck, HSA, SPT, 140-lb automatic hammer
**WATER LEVELS:** None **START:** 02/03/2005 **FINISH:** 02/03/2005 **LOGGER:** S. McGinnis

| DEPTH BELOW GROUND SURFACE | SAMPLE NUMBER | SAMPLE TYPE | SAMPLE RECOVERY (IN) | STANDARD PENETRATION TEST RESULTS 6"-6"-6" (N) | SOIL DESCRIPTION: SOIL NAME, USCS GROUP SYMBOL, COLOR, MOISTURE CONTENT, RELATIVE DENSITY OR CONSISTENCY, SOIL STRUCTURE, MINERALOGY | COMMENTS: DEPTH OF CASING, DRILLING RATE, DRILLING FLUID LOSS, TESTS AND INSTRUMENTATION |
|---|---|---|---|---|---|---|
| 0 | | | | | Ground Surface | |
| | | | | | **Gravel** | Background BZ before started drilling = 0.7 ppm |
| | | | | | **SILTY SAND WITH GRAVEL (SM)** Gray-brown, moist, fine sand, fine to coarse subrounded to subangular gravel (FILL) | |
| | S-1 | SS | 2 | 12-8-7 (15) | **SILTY SAND WITH GRAVEL (SM)** Poor recovery. Gray-brown, moist, medium dense, becomes gray in tip 4', rock jammed in shoe (FILL). At 4' becomes **SILT WITH GRAVEL (ML)**, dark gray, trace sand (GLACIAL TILL) | 2.5': BZ at boring = 0.8 ppm<br>4': Silty cuttings<br>4.5': Gray cuttings, no odor observed. AQUITARD encountered at 4.5'. |
| 5 | S-2 | SS | 16 | 9-12-24 (35) | **SANDY SILT, ML** Dark gray, moist, hard, fine rounded to subrounded gravel, fine sand (GLACIAL TILL) | 5': Sample 1.3 ppm in open bag. Reads 1.3 ppm in empty bag<br>Sample S-2 Test Results:<br>WC = 14%<br>%Gravel = 5.0<br>%Sand = 25.5<br>%Silt = 42.6<br>%Clay = 26.9 |
| | S-3 | SS | 15 | 12-15-24 (39) | Same as above but with scattered fine sand pockets/lenses at 8' and below, at 8.5' grades to light brown with trace iron-oxide staining | 7.5' Sample, no sand in shoe. Contact below 9'. |
| 10 | S-4 | SS | 18 | 24-36-45 (81) | **POORLY GRADED SAND (SP)** Gray, wet, very dense, fine sand, black and white grains | 10': BZ by boring 1.0 ppm. Sample at 10' had ~2' of water on sampler. |
| | S-5 | SS | 18 | 32-50/6" (82/12") | 12.5-13': Sample A: Same as above<br>13-13.5': Sample B: **WELL GRADED SAND WITH GRAVEL (SW)**, gray, wet, very dense, fine sand, fine to coarse subrounded to subangular gravel | 12.5': Sampler wet. Driller reports no heave. 4.3 ppm in closed bag possibly due to moisture? No odor observed. |
| 15 | | | | | | |

CH2MHILL

**PROJECT NUMBER:** 316783.FI.03 **BORING NUMBER:** B-08-2005
**Sheet:** 2 of 2

# SOIL BORING LOG

**PROJECT:** Wyckoff RGWTP **LOCATION:** S side Boiler Bldg, SW side of new bldg
**ELEVATION:** **DRILLING CONTRACTOR:** Cascade Drilling, Inc.
**DRILLING METHOD AND EQUIPMENT:** CME 75 truck, HSA, SPT, 140-lb automatic hammer
**WATER LEVELS:** None **START:** 02/03/2005 **FINISH:** 02/03/2005 **LOGGER:** S. McGinnis

| DEPTH BELOW GROUND SURFACE | SAMPLE NUMBER | SAMPLE TYPE | SAMPLE RECOVERY (IN) | STANDARD PENETRATION TEST RESULTS 6"-6"-6" (N) | SOIL DESCRIPTION: SOIL NAME, USCS GROUP SYMBOL, COLOR, MOISTURE CONTENT, RELATIVE DENSITY OR CONSISTENCY, SOIL STRUCTURE, MINERALOGY | COMMENTS: DEPTH OF CASING, DRILLING RATE, DRILLING FLUID LOSS, TESTS AND INSTRUMENTATION |
|---|---|---|---|---|---|---|
| | S-6 | SS | 18 | 18-28-40 (68) | **POORLY GRADED SAND (SP)** Gray, wet, very dense, fine sand, thin seams of light gray very fine sand | 15': 5" of heave in sampler (sampler full) |
| | | | | | | |
| | S-7 | SS | 18 | 24-34-48 (82) | Similar to above but fewer thin seam of very fine sand | |
| | | | | | | |
| 20 | S-8 | SS | 18 | 31-40-50 (90) | Same as above | 20': 6" heave in sampler (sampler full) |
| | | | | | Bottom of Boring | Bottom of boring at 21.5' at 1144 on 2/3/2005. Groundwater encountered at 9.5' bgs while drilling. Backfilled boring with Pure Gold medium bentonite chips. |
| 25 | | | | | | |
| 30 | | | | | | |

CH2MHILL

**PROJECT NUMBER:** 316783.FI.03 **BORING NUMBER:** B-09-2005
**Sheet:** 1 of 2

# SOIL BORING LOG

**PROJECT:** Wyckoff RGWTP **LOCATION:** S side Boiler Bldg, SE side of new bldg
**ELEVATION:** **DRILLING CONTRACTOR:** Cascade Drilling, Inc.
**DRILLING METHOD AND EQUIPMENT:** CME 75 truck, HSA, SPT, 140-lb automatic hammer
**WATER LEVELS:** None **START:** 02/03/2005 **FINISH:** 02/03/2005 **LOGGER:** S. McGinnis

| DEPTH BELOW GROUND SURFACE | SAMPLE NUMBER | SAMPLE TYPE | SAMPLE RECOVERY (IN) | STANDARD PENETRATION TEST RESULTS 6"-6"-6" (N) | SOIL DESCRIPTION: SOIL NAME, USCS GROUP SYMBOL, COLOR, MOISTURE CONTENT, RELATIVE DENSITY OR CONSISTENCY, SOIL STRUCTURE, MINERALOGY | COMMENTS: DEPTH OF CASING, DRILLING RATE, DRILLING FLUID LOSS, TESTS AND INSTRUMENTATION |
|---|---|---|---|---|---|---|
| 0 | | | | | Ground Surface | |
| | | | | | **Gravel** | Background BZ before started drilling = 0.8 ppm |
| | | | | | **SILTY SAND WITH GRAVEL (SM)** Gray-brown, moist, fine sand (FILL) | Odor not observed in samples |
| | S-1 | SS | 13 | 7-8-13 (21) | **SILTY SAND (SM)** Gray-brown, moist, medium dense, fine sand, fiber material at contact with gray soil, becomes gray SILTY SAND (SM) at 3.5', then 3.8' **SILT (ML)** dark gray | |
| | | | | | | 4': Gray cuttings. AQUITARD encountered |
| 5 | S-2 | SS | 13 | 10-15-35 (50) | **SILTY SAND WITH GRAVEL, SM** Dark gray, moist, very dense, fine sand, fine rounded to subrounded gravel (GLACIAL TILL) | 5': Sample 1.8 ppm in bag<br>Sample S-2 Test Results:<br>WC = 10%<br>%Gravel = 16.4<br>%Sand = 33.7<br>%Silt = 31.5<br>%Clay = 18.4 |
| | S-3 | SS | 12 | 7-14-20 (34) | Same as above | |
| 10 | S-4 | SS | 14 | 10-20-22 (42) | Same as above but fine to coarse rounded to subrounded gravel, one gravel shattered in sampler | 10': BZ by boring 1.0 ppm. Sample at 10' had ~2' of water on sampler. |
| | S-5 | SS | 16 | 18-28-36 (64) | Same as 10' sample | |
| 15 | | | | | | 15': Sample 1.8 ppm in bag |

CH2MHILL

**PROJECT NUMBER:** 316783.FI.03 **BORING NUMBER:** B-09-2005
**Sheet:** 2 of 2

# SOIL BORING LOG

**PROJECT:** Wyckoff RGWTP **LOCATION:** S side Boiler Bldg, SE side of new bldg
**ELEVATION:** **DRILLING CONTRACTOR:** Cascade Drilling, Inc.
**DRILLING METHOD AND EQUIPMENT:** CME 75 truck, HSA, SPT, 140-lb automatic hammer
**WATER LEVELS:** None **START:** 02/03/2005 **FINISH:** 02/03/2005 **LOGGER:** S. McGinnis

| DEPTH BELOW GROUND SURFACE | SAMPLE NUMBER | SAMPLE TYPE | SAMPLE RECOVERY (IN) | STANDARD PENETRATION TEST RESULTS 6"-6"-6" (N) | SOIL DESCRIPTION: SOIL NAME, USCS GROUP SYMBOL, COLOR, MOISTURE CONTENT, RELATIVE DENSITY OR CONSISTENCY, SOIL STRUCTURE, MINERALOGY | COMMENTS: DEPTH OF CASING, DRILLING RATE, DRILLING FLUID LOSS, TESTS AND INSTRUMENTATION |
|---|---|---|---|---|---|---|
| | S-6 | SS | 16 | 20-35-40 (75) | Same as above | |
| | | | | | | |
| | S-7 | SS | 18 | 13-34-36 (70) | Same as above | |
| | | | | | | |
| 20 | S-8 | SS | 18 | 15-21-35 (56) | Same as above, but only fine rounded to subrounded gravel | 20': BZ = 0.9 ppm |
| | | | | | Bottom of Boring | Bottom of boring at 21.5' at 1344 on 2/3/2005. Groundwater not encountered while drilling. Backfilled boring with Pure Gold medium bentonite chips. |
| 25 | | | | | | |
| 30 | | | | | | |

CH2MHILL

**PROJECT NUMBER:** 316783.FI.03 **BORING NUMBER:** B-10-2005
**Sheet:** 1 of 2

# SOIL BORING LOG

**PROJECT:** Wyckoff RGWTP **LOCATION:** S side Boiler Bldg, NW corner of sump
**ELEVATION:** **DRILLING CONTRACTOR:** Cascade Drilling, Inc.
**DRILLING METHOD AND EQUIPMENT:** CME 75 truck, HSA, SPT, 140-lb automatic hammer
**WATER LEVELS:** None **START:** 02/04/2005 **FINISH:** 02/04/2005 **LOGGER:** S. McGinnis

| DEPTH BELOW GROUND SURFACE | SAMPLE NUMBER | SAMPLE TYPE | SAMPLE RECOVERY (IN) | STANDARD PENETRATION TEST RESULTS 6"-6"-6" (N) | SOIL DESCRIPTION: SOIL NAME, USCS GROUP SYMBOL, COLOR, MOISTURE CONTENT, RELATIVE DENSITY OR CONSISTENCY, SOIL STRUCTURE, MINERALOGY | COMMENTS: DEPTH OF CASING, DRILLING RATE, DRILLING FLUID LOSS, TESTS AND INSTRUMENTATION |
|---|---|---|---|---|---|---|
| 0 | | | | | Ground Surface<br>**Gravel** | BZ at boring before started drilling = 0.0 ppm |
| | S-1 | SS | 8 | 15-19-15 (34) | 2.5-3': Sample A: **SILTY SAND WITH GRAVEL (SM)**, gray-brown, moist, dense<br>3-4': Sample B: **POORLY GRADED SAND (SP)**, gray, moist, dense, fine sand, black and white grains (NATIVE) | 2.5': After sample BZ at boring = 0.1 ppm<br>Gray cuttings observed between 2.5 and 3'. AQUITARD encountered at 3'. |
| 5 | S-2 | SS | 16 | 6-12-15 (27) | 5-5.3': Sample A: **SILTY SAND/POORLY GRADED SAND WITH SILT (SM/SP-SM)**, gray with iron-oxide staining, moist, medium dense, fine sand, ets.t 10-15% fines<br>5.3-6.5': Sample B: **CLAY WITH GRAVEL (CL)**, light brown-gray, grades to dark gray at 5.5', moist, very stiff, fine rounded to subrounded gravel, trace fine sand, est. 10-15% gravel (GLACIAL TILL) | 5': Sample B 0.2 ppm in bag. BZ = 0.1 ppm. |
| | S-3 | SS | 17 | 13-19-21 (40) | Same as 5.3-6.5' sample | 7.5': BZ by boring fluctuates between 0.1 and 0.2 ppm |
| 10 | S-4 | SS | 18 | 13-18-21 (39) | **CLAY WITH GRAVEL, CL**<br>Similar in appearance to above, gray, moist, hard, fine rounded to subrounded gravel | 10': Sample 1.1 ppm in bag. Due to moisture? No odor observed,<br>Sample S-4 Test Results:<br>WC = 14%<br>LL = 39 PL = 15 PI = 24 |
| | S-5 | SS | 18 | 16-22-28 (50) | Same as above | 12.5': BZ by hole 0.4 ppm. Background is 0.4 ppm. |
| 15 | | | | | | |

CH2MHILL

**PROJECT NUMBER:** 316783.FI.03 **BORING NUMBER:** B-10-2005
**Sheet:** 2 of 2

# SOIL BORING LOG

**PROJECT:** Wyckoff RGWTP **LOCATION:** S side Boiler Bldg, NW corner of sump
**ELEVATION:** **DRILLING CONTRACTOR:** Cascade Drilling, Inc.
**DRILLING METHOD AND EQUIPMENT:** CME 75 truck, HSA, SPT, 140-lb automatic hammer
**WATER LEVELS:** None **START:** 02/04/2005 **FINISH:** 02/04/2005 **LOGGER:** S. McGinnis

| DEPTH BELOW GROUND SURFACE | SAMPLE NUMBER | SAMPLE TYPE | SAMPLE RECOVERY (IN) | STANDARD PENETRATION TEST RESULTS 6"-6"-6" (N) | SOIL DESCRIPTION: SOIL NAME, USCS GROUP SYMBOL, COLOR, MOISTURE CONTENT, RELATIVE DENSITY OR CONSISTENCY, SOIL STRUCTURE, MINERALOGY | COMMENTS: DEPTH OF CASING, DRILLING RATE, DRILLING FLUID LOSS, TESTS AND INSTRUMENTATION |
|---|---|---|---|---|---|---|
| | S-6 | SS | 18 | 12-18-28 (46) | Same as above | 15': Background reading 1.1 ppm. Sample 1.2 ppm in bag. |
| | | | | | | |
| | S-7 | SS | 17 | 12-16-321 (37) | Same as above | 17.5': BZ by boring 1.1 ppm |
| | | | | | | |
| 20 | S-8 | SS | 18 | 13-17-22 (39) | Same as above | |
| | | | | | Bottom of Boring | Bottom of boring at 21.5' at 0952 on 2/4/2005. Groundwater not encountered while drilling. Backfilled boring with Pure Gold medium bentonite chips. |
| 25 | | | | | | |
| 30 | | | | | | |

Attachment C

# Laboratory Testing Results

# LABORATORY TESTING PROGRAM

GeoEngineers, of Redmond, Washington performed laboratory testing that included natural moisture content, grain size analyses, and Atterberg Limits. The results of the laboratory tests are summarized in Table 1 and are also incorporated in the soil boring logs in Attachment B of this Technical Memorandum. Brief descriptions of the various laboratory tests follow.

## C.1 VISUAL DESCRIPTION

The visual description of soils allows convenient and consistent comparison of soils using a standard method for describing the soil. The use of this method of classification provides a basis for comparison of soils from widespread geographic areas. Visual classification of soils was performed in general accordance with ASTM D 2488.

## C.2 NATURAL MOISTURE CONTENT TEST

The natural moisture content test determines the weight of water contained in a given weight of soil. The results are usually presented as the weight of water divided by the weight of dry solids, expressed as a percentage. Moisture content (along with unit weight and specific gravity of solids) provides the basis for determining the phase relationships of a soil and may be useful in estimating soil consistency, compressibility, and strength. Natural moisture content was determined in general accordance with ASTM D 2216.

## C.3 GRAIN SIZE (SIEVE) ANALYSES

Grain size, or sieve, analyses were conducted in general accordance with ASTM D 422, Standard Method for particle Size Analysis of Soils. The lab procedure includes (a) mechanical sieve analysis for samples estimated to contain less than 50 percent fines (material passing the No. 200 sieve), and (b) combined (sieve and hydrometer) analysis for samples estimated to have at least 50 percent fines content. The sieve analysis consists of shaking soil through a stack of progressively smaller opening screens, each with known opening size and determining the portion (by weight) of particles retained on each sieve. They hydrometer analysis is based on Stoke's law for the velocity of a freely falling sphere. The method involves determining the settling rate of soil particles by measuring the density of the soil water solution and calculating the particle size in suspension at particular time intervals.

## C.4 PERCENT PASSING SIEVE NO. 200

Percent passing sieve No. 200 (P200) is usually conducted when the percentage of fines contained in the sample is required. This test is conducted by washing a representative soil sample of known weight through sieve No. 200. The soil retained on the sieve is then oven-dried and weighed. The percentage passing (by weight) of the sample through sieve No. 200 can then be calculated based on this information. This test was conducted in general accordance with ASTM D 1140.

## C.5 ATTERBERG LIMITS TESTS

Atterberg Limits test were determined in accordance with ASTM D4318. The test includes liquid limit (LL), plastic limit (PL) and plasticity index (PI). iquid limit is the moisture

content at which a soil behaves as a liquid and flows to close a standard groove when subjected to 25 blows of a standard device. Plastic limit is the moisture content at which the soils becomes plastic as demonstrated by causing incipient crumbling to occur in the soil when it is rolled into one-eighth-inch threads. Plasticity index represents the range of water content at which the soil behaves like plastic and is obtained as the difference between the liquid limit and plastic limit.

## C.6 SOIL CLASSIFICATION SYSTEMS

Soil classification systems attempt to group soil with similar engineering behavior based on index tests. A number of classification systems have been developed, usually for a specific application. The system most generally accepted for a wide range of engineering application is the Unified Soil Classification System (USCS). Soil classification systems generally use index test methods (particle size analysis and Atterberg limits) to permit rational grouping of the soil. Laboratory classification of soil was performed in general accordance with ASTM D 2487. The corrected USCS classifications can be identified from the exploration logs as those not enclosed in parenthesis.

Moisture Contents
Table 1

| Exploration Number | Sample Number | Sample Depth (ft) | Moisture Content % |
|---|---|---|---|
| B-06 | S-4 | 10.0 | 9 |
| B-06 | S-5 | 12.5 | 17 |
| B-07 | S-3 | 7.5 | 11 |
| B-08 | S-2 | 5.0 | 14 |
| B-09 | S-2 | 5.0 | 10 |
| B-10 | S-4 | 10.0 | 14 |

Project : CH2M Hill Wyckoff RCWTP 316783.FL.03
Project No. : 05-2057
Location :
Date : Fri Feb 18 2005

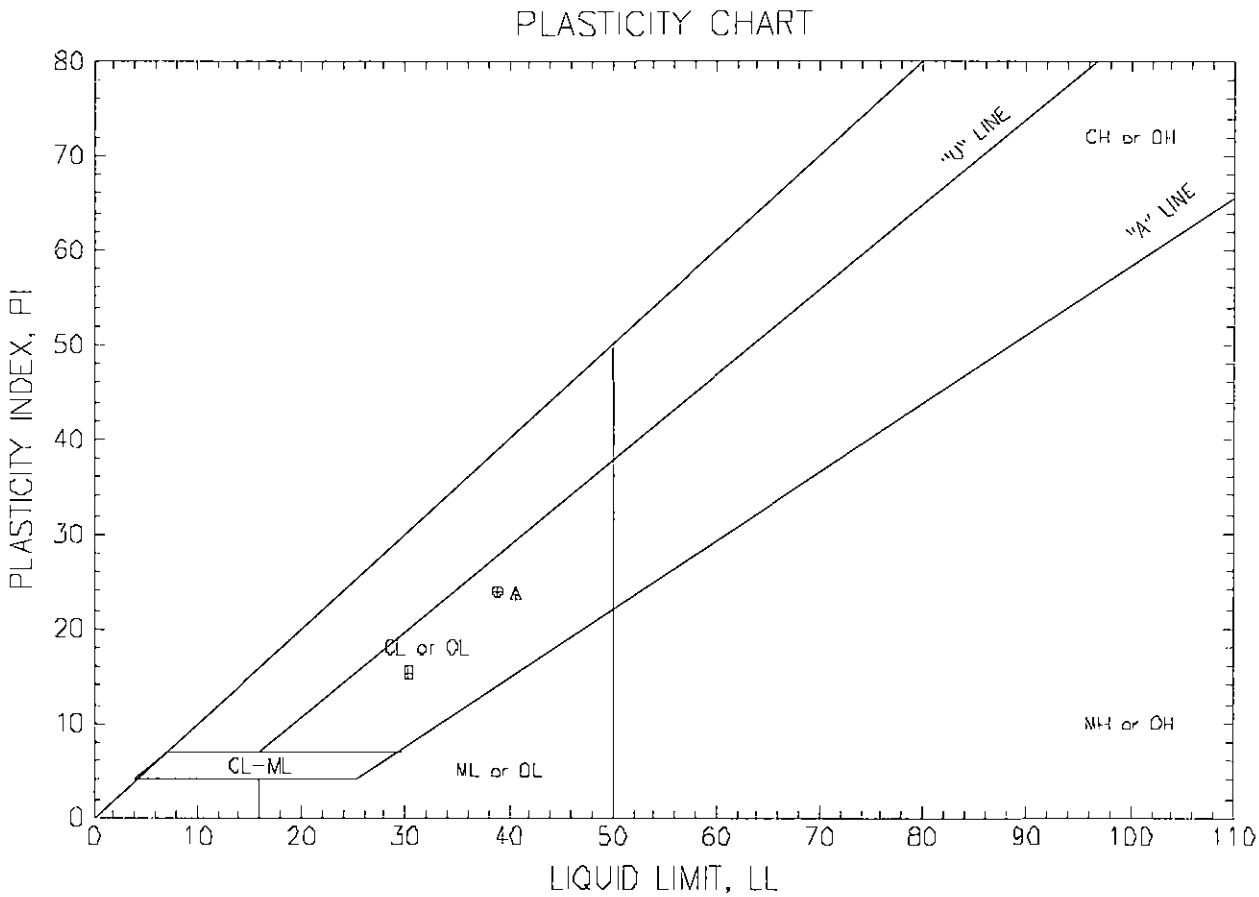


| Symbol | Sample Number | Water Content | Liquid Limit | Plastic Limit | Plasticity Index | Soil Classification |
|---|---|---|---|---|---|---|
| ○ | B10 S4 | 14 | 39 | 15 | 24 | 24 |
| △ | B6 S5 | 17 | 41 | 17 | 24 | 24 |
| □ | B7 S3 | 11 | 30 | 15 | 15 | 15 |

Figure 1

# Particle Size Distribution Report

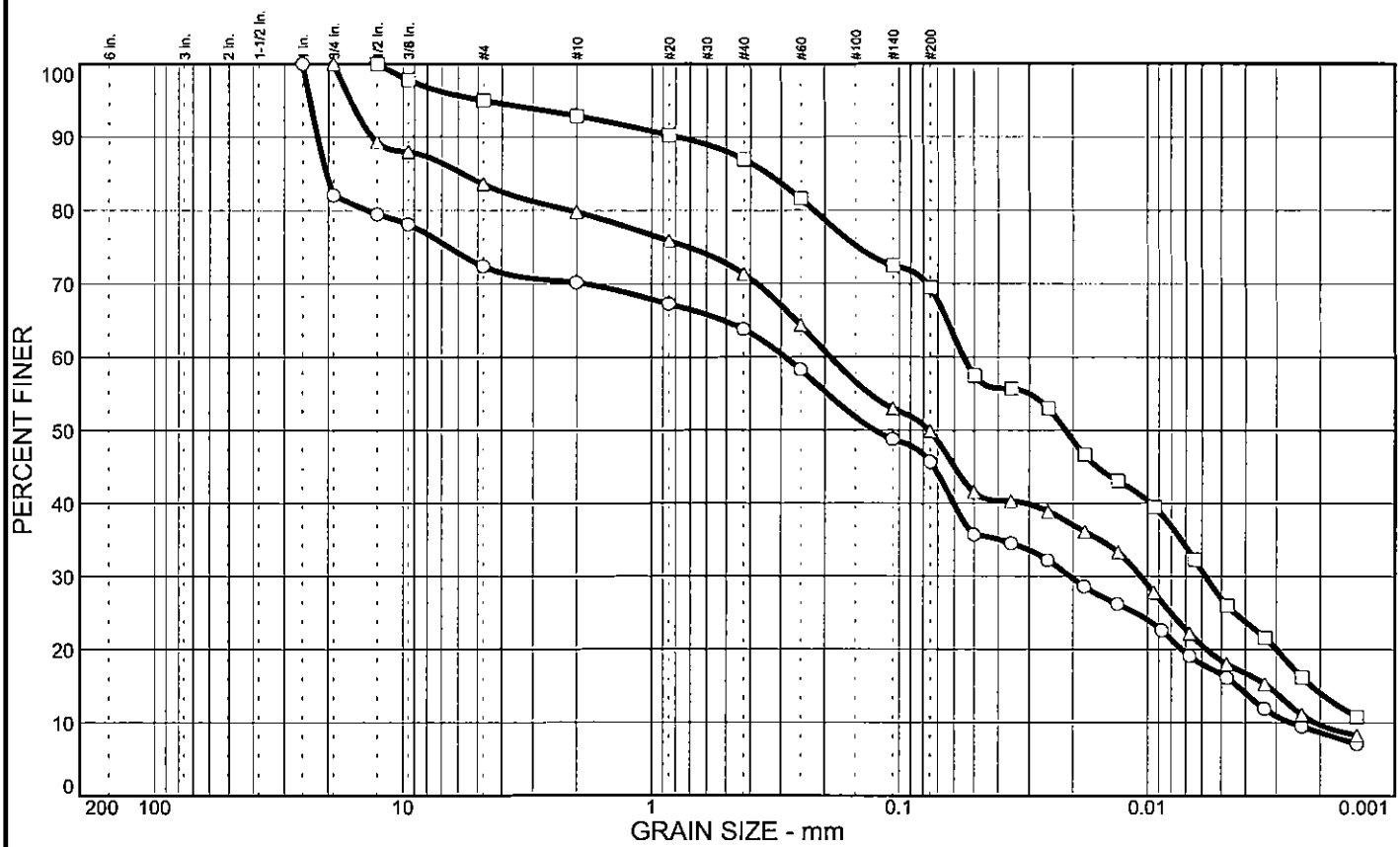


| | % COBBLES | % GRAVEL | % SAND | % SILT | % CLAY | USCS | AASHTO | PL | LL |
|---|---|---|---|---|---|---|---|---|---|
| ○ | | 27.6 | 26.7 | 29.1 | 16.6 | GM | | | |
| □ | | 5.0 | 25.5 | 42.6 | 26.9 | ML | | | |
| △ | | 16.4 | 33.7 | 31.5 | 18.4 | SM | | | |

| SIEVE inches size | PERCENT FINER ○ | PERCENT FINER □ | PERCENT FINER △ |
|---|---|---|---|
| 1 | 100.0 | | |
| .75 | 82.1 | | 100.0 |
| .5 | 79.5 | 100.0 | 89.3 |
| .375 | 78.1 | 97.8 | 88.0 |
| | GRAIN SIZE | | |
| $D_{60}$ | 0.288 | 0.0550 | 0.188 |
| $D_{30}$ | 0.0206 | 0.0058 | 0.0107 |
| $D_{10}$ | 0.0026 | | 0.0021 |
| | COEFFICIENTS | | |
| $C_c$ | 0.57 | | 0.29 |
| $C_u$ | 110.51 | | 90.06 |

| SIEVE number size | PERCENT FINER ○ | PERCENT FINER □ | PERCENT FINER △ |
|---|---|---|---|
| #4 | 72.4 | 95.0 | 83.6 |
| #10 | 70.2 | 92.9 | 79.8 |
| #20 | 67.3 | 90.3 | 75.9 |
| #40 | 63.8 | 87.0 | 71.4 |
| #60 | 58.3 | 81.6 | 64.4 |
| #140 | 48.8 | 72.5 | 53.0 |
| #200 | 45.7 | 69.5 | 49.9 |

SOIL DESCRIPTION

○ Silty gravel with sand

□ Sandy silt

△ Silty sand with gravel

REMARKS:

○ Classification based on grainsize only

□ Classification based on grainsize only

△ Classification based on grainsize only

○ Source: B-06 Sample No.: S-4 Elev./Depth: 10

□ Source: B-08 Sample No.: S-2 Elev./Depth: 5.0

△ Source: B-09 Sample No.: S-2 Elev./Depth: 5.0

**SOIL TECHNOLOGY, INC.**

Client: CH2M Hill

Project: Wyckoff RGWTP 316783.FL.03

Project No.: 05-2057

Plate 1

# SECTION 01010
# SUMMARY OF WORK

## PART 1 GENERAL

### 1.01 WORK COVERED BY CONTRACT DOCUMENTS

A. The Wyckoff Replacement Groundwater Treatment Plant (RGWTP) is designed to remove free oil/product, polynuclear aromatic hydrocarbons (PAHs), and pentachlorophenol (PCP) from groundwater pumped to the treatment plant from existing groundwater extraction wells. In addition to extracted groundwater, the RGWTP will also treat stormwater that falls on decontamination and containment pads associated with the existing and new treatment plants.

B. The completed Work will provide Owner with Groundwater Treatment Plant and includes building modifications, flow equalization, dissolved air flotation, media filtration, activated carbon adsorption, solid digestion, solids filter press dewatering, and process support systems. The work also includes furnishing and installing related equipment, disassembly, relocation, and reassembly of Owner-furnished products, piping, fabricated metalwork, painting, electrical, heating and ventilating, plumbing, instrumentation and control, sitework, and other appurtenances necessary to complete the work. Demolition activities include building slab removal, modifications to architectural features, and other items specified in the Drawings.

### 1.02 OWNER-FURNISHED PRODUCTS

A. Refer to Section 01645, Owner-Furnished Products.

## PART 2 PRODUCTS (NOT USED)

## PART 3 EXECUTION (NOT USED)

**END OF SECTION**

# SECTION 01025
# MEASUREMENT AND PAYMENT

## PART 1 GENERAL

### 1.01 SUBMITTALS

A. Informational Submittals:

1. Schedule of Values.
2. Schedule of Estimated Progress Payments:
   a. Submit with initially acceptable Schedule of Values.
   b. Submit adjustments thereto with Application for Payment.
3. Application for Payment.
4. Final Application for Payment.

### 1.02 SCHEDULE OF VALUES

A. Prepare a separate Schedule of Values for each schedule of the Work under the Agreement.

B. Upon request of Engineer, provide support documentation to support the accuracy of the Schedule of Values.

C. Unit Price Work: Reflect unit price quantity and price breakdown from conformed Bid Form.

D. Lump Sum Work:

1. Provide Schedule of Values including specified allowances, alternates, and equipment selected by Owner, as applicable.
2. List bonds and insurance premiums, mobilization, demobilization, preliminary and detailed progress schedule preparation, facility startup, and contract closeout separately.

E. An unbalanced or front-end loaded schedule will not be acceptable.

F. Summation of the complete Schedule of Values representing all the Work shall equal the Contract Price.

### 1.03 SCHEDULE OF ESTIMATED PROGRESS PAYMENTS

A. Show estimated payment requests throughout Contract Times aggregating initial Contract Price.

B. Base estimated progress payments on initially acceptable progress schedule. Adjust to reflect subsequent adjustments in progress schedule and Contract Price as reflected by modifications to the Contract Documents.

1.04 APPLICATION FOR PAYMENT

A. Transmittal Summary Form: Attach one Summary Form with each detailed Application for Payment for each schedule and include Request for Payment of Materials and Equipment on Hand as applicable. Execute certification by authorized officer of Contractor.

B. Application for Payment shall be in accordance with the General Clauses.

C. Provide separate form for each schedule as applicable.

D. Include accepted Schedule of Values for each schedule or portion of Work, the unit price breakdown for the Work to be paid on unit price basis, a listing of Owner-selected equipment, if applicable, and allowances, as appropriate.

E. Preparation:

1. Round values to nearest dollar.
2. List each Change Order executed prior to date of submission as separate line item. Totals to equal those shown on the Transmittal Summary Form for each schedule as applicable.
3. Submit Application for Payment, including a Transmittal Summary Form and detailed Application for Payment Form(s) for each schedule as applicable, a listing of materials on hand for each schedule as applicable, and such supporting data as may be requested by Engineer.

1.05 MEASUREMENT—GENERAL

A. Weighing, measuring, and metering devices used to measure quantity of materials for Work shall be suitable for purpose intended and conform to tolerances and specifications as specified in National Institute of Standards and Technology, Handbook 44.

B. Whenever pay quantities of material are determined by weight, material shall be weighed on scales furnished by Contractor and certified accurate by state agency responsible. Weight or load slip shall be obtained from weigher and delivered to Owner's representative at point of delivery of material.

C. If material is shipped by rail, car weights will be accepted provided that actual weight of material only will be paid for and not minimum car weight used for assessing freight tariff, and provided further that car weights will not be acceptable for material to be passed through mixing plants.

D. Vehicles used to haul material being paid for by weight shall be weighed empty daily and at such additional times as required by Engineer. Each vehicle shall bear a plainly legible identification mark.

E. Materials that are specified for measurement by the cubic yard measured in the vehicle shall be hauled in vehicles of such type and size that actual contents may be readily and accurately determined. Unless all vehicles are of uniform capacity, each vehicle must bear a plainly legible identification mark indicating its water level capacity. Vehicles shall be loaded to at least their water level capacity. Loads hauled in vehicles not meeting above requirements or loads of a quantity less than the capacity of the vehicle, measured after being leveled off as above provided, will be subject to rejection, and no compensation will be allowed for such material.

F. Quantities Based on Profile Elevations: Existing ground profiles shown on Drawings were taken from a topographic map drawn with contour intervals of 1 foot with supplementary spot elevations to nearest half foot.

G. Quantities will be based on ground profiles shown. Field surveys will not be made to confirm accuracy of elevations shown.

H. Where measurement of quantities depends on elevation of existing ground, elevations obtained during construction will be compared with those shown on Drawings. Variations of 1 foot or less will be ignored, and profiles shown on Drawings will be used for determining quantities.

I. Units of measure shown on Bid Form shall be as follows, unless specified otherwise.

| Item | Method of Measurement |
|---|---|
| AC | Acre—Field Measure by Engineer |
| CY | Cubic Yard—Field Measure by Engineer within limits specified or shown |
| CY-VM | Cubic Yard—Measured in Vehicle by Volume |
| EA | Each—Field Count by Engineer |
| GAL | Gallon—Field Measure by Engineer |
| HR | Hour |
| LB | Pound(s)—Weight Measure by Scale |
| LF | Linear Foot—Field Measure by Engineer |
| MFBM | Thousand Foot Board Measure—Delivery Invoice |
| SF | Square Foot |

| Item | Method of Measurement |
|---|---|
| SY | Square Yard |
| TON | Ton—Weight Measure by Scale (2,000 pounds) |

1.06 PAYMENT

A. General:

1. Progress payments will be made monthly.
2. The date for Contractor's submission of monthly Application for Payment shall be established at the Preconstruction Conference.

B. Payment for Lump Sum Work covers all Work specified or shown within the limits or Specification sections as follows:

1. Limits of Work are as shown on the Drawings.
2. Limits of Work are as defined in Section 01010, Summary of Work.
3. All Work shown on Drawings and in Specification section(s), except Section 02315, Excavation:

C. Payment for unit price items covers all the labor, materials, and services necessary to furnish and install the following items.

| ITEM | DESCRIPTION |
|---|---|
| Excavation of Contaminated Material (CY) | Includes excavation, disposal of excavated contaminated material and providing imported backfill, backfill compaction, surface restoration, and associated Work as specified in Section 02315, Excavation. Anticipated quantity is less than 100 CY. |

1.07 NONPAYMENT FOR REJECTED OR UNUSED PRODUCTS

A. Payment will not be made for following:

1. Loading, hauling, and disposing of rejected material.
2. Quantities of material wasted or disposed of in manner not called for under Contract Documents.
3. Rejected loads of material, including material rejected after it has been placed by reason of failure of Contractor to conform to provisions of Contract Documents.
4. Material not unloaded from transporting vehicle.
5. Defective Work not accepted by Owner.
6. Material remaining on hand after completion of Work.

1.08 PARTIAL PAYMENT FOR STORED MATERIALS AND EQUIPMENT

A. Partial Payment: No partial payments will be made for materials and equipment delivered or stored unless Shop Drawings or preliminary operation and maintenance manuals are acceptable to Engineer.

B. Final Payment: Will be made only for products incorporated in Work; remaining products, for which partial payments have been made, shall revert to Contractor unless otherwise agreed, and partial payments made for those items will be deducted from final payment.

**PART 2 PRODUCTS (NOT USED)**

**PART 3 EXECUTION (NOT USED)**

**END OF SECTION**

# SECTION 01040
# COORDINATION

## PART 1 GENERAL

### 1.01 RELATED WORK AT SITE

A. General: Coordinate all work with Owner and plant operations to minimize impacts to existing plant and site operations.

B. Applications Software Development:

1. Engineer will perform programming of applications software for certain portions of Process Instrumentation and Control Subsystem.
   a. Refer to Section 13400, Process Instrumentation and Control Systems (PICS), for definition of portions for which Engineer will perform programming of applications software.
2. Early Delivery of Programmable Logic Controller (PLC) Equipment:
   a. Schedule delivery of PLC equipment to Engineer's Corvallis, Oregon, facility as part of PICS portion of Progress Schedule.
      1) Facility Address and Contact Information:
         CH2M HILL
         Attn: Kim Anderson, P.E.
         2300 N.W. Walnut Blvd.
         Corvallis, OR 97330-0428
         541/768-3432
   b. Allow a minimum of 40 days, excluding weekends (Saturdays and Sundays), and recognized holidays, for PLC programming and configuration of Engineer's facility.
3. Sequencing:
   a. Include sequencing constraints specified herein as part of Progress Schedule.
   b. Allowance for interruptions to the Work due to testing by Engineer of Engineer developed applications software:
      1) During Functional Testing and Performance Testing, Contractor shall plan for interruption of testing of the Work to allow Engineer to investigate software problems, make software configuration changes, and conduct additional testing.
      2) Allowance for Interruptions: 20 days total.
      3) When applications software testing is delayed due to altered equipment interfaces or receipt of incorrect Shop Drawing information, duration of delay will be excluded from

interruption allowance, unless notified otherwise by Engineer.

C. Demolition by Others: Demolition by others will be completed prior to Contractor mobilization to the site.

1.02 DEFINITIONS

A. Days: Working days not including weekends and recognized holidays.

1.03 OWNER-FURNISHED PRODUCTS

A. Refer to Section 01645, Owner-Furnished Products.

1.04 UTILITY NOTIFICATION AND COORDINATION

A. Coordinate the Work with various utilities within Project limits. Notify applicable utilities prior to commencing Work, if damage occurs, or if conflicts or emergencies arise during Work.

1. Bainbridge Disposal:
   a. Address: 9334 Sportsman Club Rd., P.O. Box 10699, Bainbridge Island, WA 98110.
   b. Telephone and Fax:
      1) Local: 206/842-4882.
      2) Toll-free: 800/531-1918.
      3) Fax: 206/780-9730.
2. Puget Sound Energy:
   a. Address: 10885 NE 4th Street, P.O. Box 97034, Bellevue, WA 98009-9734.
   b. Telephone: 888/225-5773.
3. City of Bainbridge Island (Water Service):
   a. Contact Person: Water Billing, Christy.
   b. Address: 280 Madison Ave., N., Bainbridge Island, WA 98110.
   c. Telephone and Fax:
      1) Phone: 206/780-8603.
      2) Fax: 206/842-5741.
4. Suburban Propane:
   a. Address: 3515 Chico Way, Bremerton, WA 98312.
   b. Telephone and Fax:
      1) Local: 360/377-7647.
      2) Toll-free: 800/439-7647.
      3) Fax: 360/373-6756.
5. Qwest (Telephone): 800/603-6000

6. Call Before You Dig (Utility Locate Service):
   a. Telephone: 800/424-5555 (same for all utilities).

1.05 PROJECT MILESTONES

A. General: Include the Milestones specified herein as a part of the Progress Schedule required under Section 01310, Progress Schedules.

B. Project Milestones: Generally described in the Agreement Form. Following is a detailed description of each:

| Project Milestone | Milestone Completion (Working Days After Notice To Proceed) |
|---|---|
| Submit Site Management Plan and other contract submittals | 30 |
| Submit detailed Progress Schedule, including PICS | 45 |
| PICS meeting | 75 |
| Complete all work under Contract | 365 |

1.06 WORK SEQUENCING/CONSTRAINTS

A. Include the following work sequences in the Progress Schedule:

1. Owner-furnished equipment will be in use at the site. Owner will decommission equipment at Contractor's request. Contractor will have 60 days from receiving equipment to facility startup.
2. The existing product tank (40T1400) shall be relocated to the new tank farm and connected to the new treatment plant within 1 week after the 10-day facility performance test (showing continuous operation). The Contractor shall modify the product tank for cover installation prior to relocation. Modifications for the cover shall be completed within 5 working days. The product tank shall be the last piece of Owner-furnished equipment that is relocated and installed into the new treatment plant.
3. Disconnect and relocate the automatic composite sampler (50M1335) within the 10 days before facility startup. All mechanical, I&C, and electrical connections shall be completed before facility startup.
4. The existing polymer skid system (50T1600, 50P1611, 50M1601, 40T1620, 50P1640) shall be disassembled and reassembled within the

10 days before facility startup. All mechanical, I&C, and electrical connections shall be completed before facility startup.

5. The existing digester tank (40T1420), digester/skim pump (50P1120) filter press (50M1470), filter press/digester feed pump (50P1460), and filter press feed tanks (40T1431-2) shall be disconnected from the existing plant and relocated to the new tank farm within the 90 days before facility startup. All mechanical, I&C, and electrical connections shall be completed before facility startup.
6. Coordinate all shutdowns of the existing treatment plant with plant operations and Owner or Owner's Representative. The shutdown duration shall be no longer than 7 days. If contracted work requires a longer shutdown period, the Contractor may request approval from the Owner. If Contractor's request is denied, the Contractor shall provide all temporary equipment, accessories, piping, power, and appurtenances to keep the existing treatment plant in service.
7. Site Barge Access:
   a. The Contractor may use barges to transport equipment to the site.
   b. Temporary road construction through the site area to the Contractor's proposed docking area and the required barge loading and unloading staging shall be coordinated with plant operations, Owner, and Engineer.
   c. The Contractor shall be held responsible for all barge transport and loading and unloading activities. The Contractor shall be financially responsible for the repair or replacement of the existing perimeter sheet pile wall, and existing treatment plant and environmental damage caused by barge activities.

## 1.07 FACILITY OPERATIONS

A. Continuous operation of Owner's facilities is of critical importance. Schedule and conduct activities to enable existing facilities to operate continuously, unless otherwise specified.

B. Perform Work continuously during critical connections and changeovers, and as required to prevent interruption of Owner's operations.

C. When necessary, plan, design, and provide various temporary services, utilities, connections, temporary piping and heating, access, and similar items to maintain continuous operations of Owner's facility.

D. Do not close lines, open or close valves, or take other action which would affect the operation of existing systems, except as specifically required by the Contract Documents and after authorization by Owner and Engineer. Such

authorization will be considered within 48 hours after receipt of Contractor's written request.

1.08 CONSTRUCTION PHOTOGRAPHS

A. Photographically document all phases of the Project including preconstruction, construction progress, and post-construction.

B. Construction Progress Photos:

1. Photographically demonstrate progress of construction, showing every aspect of Site and adjacent properties as well as interior and exterior of new or impacted structures.
2. Weekly: Take 24 exposures using Digital.

C. Digital Images:

1. Archive using a commercially available photo management system.
2. Label each disk with Project and Owner's name, and week and year images were produced.

1.09 REFERENCE POINTS AND SURVEYS

A. Location and elevation of bench marks are shown on Drawings.

B. Contractor's Responsibilities:

1. Provide additional survey and layout required to layout the Work.
2. Check and establish exact location of existing facilities prior to construction of new facilities and any connections thereto.
3. Provide competent employee(s), tools, stakes, and other equipment and materials as Engineer may require Contractor to:
   a. Establish control points, lines, and easement boundaries.
   b. Check layout, survey, and measurement Work performed by others.
   c. Measure quantities for payment purposes.

**PART 2 PRODUCTS (NOT USED)**

**PART 3 EXECUTION (NOT USED)**

**END OF SECTION**

# SECTION 01063
# HEALTH AND SAFETY

## PART 1 GENERAL

### 1.01 SUMMARY

A. This Section specifies procedures for complying with applicable laws and regulations related to worker safety and health. It is not the intent of the Owner, or Engineer to develop, manage, direct, and/or administer safety and health for Contractor's employees. It is required that all Contractors adhere to applicable Federal, state, and local safety and health standards.

B. Implement the Accident Prevention Program (APP) required by WAC 296-800-140 submitted per Section 00440 and accepted at the conclusion of the bid evaluation.

C. Submit a Site Specific Health and Safety Plan (HASP) for review prior to the start of each Work Order.

D. It is not the intent of the Owner to list and identify all applicable safety codes, standards, and/or regulations requiring compliance by all Contractor and subcontractor groups. Contractor and subcontractors shall be solely responsible for identifying and determining all safety codes, standards, and regulations that are applicable to the work.

E. Contractor and subcontractors are encouraged to use the consulting services of the State of Washington's Department of Labor and Industries WISHA Consulting Section. The Seattle Field Office is located at:

315 5th Ave. South, Suite 200
Seattle, WA 98104-2607
206/515-2800
http://www.lni.wa.gov/wisha/

Call or write for assistance with the requirements of this Section.

F. All work required in the Contract shall meet the requirements in RCW 49.17 and WAC 296.

G. The equipment decontamination pad and personnel decontamination facilities controlled by current plant Operator are available for use by Contractor. Contractor shall coordinate the use of decontamination equipment pad and personnel facilities with plant Operator. Contractor shall clean all existing

decontamination pad and facilities at least once per week. Cleaning shall include as a minimum toilet bowls, scrubbing shower stalls, and sweeping and mopping floors.

1.02 QUALITY ASSURANCE

A. Referenced Standards: This Section incorporates by reference the latest revision of the following document. It is a part of this Section as specified and modified. In case of conflict between the requirements of this Section and that of the listed document, the requirements of this Section shall prevail.

| **Reference** | **Title** |
|---|---|
| 29 USC 651 et seq. | Federal Occupational Safety and Health Act |
| 29 CFR 1910.146 | Permit Required Confined Spaces |
| 29 CFR 1910.147 | Control of Hazardous Energy (lockout/tagout) |
| 29 CFR 1926 | Safety and Health Regulations for Construction |
| Chapter 296-24 WAC | WISHA General Safety and Health Standards |
| Chapter 296-45 WAC | WISHA Electrical Workers Safety Rules |
| Chapter 296-62 WAC | WISHA General Occupational Health Standards |
| Chapter 296-67 WAC | WISHA Process Safety Management Standards |
| Chapter 296-155 WAC | WISHA Safety Standards for Construction |
| Chapter 296-65 WAC | Asbestos Removal & Encapsulation |
| Chapter 296-800 WAC | Safety and Health Core Rules |
| Chapter 296-809 WAC | Confined Space Entry |
| Chapter 296-823 WAC | Bloodborne Pathogens |
| Chapter 296-824 WAC | Emergency Response |
| Chapter 296-841 WAC | Respiratory Hazards |
| Chapter 296-842 WAC | Respirators |
| Chapter 296-843 WAC | Hazardous Waste Operations |
| RCW 49.17 | Washington Industrial Safety and Health Act (WISHA) |
| WAC 296-800-110 | Employer Responsibilities: Safe Workplace-Summary |

1.03 SUBMITTALS

A. Procedures: Section 01300, Submittals.

B. Company Accident Prevention Plan (APP):

1. Provide one copy with Submittal. The APP shall be reviewed and accepted, with comments if necessary, prior to Contract Award.
2. Submit two copies, revised if necessary, within 5 days of the NTP.

C. Site Specific Health and Safety Plan (HASP):

1. Submit one copy of a HASP, specific to each Work Order under the Contract, previous to starting work.
2. After acceptance, submit two copies, revised if necessary.

D. Revised APP and HASP accommodating changes requested by Engineer, Owner, and/or regulatory agencies or jurisdiction per Article Site Specific Health and Safety Plan Revisions. Provide four copies.

E. Incident Report(s): Provide three copies.

F. Minutes and List of Attendees of the Pre-job Safety Meeting: Provide three copies within 3 days of the meeting.

G. Minutes and List of Attendees of Weekly Safety Tailgate Meeting: Provide three copies within 3 days of the meeting.

H. Monthly Contractor Injury Summary Report: Provide three copies each month on Form 01063-A within 10 days of the end of each month.

I. Notice and listing of flammable liquids and liquefied petroleum gases when planned to be used on the worksite.

1.04 CONTRACTOR QUALITY ASSURANCE

A. Review the entire scope of work, the work site location, adjacent structures and systems, and applicable Contract requirements to ensure the safety considerations and requirements that shall be addressed and planned for in a HASP, prior to the start of work.

B. Ensure that Contractor's employees and the subcontractor's employees comply with the APP and HASP.

C. Designate a health and safety supervisor onsite with appropriate training, responsibility and full authority to coordinate, implement, and enforce the Contractor's APP and HASP for the duration of this Contract. The name and telephone number of the health and safety supervisor and alternate shall appear in the APP and HASP.

D. Ensure that safety work principles and practices are followed in completing work tasks.

## 1.05 PROJECT SPECIFIC/SITE SPECIFIC HEALTH AND SAFETY PLAN (HASP)

A. A comprehensive HASP covers all aspects of the Contract scope of work activities related specifically and distinctly to the Scope of Work and site conditions. The HASP shall be based on a site specific hazard analysis and shall explain how the APP elements and any Contract specific safety procedures shall be applied to the identified hazards in the work. The HASP shall meet the requirements of the General Clause, FAR 52.236-13, Alternate I.

B. HASP Organization: Organized and bound to readily accept revisions and additions:

1. Outline form.
2. Table of contents.
3. Numbered pages.

C. The following describe certain, but not all, safety standards common to construction. These standards may be described in the company APP. The HASP will note all hazards that may apply to the site and scope of work and will describe how such standards will be employed to protect worker safety. Items below which are not applicable, need not appear in the HASP.

1. Hazard Communication (WAC 296-800-170):
   a. Contaminant gases that may be encountered include, but are not limited to, hydrogen sulfide, methane, carbon monoxide and carbon dioxide.
   b. Provide a written Hazard Communication Program and emergency management plan addressing these and other potential hazardous substances that may exist and/or be brought onsite during the work.
   c. For work requiring the use of hazardous materials and chemicals, provide a list and corresponding Material Safety Data Sheets (MSDS) for hazardous chemicals to be used onsite. If no hazardous chemicals are to be used, provide statement to that effect.
2. Confined Space (WAC 296-809):
   a. The nature of the work may expose workers to permit-required confined spaces having possible explosive, toxic and oxygen deficient atmospheric conditions.
   b. Prior to execution of work in confined spaces. Provide a written Permit Required Confined Space Safety Program that meets the requirements of 29 CFR 1910.146 and WAC 296-62 Part M.

c. Confined spaces designated throughout the existing water treatment plant are considered Permit Required Spaces.

3. Hazardous Energy Control:
   a. Lockout/Tagout (WAC 296-24 Part A-4):
      1) The nature of the work may expose workers to hazardous energy sources that include, but are not limited to, electrical, mechanical, pneumatic, hydraulic, thermal, and computerized systems.
      2) Provide a written plan outlining safe work practices addressing hazardous energy control procedures that meet the requirements of 29 CFR 1910.147 and WAC 296-24 Part A-4.
4. Fall Prevention and Protection (WAC 296-24 Part J-1 and WAC 296-155 Part C-1):
   a. The nature of the work may expose workers to fall hazards.
   b. Provide a written Fall Prevention and Protection plan outlining safe work practices addressing fall hazards that meet the requirements of WAC 296-24 Part J-1 and WAC 296-155 Part C-1.
5. Personal Protective Equipment (WAC 296-800-160):
   a. The nature of the work may expose workers to miscellaneous injury hazards to the head, hands, feet, body, eyes, ears, etc.
   b. Provide a written Personal Protective Equipment (PPE) plan outlining safe work practices addressing the use of personal protective equipment and clothing that meet the requirements of WAC 296-24 Part A-2.
6. Flammable Liquids and Liquefied Petroleum Gases (LPG):
   a. No propane, propylene, butane, isobutane, and butylenes shall be stored inside buildings.
   b. Provide a written listing of each of the materials listed in Article Utilities planned to be used onsite.
   c. When materials listed in Article Utilities are to be used on the work site, submit listing of the materials and notice prior to arrival on the work site.
7. Respiratory Protection (WAC 296-841 Respiratory Hazards and 842 Respirators):
   a. The required use of respiratory protection is anticipated to perform the work.
   b. Provide a written respiratory protection program meeting the requirements of WAC 296-62 Part E.
   c. This requirement may be satisfied by incorporating the required elements of the program into the project specific HASP.

8. Hazardous Waste (WAC 296-843, Hazardous Waste Operations): The Wyckoff Site is an active hazardous waste superfund site and Contractor must submit a comprehensive written safety and health program in accordance with WAC 296-62-3010 to work on the site. The Contractor's plan must conform to the Operator's plan which governs the site, but the Contractor is solely responsible for compliance with WAC 296-62-3010 and the safety and health of its employees. The operator's HASP will be provided to the Contractor after Award of the Contract. The Operator maintains exclusion zones on the site where all personnel must have 40-hour HAZWOPER training. Operator's plan also requires all intrusive activities, for example drilling and excavation, be conducted in an exclusion zone. If Contractor personnel must visit the existing treatment plant, they must be escorted by trained personnel. The Owner and Operator have the right to extend the exclusion zone to any area of the site, including Contractor's work area, if Owner or Operator determine that conditions for expanding the exclusion zone exist. Contractor may, at their discretion, establish work areas at the site where it determines that compliance with HAZWOPER regulations allow workers with other than the full 40- or 80-hour HAZWOPER training. Special attention should be paid to:
   a. Work hazard evaluation.
   b. Field activities and tasks covered by the site safety plan.
   c. Protective and monitoring equipment requirements:
      1) Personal protective equipment.
      2) Monitoring equipment.
   d. Site organization and control of workers and access by visitors.
   e. Decontamination.
   f. Medical Surveillance Program.
   g. Personnel and responsibilities.
   h. Emergencies.
   i. Training and onsite briefing topics.
   j. Acknowledgement and acceptance of site safety plan by all those who will work under the plan.
   k. Personnel Qualification: Participants on a cleanup site must have received, at a minimum, 40 hours of hazardous waste operations training. Personnel who must wear Level A or B, PPE must have 80 hours of hazardous waste operations training. All other people admitted to the site who are unlikely to be exposed to over the permissible exposure levels and published exposure limits must have, at a minimum, 24 hours of hazardous waste operations training. Proof of training is required prior to doing cleanup work on this Project.

1.06 UTILITIES

A. Call the Utilities Underground Location Center (UULC) and Operator before you dig.

B. During the performance of the work, take appropriate precautions when working near, around, and/or with utilities, in order to protect the health and safety of the worker, the public, property, and the environment.

C. Provide a flagged warning line for all work conducted in proximity to power lines. Coordinate with utility owner for this work.

D. Coordinate with the utility owner and Engineer to obtain approval to disconnect or reconnect utilities.

**PART 2 PRODUCTS (NOT USED)**

**PART 3 EXECUTION**

3.01 SAFETY AND HEALTH COMPLIANCE

A. The Owner or Owner's Representative reserves the right to observe the Contractor's APP and implementation of HASP. The Owner or Owner's Representative reserves the right to stop that portion of the Contractor's work that is determined to be an imminent or immediate threat to Owner, Engineer, or Operator worker health or safety. Ongoing work and hazardous situations that are considered a safety or health risk by the Owner or Owner's Representative shall be corrected immediately.

B. Ensure that necessary air monitoring, ventilation equipment, protective clothing, hazardous energy control devices, fall prevention and other specified supplies and equipment are made readily available to employees to facilitate implementation of the APP and the HASP.

C. Ensure all equipment and personnel entering and exclusion zone are decontaminated in accordance with the Operator's safety plan. All decontamination equipment and facilities made available by the Operator must be maintained by Contractor. Contractor is responsible to repair or replace any damaged equipment. Contractor is responsible to maintain the personal decontamination facilities used by their employees in a sanitary and safe condition.

D. Notify the Owner or Owner's Representative immediately of all incidents involving personal injury and/or property damage. Provide a written report

known as the Incident Report within 24 hours of any incident. Report for each incident occurrence shall include:

1. Description of event.
2. Names of personnel involved.
3. Description of injuries and treatment required (short term and long term).
4. Description of property damage.
5. Site visits and inspections of other agencies as a result of an incident. Include names of the persons, purpose of the visit, and any other pertinent information.

E. Conduct a pre-job safety meeting with Contractor staff and with all subcontractor staff. Submit list of attendees and minutes of pre-job safety meeting.

F. Conduct all weekly safety tailgate meetings. Submit list of attendees and minutes of weekly safety tailgate meetings.

G. Submit a Monthly Contractor Injury Report summarizing the current month's injury accidents.

H. Use of intoxicants or of illegal or debilitating drugs while working on an Owner contract is prohibited.

I. Failure to comply with safety and health regulations will result in work suspension until adequate safety and health measures are implemented.

3.02 SITE SPECIFIC HEALTH AND SAFETY PLAN REVISIONS

A. In the event that the Owner, regulatory agencies, or jurisdictions determine that the HASP or associated documents, or organizational structure to be inadequate to protect employees and the public:

1. Modify the APP and HASP to meet the requirements of said regulatory agencies, jurisdictions, and/or the Owner or Owner's Representative.
2. Provide submittal for revisions to the APP and HASP within 7 days of the notice of requirement for modification.
3. The revision shall be reviewed and accepted by the Owner or Owner's Representative prior to changing work practices.

3.03 POSTING

A. Provide and maintain a copy of the accepted APP and the HASP at the Contractor's jobsite office and at each of the subcontractors' offices.

3.04 COMPLIANCE

A. Failure to comply with this Section will result in work suspension until adequate safety and health measures are implemented.

**END OF SECTION**

# SECTION 01092
# ABBREVIATIONS

## PART 1 GENERAL

### 1.01 REFERENCE TO STANDARDS AND SPECIFICATIONS OF TECHNICAL SOCIETIES

A. Reference to standards and specifications of technical societies and reporting and resolving discrepancies associated therewith is provided herein and in the individual Specification sections.

B. The provisions of the Contract Documents shall take precedence in resolving any conflict, error, ambiguity, or discrepancy between the provisions of the Contract Documents and the provisions of any standard or specification.

C. Work specified by reference to published standard or specification of government agency, technical association, trade association, professional society or institute, testing agency, or other organization shall meet requirements or surpass minimum standards of quality for materials and workmanship established by designated standard or specification.

D. Where so specified, products or workmanship shall also meet or exceed additional prescriptive or performance requirements included within Contract Documents to establish a higher or more stringent standard of quality than required by referenced standard.

E. Where two or more standards are specified to establish quality, product and workmanship shall meet or exceed requirements of most stringent.

F. Where both a standard and a brand name are specified for a product in Contract Documents, proprietary product named shall meet or exceed requirements of specified reference standard.

G. Copies of standards and specifications of technical societies:

1. Copies of applicable referenced standards have not been bound in these Contract Documents.
2. Where copies of standards are needed by Contractor, obtain a copy or copies directly from publication source and maintain in an orderly manner at the Site as Work Site records, available to Contractor's personnel, Subcontractors, Owner, and Engineer.

## 1.02 ABBREVIATIONS

A. Abbreviations for trade organizations and government agencies: Following is a list of construction industry organizations and government agencies to which references may be made in the Contract Documents, with abbreviations used.

| | | |
|---|---|---|
| 1. | AA | Aluminum Association |
| 2. | AABC | Associated Air Balance Council |
| 3. | AAMA | American Architectural Manufacturers Association |
| 4. | AASHTO | American Association of State Highway and Transportation Officials |
| 5. | ABMA | American Bearing Manufacturers' Association |
| 6. | ACI | American Concrete Institute |
| 7. | AEIC | Association of Edison Illuminating Companies |
| 8. | AGA | American Gas Association |
| 9. | AGMA | American Gear Manufacturers' Association |
| 10. | AI | Asphalt Institute |
| 11. | AISC | American Institute of Steel Construction |
| 12. | AISI | American Iron and Steel Institute |
| 13. | AITC | American Institute of Timber Construction |
| 14. | ALS | American Lumber Standards |
| 15. | AMCA | Air Movement and Control Association |
| 16. | ANSI | American National Standards Institute |
| 17. | APA | APA – The Engineered Wood Association |
| 18. | API | American Petroleum Institute |
| 19. | APWA | American Public Works Association |
| 20. | ARI | Air-Conditioning and Refrigeration Institute |
| 21. | ASAE | American Society of Agricultural Engineers |
| 22. | ASCE | American Society of Civil Engineers |
| 23. | ASHRAE | American Society of Heating, Refrigerating and Air-Conditioning Engineers, Inc. |
| 24. | ASME | American Society of Mechanical Engineers |
| 25. | ASNT | American Society for Nondestructive Testing |
| 26. | ASTM | ASTM International |
| 27. | AWI | Architectural Woodwork Institute |
| 28. | AWPA | American Wood Preservers' Association |
| 29. | AWPI | American Wood Preservers' Institute |
| 30. | AWS | American Welding Society |
| 31. | AWWA | American Water Works Association |
| 32. | BHMA | Builders Hardware Manufacturers' Association |
| 33. | CBM | Certified Ballast Manufacturer |
| 34. | CDA | Copper Development Association |
| 35. | CGA | Compressed Gas Association |

| | | |
|---|---|---|
| 36. | CISPI | Cast Iron Soil Pipe Institute |
| 37. | CMAA | Crane Manufacturers' Association of America |
| 38. | CRSI | Concrete Reinforcing Steel Institute |
| 39. | CS | Commercial Standard |
| 40. | CSA | Canadian Standards Association |
| 41. | CSI | Construction Specifications Institute |
| 42. | DIN | Deutsches Institut für Normung e.V. |
| 43. | DIPRA | Ductile Iron Pipe Research Association |
| 44. | EIA | Electronic Industries Alliance |
| 45. | EJCDC | Engineers Joint Contract Documents' Committee |
| 46. | ETL | Electrical Test Laboratories |
| 47. | FAA | Federal Aviation Administration |
| 48. | FCC | Federal Communications Commission |
| 49. | FDA | Food and Drug Administration |
| 50. | FEMA | Federal Emergency Management Agency |
| 51. | FIPS | Federal Information Processing Standards |
| 52. | FM | Factory Mutual |
| 53. | Fed. Spec. | Federal Specifications (FAA Specifications) |
| 54. | FS | Federal Specifications and Standards (Technical Specifications) |
| 55. | GA | Gypsum Association |
| 56. | GANA | Glass Association of North America |
| 57. | HI | Hydraulic Institute |
| 58. | HMI | Hoist Manufacturers' Institute |
| 59. | IBC | International Building Code |
| 60. | ICBO | International Conference of Building Officials |
| 61. | ICC | International Code Council |
| 62. | ICEA | Insulated Cable Engineers' Association |
| 63. | IFC | International Fire Code |
| 64. | IEEE | Institute of Electrical and Electronics Engineers, Inc. |
| 65. | IESNA | Illuminating Engineering Society of North America |
| 66. | IFI | Industrial Fasteners Institute |
| 67. | IGMA | Insulating Glass Manufacturer's Alliance |
| 68. | IMC | International Mechanical Code |
| 69. | INDA | Association of the Nonwoven Fabrics Industry |
| 70. | IPC | International Plumbing Code |
| 71. | ISA | Instrumentation, Systems, and Automation Society |
| 72. | ISO | International Organization for Standardization |
| 73. | ITL | Independent Testing Laboratory |

| | | |
|---|---|---|
| 74. | JIC | Joint Industry Conferences of Hydraulic Manufacturers |
| 75. | MIA | Marble Institute of America |
| 76. | MIL | Military Specifications |
| 77. | MMA | Monorail Manufacturers' Association |
| 78. | NAAMM | National Association of Architectural Metal Manufacturers |
| 79. | NACE | NACE International |
| 80. | NEBB | National Environmental Balancing Bureau |
| 81. | NEC | National Electrical Code |
| 82. | NECA | National Electrical Contractor's Association |
| 83. | NEMA | National Electrical Manufacturers' Association |
| 84. | NESC | National Electrical Safety Code |
| 85. | NETA | InterNational Electrical Testing Association |
| 86. | NFPA | National Fire Protection Association |
| 87. | NHLA | National Hardwood Lumber Association |
| 88. | NICET | National Institute for Certification in Engineering Technologies |
| 89. | NIST | National Institute of Standards and Technology |
| 90. | NRCA | National Roofing Contractors Association |
| 91. | NRTL | Nationally Recognized Testing Laboratories |
| 92. | NSF | NSF International |
| 93. | NSPE | National Society of Professional Engineers |
| 94. | NTMA | National Terrazzo and Mosaic Association |
| 95. | NWWDA | National Wood Window and Door Association |
| 96. | OSHA | Occupational Safety and Health Act (both Federal and State) |
| 97. | PCI | Precast/Prestressed Concrete Institute |
| 98. | PEI | Porcelain Enamel Institute |
| 99. | PPI | Plastic Pipe Institute |
| 100. | PS | Product Standards Section-U.S. Department of Commerce |
| 101. | RMA | Rubber Manufacturers' Association |
| 102. | RUS | Rural Utilities Service |
| 103. | SAE | Society of Automotive Engineers |
| 104. | SDI | Steel Deck Institute |
| 105. | SDI | Steel Door Institute |
| 106. | SJI | Steel Joist Institute |
| 107. | SMACNA | Sheet Metal and Air Conditioning Contractors National Association |
| 108. | SPI | Society of the Plastics Industry |
| 109. | SSPC | The Society for Protective Coatings |
| 110. | SWI | Steel Window Institute |

| | | |
|---|---|---|
| 111. | TEMA | Tubular Exchanger Manufacturers' Association |
| 112. | TCA | Tile Council of North America |
| 113. | TIA | Telecommunications Industry Association |
| 114. | UBC | Uniform Building Code |
| 115. | UFC | Uniform Fire Code |
| 116. | UL | Underwriters Laboratories Inc. |
| 117. | UMC | Uniform Mechanical Code |
| 118. | UPC | Uniform Plumbing Code. |
| 119. | USBR | U.S. Bureau of Reclamation |
| 120. | WCLIB | West Coast Lumber Inspection Bureau |
| 121. | WWPA | Western Wood Products Association |

**PART 2 PRODUCTS (NOT USED)**

**PART 3 EXECUTION (NOT USED)**

**END OF SECTION**

# SECTION 01200
# PROJECT MEETINGS

## PART 1 GENERAL

### 1.01 GENERAL

A. Contractor shall schedule physical arrangements for meetings throughout progress of the Work, prepare meeting agenda with regular participant input and distribute with written notice of each meeting, and preside at meetings. The Owner or Owner's Representative shall record minutes to include significant proceedings and decisions, and reproduce and distribute copies of minutes within 5 days after each meeting to participants and parties affected by meeting decisions.

### 1.02 PRECONSTRUCTION CONFERENCE

A. Contractor shall be prepared to discuss the following subjects, as a minimum:

1. Required schedules.
2. Status of Bonds and insurance.
3. Sequencing of critical path work items.
4. Progress payment procedures.
5. Project changes and clarification procedures.
6. Use of Site, access, office and storage areas, security and temporary facilities.
7. Major product delivery and priorities.
8. Contractor's safety plan and representative.

B. Attendees will include:

1. Owner's representatives.
2. Contractor's office representative.
3. Contractor's resident superintendent.
4. Contractor's quality control representative.
5. Subcontractors' representatives whom Contractor may desire or Engineer may request to attend.
6. Engineer's representatives.
7. Others as appropriate.

### 1.03 PRELIMINARY SCHEDULES REVIEW MEETING

A. As set forth in Section 01310, Progress Schedules.

## 1.04 PROGRESS MEETINGS

A. Engineer will schedule regular progress meetings at Site, conducted weekly to review the Work progress, Progress Schedule, Schedule of Submittals, Application for Payment, contract modifications, I&C software and testing progress, and other matters needing discussion and resolution.

B. Attendees will include:

1. Owner's representative(s), as appropriate.
2. Contractor, Subcontractors, and Suppliers, as appropriate.
3. Engineer's representative(s).
4. Others as appropriate.

## 1.05 QUALITY CONTROL AND COORDINATION MEETINGS

A. Scheduled by Engineer on regular basis and as necessary to review test and inspection reports, and other matters relating to quality control of the Work and work of other contractors.

B. Attendees will include:

1. Contractor.
2. Contractor's designated quality control representative.
3. Subcontractors and Suppliers, as necessary.
4. Engineer's representatives.

## 1.06 PREINSTALLATION MEETINGS

A. When required in individual Specification sections, convene at Site prior to commencing the Work of that section.

B. Require attendance of entities directly affecting, or affected by, the Work of that section.

C. Notify Engineer 4 days in advance of meeting date.

D. Provide suggested agenda to Engineer to include reviewing conditions of installation, preparation and installation or application procedures, and coordination with related Work and work of others.

## 1.07 FACILITY STARTUP MEETINGS

A. Schedule and attend a minimum of two facility startup meetings. The first of such meetings shall be held prior to submitting Facility Startup Plan, as

specified in Section 01810, Equipment Testing and Facility Startup, and shall include preliminary discussions regarding such plan.

B. Agenda items shall include, but not be limited to, content of Facility Startup Plan, coordination needed between various parties in attendance, and potential problems associated with startup.

C. Attendees will include:

1. Contractor.
2. Contractor's designated quality control representative.
3. Subcontractors and equipment manufacturer's representatives whom Contractor deems to be directly involved in facility startup.
4. Engineer's representatives.
5. Owner's operations personnel.
6. Others as required by Contract Documents or as deemed necessary by Contractor.

1.08 PROCESS INSTRUMENTATION AND CONTROL SYSTEMS COORDINATION MEETINGS

A. Engineer will schedule on a regular basis and as necessary to review PICS and testing progress and overall Progress Schedule. Specific dates shall be noted on the Progress Schedule.

B. The following meetings shall be scheduled on the Progress Schedule as a minimum:

1. Pre-installation meeting.
2. Coordination meetings during installation activities.
3. Pre-testing coordination meeting.
4. Coordination meetings during testing activities.
5. Coordination meeting during startup activities.

C. Attendees will include:

1. Owner or Owner's Representative(s), as appropriate.
2. Contractor.
3. Engineer or Engineer's representative.
4. Others as appropriate.

1.09 OTHER MEETINGS

A. In accordance with Contract Documents and as may be required by Owner and Engineer.

**PART 2 PRODUCTS (NOT USED)**

**PART 3 EXECUTION (NOT USED)**

**END OF SECTION**

# SECTION 01300
# SUBMITTALS

## PART 1 GENERAL

### 1.01 DEFINITIONS

A. Action Submittal: Written and graphic information submitted by Contractor that requires Engineer's approval.

B. Informational Submittal: Information submitted by Contractor that does not require Engineer's approval.

### 1.02 PROCEDURES

A. Direct submittals to U.S. Environmental Protection Agency at the following address, unless specified otherwise.

1. CH2M HILL
   Attn: Nancy Winslow
   2300 N.W. Walnut Blvd.
   Corvallis, OR 97330

B. Transmittal of Submittal:

1. Contractor shall:
   a. Review each submittal and check for compliance with Contract Documents.
   b. Stamp each submittal with uniform approval stamp before submitting to Engineer.
      1) Stamp to include Project name, submittal number, Specification number, Contractor's reviewer name, date of Contractor's approval, and statement certifying that submittal has been reviewed, checked, and approved for compliance with Contract Documents.
      2) Engineer will not review submittals that do not bear Contractor's approval stamp and will return them without action.
2. Complete, sign, and transmit with each submittal package, one Transmittal of Contractor's Submittal form attached at end of this section.
3. Identify each submittal with the following:
   a. Numbering and Tracking System:
      1) Sequentially number each submittal.

2) Resubmission of submittal shall have original number with sequential alphabetic suffix.

b. Specification section and paragraph to which submittal applies.
c. Project title and Engineer's project number.
d. Date of transmittal.
e. Names of Contractor, Subcontractor or Supplier, and manufacturer as appropriate.

4. Identify and describe each deviation or variation from Contract Documents.

C. Format:

1. Do not base Shop Drawings on reproductions of Contract Documents.
2. Package submittal information by individual Specification section. Do not combine different Specification sections together in submittal package, unless otherwise directed in Specification.
3. Present in a clear and thorough manner and in sufficient detail to show kind, size, arrangement, and function of components, materials, and devices, and compliance with Contract Documents.
4. Index with labeled tab dividers in orderly manner.

D. Timeliness: Schedule and submit in accordance Schedule of Submittals, and requirements of individual Specification sections.

E. Processing Time:

1. Time for review shall commence on Engineer's receipt of submittal.
2. Engineer will act upon Contractor's submittal and transmit response to Contractor not later than 30 days after receipt, unless otherwise specified.
3. Resubmittals will be subject to same review time.
4. No adjustment of Contract Times or Price will be allowed due to delays in progress of Work caused by rejection and subsequent resubmittals.

F. Resubmittals: Clearly identify each correction or change made.

G. Incomplete Submittals:

1. Engineer will return entire submittal for Contractor's revision if preliminary review deems it incomplete.
2. When any of the following are missing, submittal will be deemed incomplete:
   a. Contractor's review stamp, completed and signed.
   b. Transmittal of Contractor's Submittal, completed and signed.
   c. Insufficient number of copies.

H. Submittals not required by Contract Documents:

1. Will not be reviewed and will be returned stamped "Not Subject to Review."
2. Engineer will keep one copy and return all remaining copies to Contractor.

1.03 ACTION SUBMITTALS

A. Prepare and submit Action Submittals required by individual Specification sections.

B. Shop Drawings:

1. Copies: Four.
2. Identify and Indicate:
   a. Applicable Contract Drawing and Detail number, products, units and assemblies, and system or equipment identification or tag numbers.
   b. Equipment and Component Title: Identical to title shown on Drawings.
   c. Critical field dimensions and relationships to other critical features of Work. Note dimensions established by field measurement.
   d. Project-specific information drawn accurately to scale.
3. Manufacturer's standard schematic drawings and diagrams as follows:
   a. Modify to delete information that is not applicable to the Work.
   b. Supplement standard information to provide information specifically applicable to the Work.
4. Product Data: Provide as specified in individual Specifications.
5. Foreign Manufacturers: When proposed, include following additional information:
   a. Names and addresses of at least two companies that maintain technical service representatives close to Project.
   b. Complete list of spare parts and accessories for each piece of equipment.

C. Samples:

1. Copies: Two, unless otherwise specified in individual Specifications.
2. Preparation: Mount, display, or package Samples in manner specified to facilitate review of quality. Attach label on unexposed side that includes the following:
   a. Manufacturer name.
   b. Model number.

c. Material.
d. Sample source.

3. Manufacturer's Color Chart: Units or sections of units showing full range of colors, textures, and patterns available.
4. Full-size Samples:
   a. Size as indicated in individual Specification section.
   b. Prepared from same materials to be used for the Work.
   c. Cured and finished in manner specified.
   d. Physically identical with product proposed for use.

D. Action Submittal Dispositions: Engineer will review, mark, and stamp as appropriate, and distribute marked-up copies as noted:

1. Approved:
   a. Contractor may incorporate product(s) or implement Work covered by submittal.
   b. Distribution:
      1) One copy furnished Owner.
      2) One copy furnished Resident Project Representative.
      3) One copy retained in Engineer's file.
      4) Remaining copies returned to Contractor appropriately annotated.
2. Approved as Noted:
   a. Contractor may incorporate product(s) or implement Work covered by submittal, in accordance with Engineer's notations.
   b. Distribution:
      1) One copy furnished Owner.
      2) One copy furnished Resident Project Representative.
      3) One copy retained in Engineer's file.
      4) Remaining copies returned to Contractor appropriately annotated.
3. Partial Approval, Resubmit as Noted:
   a. Make corrections or obtain missing portions, and resubmit.
   b. Except for portions indicated, Contractor may begin to incorporate product(s) or implement Work covered by submittal, in accordance with Engineer's notations.
   c. Distribution:
      1) One copy furnished Owner.
      2) One copy furnished Resident Project Representative.
      3) One copy retained in Engineer's file.
      4) Remaining copies returned to Contractor appropriately annotated.

4. Revise and Resubmit:
   a. Contractor may not incorporate product(s) or implement Work covered by submittal.
   b. Distribution:
      1) One copy furnished Resident Project Representative.
      2) One copy retained in Engineer's file.
      3) Remaining copies returned to Contractor appropriately annotated.

1.04 INFORMATIONAL SUBMITTALS

A. General:

1. Copies: Submit three copies, unless otherwise indicated in individual Specification section.
2. Refer to individual Specification sections for specific submittal requirements.
3. Engineer will review each submittal. If submittal meets conditions of the Contract, Engineer will forward copies to appropriate parties. If Engineer determines submittal does not meet conditions of the Contract and is therefore considered unacceptable, Engineer will retain one copy and return remaining copies with review comments to Contractor, and require that submittal be corrected and resubmitted.

B. Application for Payment: In accordance with Section 01025, Measurement and Payment.

C. Certificates:

1. General:
   a. Provide notarized statement that includes signature of entity responsible for preparing certification.
   b. Signed by officer or other individual authorized to sign documents on behalf of that entity.
2. Welding: In accordance with individual Specification sections.
3. Installer: Prepare written statements on manufacturer's letterhead certifying that installer complies with requirements as specified in individual Specification sections.
4. Material Test: Prepared by qualified testing agency, on testing agency's standard form, indicating and interpreting test results of material for compliance with requirements.
5. Certificates of Successful Testing or Inspection: Submit when testing or inspection is required by Laws and Regulations or governing agency or specified in individual Specification sections.

6. Manufacturer's Certificate of Compliance: In accordance with Section 01640, Manufacturers' Services.
7. Manufacturer's Certificate of Proper Installation: In accordance with Section 01640, Manufacturers' Services.

D. Contract Closeout Submittals: In accordance with Section 01780, Contract Closeout.

E. Contractor-Design Data:

1. Written and graphic information.
2. List of assumptions.
3. List of performance and design criteria.
4. Summary of loads or load diagram, if applicable.
5. Calculations.
6. List of applicable codes and regulations.
7. Name and version of software.
8. Information requested in individual Specification section.

F. Manufacturer's Instructions: Written or published information that documents manufacturer's recommendations, guidelines, and procedures in accordance with individual Specification sections.

G. Operation and Maintenance Data: As required in Section 01430, Operation and Maintenance Data.

H. Schedules:

1. Schedule of Submittals: Prepare separately or in combination with Progress Schedule as specified in Section 01310, Progress Schedules.
   a. Show for each, at a minimum, the following:
      1) Specification section number.
      2) Identification by numbering and tracking system as specified under Paragraph Transmittal of Submittal.
      3) Estimated date of submission to Engineer, including reviewing and processing time.
   b. On a monthly basis, submit updated schedule to Engineer if changes have occurred or resubmittals are required.
2. Schedule of Values: In accordance with Section 01025, Measurement and Payment.
3. Schedule of Estimated Progress Payments: In accordance with Section 01310, Progress Schedules.
4. Progress Schedules: In accordance with Section 01310, Progress Schedules.

I. Special Guarantee: Supplier's written guarantee as required in individual Specification sections.

J. Statement of Qualification: Evidence of qualification, certification, or registration as required in Contract Documents to verify qualifications of professional land surveyor, engineer, materials testing laboratory, specialty Subcontractor, trade, Specialist, consultant, installer, and other professionals.

K. Submittals Required by Laws, Regulations, and Governing Agencies:

1. Submit promptly notifications, reports, certifications, payrolls, and otherwise as may be required, directly to the applicable federal, state, or local governing agency or their representative.
2. Transmit to Engineer for Owner's records one copy of correspondence and transmittals (to include enclosures and attachments) between Contractor and governing agency.

L. Test and Inspection Reports:

1. General: Shall contain signature of person responsible for test or report.
2. Factory:
   a. Identification of product and Specification section, type of inspection or test with referenced standard or code.
   b. Date of test, Project title and number, and name and signature of authorized person.
   c. Test results.
   d. If test or inspection deems material or equipment not in compliance with Contract Documents, identify corrective action necessary to bring into compliance.
   e. Provide interpretation of test results, when requested by Engineer.
   f. Other items as identified in individual Specification sections.
3. Field: As a minimum, include the following:
   a. Project title and number.
   b. Date and time.
   c. Record of temperature and weather conditions.
   d. Identification of product and Specification section.
   e. Type and location of test, Sample, or inspection, including referenced standard or code.
   f. Date issued, testing laboratory name, address, and telephone number, and name and signature of laboratory inspector.
   g. If test or inspection deems material or equipment not in compliance with Contract Documents, identify corrective action necessary to bring into compliance.
   h. Provide interpretation of test results, when requested by Engineer.

i. Other items as identified in individual Specification sections.

M. Testing and Startup Data: In accordance with Section 01810, Equipment Testing and Facility Startup.

N. Training Data: In accordance with Section 01640, Manufacturers' Services.

1.05 SUPPLEMENT

A. The supplement listed below, following "End of Section," is part of this Specification.

1. Transmittal of Contractor's Submittal Form.

**PART 2 PRODUCTS (NOT USED)**

**PART 3 EXECUTION (NOT USED)**

**END OF SECTION**

CH2MHILL

# TRANSMITTAL OF CONTRACTOR'S SUBMITTAL

(ATTACH TO EACH SUBMITTAL)

DATE: _____

**TO:** _____

Submittal No.: _____

☐ New Submittal ☐ Resubmittal

Project: _____

Project No.: _____

Specification Section No.: _____
**(Cover only one section with each transmittal)**

Schedule Date of Submittal:

**FROM:** _____
Contractor

**SUBMITTAL TYPE:** ☐ Shop Drawing ☐ Sample ☐ Informational

**The following items are hereby submitted:**

| Number of Copies | Description of Item Submitted (Type, Size, Model Number, Etc.) | Spec. and Para. No. | Drawing or Brochure Number | Contains Variation to Contract | |
|---|---|---|---|---|---|
| | | | | No | Yes |
| | | | | | |
| | | | | | |
| | | | | | |
| | | | | | |
| | | | | | |
| | | | | | |
| | | | | | |
| | | | | | |
| | | | | | |

Contractor hereby certifies that (i) Contractor has complied with the requirements of Contract Documents in preparation, review, and submission of designated Submittal and (ii) the Submittal is complete and in accordance with the Contract Documents and requirements of laws and regulations and governing agencies.

By: _____
Contractor (Authorized Signature)

# SECTION 01310
# PROGRESS SCHEDULES

## PART 1 GENERAL

### 1.01 SUBMITTALS

A. Informational Submittals:

1. Preliminary Progress Schedule: Submit at least 7 days prior to preconstruction conference.
2. Detailed Progress Schedule:
   a. Submit initial Detailed Progress Schedule within 60 days after Effective Date of the Agreement.
   b. Submit an Updated Progress Schedule at each update, in accordance with Article Detailed Progress Schedule.
3. Submit with Each Progress Schedule Submission:
   a. Contractor's certification that Progress Schedule submission is actual schedule being utilized for execution of the Work.
   b. Disk file compatible with latest version of Project Planner (P3) by Primavera Systems, Inc., unless otherwise approved by Owner or Engineer.
   c. Progress Schedule: One legible copies.
   d. Narrative Progress Report: Same number of copies as specified for Progress Schedule.
4. Prior to final payment, submit a final Updated Progress Schedule.

### 1.02 DETAILED PROGRESS SCHEDULE

A. Submit Detailed Progress Schedule beginning with Notice to Proceed and continuing through Final Completion.

B. Show the duration and sequences of activities required for complete performance of the Work reflecting means and methods chosen by Contractor.

C. Format: In accordance with Article Progress Schedule—Critical Path Network.

D. Update monthly to reflect actual progress and occurrences to date, including weather delays.

### 1.03 PROGRESS SCHEDULE—CRITICAL PATH NETWORK

A. General: Comprehensive computer-generated schedule using CPM, generally as outlined in Associated General Contractors of America (AGC) 580,

"Construction Project Planning and Scheduling Guidelines." If a conflict occurs between the AGC publication and this Specification, this Specification shall govern.

B. Contents:

1. Schedule shall begin with the date of Notice to Proceed and conclude with the date of Final Completion.
2. Identify Work calendar basis using days as a unit of measure.
3. Show complete interdependence and sequence of construction and Project-related activities reasonably required to complete the Work.
4. Identify the Work of separate stages and other logically grouped activities, and clearly identify critical path of activities.
5. Reflect sequences of the Work, restraints, delivery windows, review times, Contract Times and Project Milestones set forth in the Agreement and Section 01040, Coordination.
6. Include as applicable, at a minimum:
   a. Obtaining permits, submittals for early product procurement, and long lead time items.
   b. Mobilization and other preliminary activities.
   c. Initial Site work.
   d. Specified Work sequences, constraints, and Milestones, including Completion of Startup date(s) Subcontract Work.
   e. Major equipment design, fabrication, factory testing, and delivery dates.
   f. Delivery dates for Owner-furnished products, as specified in Section 01010, Summary of Work.
   g. Sitework.
   h. Concrete Work.
   i. Structural steel Work.
   j. Architectural features Work.
   k. Conveying systems Work.
   l. Equipment Work.
   m. Mechanical Work.
   n. Electrical Work.
   o. Instrumentation and control Work.
   p. Interfaces with Owner-furnished equipment.
   q. Other important Work for each major facility.
   r. Equipment and system startup and test activities.
   s. Project closeout and cleanup.
   t. Demobilization.
7. No activity duration, exclusive of those for Submittals review and product fabrication/delivery, shall be less than 1 day nor more than 30 days, unless otherwise approved.

8. Activity duration for Submittal review shall not be less than review time specified unless clearly identified and prior written acceptance has been obtained from Engineer.

C. Network Graphical Display:

1. Plot or print on paper not greater than 30 inches by 42 inches or smaller than 22 inches by 34 inches, unless otherwise approved.
2. Title Block: Show name of Project, Owner, date submitted, revision or update number, and the name of the scheduler. Updated schedules shall indicate data date.
3. Identify horizontally across top of schedule the time frame by year, month, and day.
4. Identify each activity with a unique number and a brief description of the Work associated with that activity.
5. Indicate the critical path.
6. Show, at a minimum, the controlling relationships between activities.
7. Plot activities on a time-scaled basis, with the length of each activity proportional to the current estimate of the duration.
8. Plot activities on an early start basis unless otherwise requested by Engineer.
9. Provide a legend to describe standard and special symbols used.

D. Schedule Report:

1. On 8-1/2-inch by 11-inch white paper, unless otherwise approved.
2. List information for each activity in tabular format, including , at a minimum:
   a. Activity Identification Number.
   b. Activity Description.
   c. Original Duration.
   d. Remaining Duration.
   e. Early Start Date (Actual start on Updated Progress Schedules).
   f. Early Finish Date (Actual finish on Updated Progress Schedules).
   g. Late Start Date.
   h. Late Finish Date.
   i. Total Float.
3. Sort reports, in ascending order, as listed below:
   a. Activity number sequence with predecessor and successor activity.

## 1.04 PROGRESS OF THE WORK

A. Updated Progress Schedule shall reflect:

1. Progress of Work to within 5 working days prior to submission.

2. Approved changes in Work scope and activities modified since submission.
3. Delays in Submittals or resubmittals, deliveries, or Work.
4. Adjusted or modified sequences of Work.
5. Other identifiable changes.
6. Revised projections of progress and completion.
7. Report of changed logic.

B. Produce detailed subschedules during Project, upon request of Owner or Engineer, to further define critical portions of the Work such as facility shutdowns.

C. If Contractor fails to complete activity by its latest scheduled completion date and this Failure is anticipated to extend Contract Times (or Milestones), Contractor shall, within 7 days of such failure, submit a written statement as to how Contractor intends to correct nonperformance and return to acceptable current Progress Schedule. Actions by Contractor to complete the Work within Contract Times (or Milestones) will not be justification for adjustment to Contract Price or Contract Times.

D. Owner may order Contractor to increase plant, equipment, labor force or working hours if Contractor fails to:

1. Complete a Milestone activity by its completion date.
2. Satisfactorily execute Work as necessary to prevent delay to overall completion of Project, at no additional cost to Owner.

## 1.05 NARRATIVE PROGRESS REPORT

A. Format:

1. Organize same as Progress Schedule.
2. Identify, on a cover letter, reporting period, date submitted, and name of author of report.

B. Contents:

1. Number of days worked over the period, work force on hand, construction equipment on hand (including utility vehicles such as pickup trucks, maintenance vehicles, stake trucks).
2. General progress of Work, including a listing of activities started and completed over the reporting period, mobilization/demobilization of subcontractors, and major milestones achieved.
3. Contractor's plan for management of Site (e.g., lay down and staging areas, construction traffic), utilization of construction equipment, buildup of trade labor, and identification of potential Contract changes.

4. Identification of new activities and sequences as a result of executed Contract changes.
5. Documentation of weather conditions over the reporting period, and any resulting impacts to the work.
6. Description of actual or potential delays, including related causes, and the steps taken or anticipated to mitigate their impact.
7. Changes to activity logic.
8. Changes to the critical path.
9. Identification of, and accompanying reason for, any activities added or deleted since the last report.
10. Steps taken to recover the schedule from Contractor-caused delays.

## 1.06 SCHEDULE ACCEPTANCE

A. Engineer's acceptance will demonstrate agreement that:

1. Proposed schedule is accepted with respect to:
   a. Contract Times, including Final Completion and all intermediate Milestones are within the specified times.
   b. Specified Work sequences and constraints are shown as specified.
   c. Specified Owner-furnished Equipment or Material arrival dates, or range of dates, are included.
   d. Access restrictions are accurately reflected.
   e. Startup and testing times are as specified.
   f. Submittal review times are as specified.
   g. Startup testing duration is as specified and timing is acceptable.
2. In all other respects, Engineer's acceptance of Contractor's schedule indicates that, in Engineer's judgement, schedule represents reasonable plan for constructing Project in accordance with the Contract Documents. Engineer's review will not make any change in Contract requirements. Lack of comment on any aspect of schedule that is not in accordance with the Contract Documents will not thereby indicate acceptance of that change, unless Contractor has explicitly called the nonconformance to Engineer's attention in submittal. Schedule remains Contractor's responsibility and Contractor retains responsibility for performing all activities, for activity durations, and for activity sequences required to construct Project in accordance with the Contract Documents.

B. Unacceptable Preliminary Progress Schedule:

1. Make requested corrections; resubmit within 10 days.
2. Until acceptable to Engineer as Baseline Progress Schedule, continue review and revision process, during which time Contractor shall update

schedule on a monthly basis to reflect actual progress and occurrences to date.

C. Unacceptable Detailed Progress Schedule:

1. Make requested corrections; resubmit within 10 days.
2. Until acceptable to Engineer as Baseline Progress Schedule, continue review and revision process.

D. Narrative Report: All changes to activity duration and sequences, including addition or deletion of activities subsequent to Engineer's acceptance of Baseline Progress Schedule, shall be delineated in Narrative Report current with proposed Updated Progress Schedule.

## 1.07 ADJUSTMENT OF CONTRACT TIMES

A. Float:

1. Float time is a Project resource available to both parties to meet contract Milestones and Contract Times.
2. Use of float suppression techniques such as preferential sequencing or logic, special lead/lag logic restraints, and extended activity times are prohibited, and use of float time disclosed or implied by use of alternate float-suppression techniques shall be shared to proportionate benefit of Owner and Contractor.
3. Pursuant to above float-sharing requirement, no time extensions will be granted nor delay damages paid until a delay occurs which (i) impacts Project's critical path, (ii) consumes available float or contingency time, and (iii) extends Work beyond contract completion date.

B. Claims Based on Contract Times:

1. Where Engineer has not yet rendered formal decision on Contractor's Claim for adjustment of Contract Times, and parties are unable to agree as to amount of adjustment to be reflected in Progress Schedule, Contractor shall reflect an interim adjustment in the Progress Schedule as acceptable to Engineer.
2. It is understood and agreed that such interim acceptance will not be binding on either Contractor or Owner, and will be made only for the purpose of continuing to schedule Work until such time as formal decision has been rendered as to an adjustment, if any, of the Contract Times.
3. Contractor shall revise Progress Schedule prepared thereafter in accordance with Engineer's formal decision.

**PART 2 PRODUCTS (NOT USED)**

**PART 3 EXECUTION (NOT USED)**

**END OF SECTION**

# SECTION 01430
# OPERATION AND MAINTENANCE DATA

## PART 1 GENERAL

1.01 SECTION INCLUDES

A. Detailed information for the preparation, submission, and Engineer's review of Operations and Maintenance (O&M) Data, as required by individual Specification sections.

1.02 DEFINITIONS

A. Preliminary Data: Initial and subsequent submissions for Engineer's review.

B. Final Data: Engineer-accepted data, submitted as specified herein.

C. Maintenance Operation: As used on Maintenance Summary Form is defined to mean any routine operation required to ensure satisfactory performance and longevity of equipment. Examples of typical maintenance operations are lubrication, belt tensioning, adjustment of pump packing glands, and routine adjustments.

1.03 SEQUENCING AND SCHEDULING

A. Equipment and System Data:

1. Preliminary Data:
   a. Do not submit until Shop Drawing for equipment or system has been reviewed and approved by Engineer.
   b. Submit prior to shipment date.
2. Final Data: Submit Instructional Manual Formatted data not less than 30 days prior to equipment or system field functional testing. Submit Compilation Formatted and Electronic Media Formatted data prior to Completion of Startup.

1.04 DATA FORMAT

A. Prepare preliminary and final data in the form of an instructional manual.

B. Instructional Manual Format:

1. Binder: Commercial quality, permanent, three-ring or three-post binders with durable plastic cover.
2. Size: 8-1/2 inches by 11 inches, minimum.

3. Cover: Identify manual with typed or printed title "OPERATION AND MAINTENANCE DATA" and list:
   a. Project title.
   b. Designate applicable system, equipment, material, or finish.
   c. Identity of separate structure as applicable.
   d. Identity of general subject matter covered in manual. Identity of equipment number and Specification section.
4. Title Page:
   a. Contractor name, address, and telephone number.
   b. Subcontractor, Supplier, installer, or maintenance contractor's name, address, and telephone number, as appropriate.
      1) Identify area of responsibility of each.
      2) Provide name and telephone number of local source of supply for parts and replacement.
5. Table of Contents:
   a. Neatly typewritten and arranged in systematic order with consecutive page numbers.
   b. Identify each product by product name and other identifying numbers or symbols as set forth in Contract Documents.
6. Paper: 20-pound minimum, white for typed pages.
7. Text: Manufacturer's printed data, or neatly typewritten.
8. Three-hole punch data for binding and composition; arrange printing so that punched holes do not obliterate data.
9. Material shall be suitable for reproduction, with quality equal to original. Photocopying of material will be acceptable, except for material containing photographs.

## 1.05 SUBMITTALS

A. Informational:

1. Data Outline: Submit two copies of a detailed outline of proposed organization and contents of Final Data prior to preparation of Preliminary Data.
2. Preliminary Data:
   a. Submit two copies for Engineer's review.
   b. If data meets conditions of the Contract:
      1) One copy will be returned to Contractor.
      2) One copy will be forwarded to Resident Project Representative.
   c. If data does not meet conditions of the Contract:
      1) All copies will be returned to Contractor with Engineer's comments (on separate document) for revision.
      2) Engineer's comments will be retained in Engineer's file.

3) Resubmit two copies revised in accordance with Engineer's comments.

3. Final Data: Submit two copies in format specified herein and one copy on CD-ROM as a single, indexed Adobe Acrobat PDF file.

## 1.06 DATA FOR EQUIPMENT AND SYSTEMS

A. Content For Each Unit (or Common Units) and System:

1. Product Data:
   a. Include only those sheets that are pertinent to specific product.
   b. Clearly annotate each sheet to:
      1) Identify specific product or part installed.
      2) Identify data applicable to installation.
      3) Delete references to inapplicable information.
   c. Function, normal operating characteristics, and limiting conditions.
   d. Performance curves, engineering data, nameplate data, and tests.
   e. Complete nomenclature and commercial number of replaceable parts.
   f. Original manufacturer's parts list, illustrations, detailed assembly drawings showing each part with part numbers and sequentially numbered parts list, and diagrams required for maintenance.
   g. Spare parts ordering instructions.
   h. Where applicable, identify installed spares and other provisions for future work (e.g., reserved panel space, unused components, wiring, terminals).
2. As-installed, color-coded piping diagrams.
3. Charts of valve tag numbers, with the location and function of each valve.
4. Drawings: Supplement product data with Drawings as necessary to clearly illustrate:
   a. Format:
      1) Provide reinforced, punched, binder tab; bind in with text.
      2) Reduced to 8-1/2 inches by 11 inches, or 11 inches by 17 inches folded to 8-1/2 inches by 11 inches.
      3) Where reduction is impractical, fold and place in 8-1/2-inch by 11-inch envelopes bound in text.
      4) Identify Specification section and product on Drawings and envelopes.
   b. Relations of component parts of equipment and systems.
   c. Control and flow diagrams.
   d. Coordinate drawings with Project record documents to assure correct illustration of completed installation.

5. Instructions and Procedures: Within text, as required to supplement product data.
   a. Format:
      1) Organize in consistent format under separate heading for each different procedure.
      2) Provide logical sequence of instructions for each procedure.
      3) Provide information sheet for Owner's personnel, including:
         a) Proper procedures in event of failure.
         b) Instances that might affect validity of guarantee or Bond.
   b. Installation Instructions: Including alignment, adjusting, calibrating, and checking.
   c. Operating Procedures:
      1) Startup, break-in, routine, and normal operating instructions.
      2) Test procedures and results of factory tests where required.
      3) Regulation, control, stopping, and emergency instructions.
      4) Description of operation sequence by control manufacturer.
      5) Shutdown instructions for both short and extended duration.
      6) Summer and winter operating instructions, as applicable.
      7) Safety precautions.
      8) Special operating instructions.
   d. Maintenance and Overhaul Procedures:
      1) Routine maintenance.
      2) Guide to troubleshooting.
      3) Disassembly, removal, repair, reinstallation, and re-assembly.
6. Guarantee, Bond, and Service Agreement: In accordance with Section 01780, Contract Closeout.

B. Content for Each Electric or Electronic Item or System:

1. Description of Unit and Component Parts:
   a. Function, normal operating characteristics, and limiting conditions.
   b. Performance curves, engineering data, nameplate data, and tests.
   c. Complete nomenclature and commercial number of replaceable parts.
   d. Interconnection wiring diagrams, including control and lighting systems.
2. Circuit Directories of Panelboards:
   a. Electrical service.
   b. Controls.
   c. Communications.
3. List of electrical relay settings, and control and alarm contact settings.

4. Electrical interconnection wiring diagram, including control and lighting systems.
5. As-installed control diagrams by control manufacturer.
6. Operating Procedures:
   a. Routine and normal operating instructions.
   b. Sequences required.
   c. Safety precautions.
   d. Special operating instructions.
7. Maintenance Procedures:
   a. Routine maintenance.
   b. Guide to troubleshooting.
   c. Adjustment and checking.
   d. List of relay settings, control and alarm contact settings.
8. Manufacturer's printed operating and maintenance instructions.
9. List of original manufacturer's spare parts, manufacturer's current prices, and recommended quantities to be maintained in storage.

C. Maintenance Summary:

1. Compile individual Maintenance Summary for each applicable equipment item, respective unit or system, and for components or sub-units.
2. Format:
   a. Use Maintenance Summary Form bound with this section or electronic facsimile of such.
   b. Each Maintenance Summary may take as many pages as required.
   c. Use only 8-1/2-inch by 11-inch size paper.
   d. Complete using typewriter or electronic printing.
3. Include detailed lubrication instructions and diagrams showing points to be greased or oiled; recommend type, grade, and temperature range of lubricants and frequency of lubrication.
4. Recommended Spare Parts:
   a. Data to be consistent with manufacturer's Bill of Materials/Parts List furnished in O&M manuals.
   b. "Unit" is the unit of measure for ordering the part.
   c. "Quantity" is the number of units recommended.
   d. "Unit Cost" is the current purchase price.

1.07 SUPPLEMENT

A. The supplement listed below, following "End of Section," is part of this Specification.

1. Maintenance Summary Form.

**PART 2 PRODUCTS (NOT USED)**

**PART 3 EXECUTION (NOT USED)**

**END OF SECTION**

MAINTENANCE SUMMARY FORM

PROJECT:_____ CONTRACT NO.:_____

1. EQUIPMENT ITEM_____

2. MANUFACTURER _____

3. EQUIPMENT/TAG NUMBER(S) _____

4. WEIGHT OF INDIVIDUAL COMPONENTS (OVER 100 POUNDS)_____

5. NAMEPLATE DATA (hp, voltage, speed, etc.) _____

6. MANUFACTURER'S LOCAL REPRESENTATIVE _____

   a. Name_____ Telephone No. _____

   b. Address _____

7. MAINTENANCE REQUIREMENTS

| **Maintenance Operation Comments** | **Frequency** | **Lubricant (If Applicable)** |
|---|---|---|
| List briefly each maintenance operation required and refer to specific information in manufacturer's standard maintenance manual, if applicable. (Reference to manufacturer's catalog or sales literature is not acceptable.) | List required frequency of each maintenance operation. | Refer by symbol to lubricant required. |
| | | |
| | | |
| | | |
| | | |
| | | |
| | | |
| | | |
| | | |
| | | |

8. LUBRICANT LIST

| Reference Symbol | Shell | Exxon Mobile | Chevron Texaco | BP Amoco | Or Equal |
|---|---|---|---|---|---|
| List symbols used in No. 7 above. | List equivalent lubricants, as distributed by each manufacturer for the specific use recommended. | | | | |
| | | | | | |
| | | | | | |
| | | | | | |
| | | | | | |
| | | | | | |
| | | | | | |
| | | | | | |
| | | | | | |
| | | | | | |
| | | | | | |
| | | | | | |
| | | | | | |
| | | | | | |
| | | | | | |
| | | | | | |
| | | | | | |

9. RECOMMENDED SPARE PARTS FOR OWNER'S INVENTORY.

| Part No. | Description | Unit | Quantity | Unit Cost |
|---|---|---|---|---|
| | | | | |
| | | | | |
| | | | | |
| Note: Identify parts provided by this Contract with two asterisks. | | | | |

# SECTION 01500
# CONSTRUCTION FACILITIES AND TEMPORARY CONTROLS

## PART 1 GENERAL

### 1.01 REFERENCES

A. The following is a list of standards which may be referenced in this section:

1. Federal Emergency Management Agency.
2. NFPA, National Fire Prevention Standard for Safeguarding Building Construction Operations.
3. Telecommunications Industry Association (TIA); Electronic Industries Alliance (EIA): 568B, Commercial Building Telecommunications Cabling Standard.
4. U.S. Department of Agriculture: Urban Hydrology for Small Watersheds.
5. U.S. Weather Bureau: Rainfall-Frequency Atlas of the U.S. for Durations From 30 Minutes to 24 Hours and Return Periods From 1 to 100 Years.

### 1.02 SUBMITTALS

A. Informational Submittals:

1. Contractor will be required to obtain permits for offsite work only. Pursuant to CERCLA 121(e), "No Federal, State, or local permit shall be required for the portion of any removal or remedial action conducted entirely onsite, where such a remedial action is selected and carried out in compliance with this Section."
2. Copies of permits and approvals for construction as required by Laws and Regulations and governing agencies.

### 1.03 MOBILIZATION

A. Mobilization shall include, but not be limited to, these principal items:

1. Obtaining required permits.
2. Moving Contractor's field office and equipment required for first month operations onto Site.
3. Installing temporary construction power, wiring, and lighting facilities.
4. Providing onsite communication facilities, including telephones.

5. Providing onsite sanitary facilities and potable water facilities as specified and as required by Laws and Regulations, and governing agencies.
6. Arranging for and erection of Contractor's work and storage yard.
7. Posting OSHA required notices and establishing safety programs and procedures.
8. Having Contractor's superintendent at Site full time.

1.04 PROTECTION OF WORK AND PROPERTY

A. Comply with Owner's safety rules while on Owner's property.

B. Keep Owner informed of serious onsite accidents and related claims.

C. Use of Explosives: No blasting or use of explosives will be allowed onsite.

**PART 2 PRODUCTS**

2.01 PROJECT SIGN

A. Provide and maintain one, 8-foot wide by 4-foot high sign constructed of 3/4-inch exterior high density overlaid plywood. Sign shall bear name of Project, Owner, Contractor, Engineer, and other participating agencies. Lettering shall be blue applied on a white background by an experienced sign painter. Paint shall be exterior type enamel. Information to be included will be provided by Owner.

**PART 3 EXECUTION**

3.01 TEMPORARY UTILITIES

A. Power:

1. Electric power will be available at the Site.
2. Cost of electric power will be borne by Owner.

B. Lighting: Provide temporary lighting to meet applicable safety requirements to allow erection, application, or installation of materials and equipment, and observation or inspection of the Work.

C. Heating, Cooling, and Ventilating:

1. Provide as required to maintain adequate environmental conditions to facilitate progress of the Work, to meet specified minimum conditions

for installation of materials, and to protect materials, equipment, and finishes from damage due to temperature or humidity.

2. Provide adequate forced air ventilation of enclosed areas to cure installed materials, to dispense humidity, and to prevent hazardous accumulations of dust, fumes, vapors, or gases.
3. Pay all costs of installation, maintenance, operation, removal, and fuel consumed.
4. Provide portable unit heaters, complete with controls, oil- or gas-fired, and suitably vented to outside as required for protection of health and property.
5. If permanent natural gas piping is used for temporary heating units, do not modify or reroute gas piping without approval of utility company. Provide separate gas metering as required by utility.

D. Water: Owner will furnish construction and drinking water required at no cost to Contractor on Site. Furnish and install temporary piping and facilities to transport water to the Work.

E. Sanitary and Personnel Facilities:

1. Provide and maintain facilities for Contractor's employees, Subcontractors, and all other onsite employers' employees. Service, clean, and maintain facilities and enclosures.
2. Use of Owner's existing sanitary facilities by construction personnel will not be allowed.

F. Telephone Service:

1. Contractor: Arrange and provide onsite telephone service for use during construction. Pay costs of installation and monthly bills.

G. Fire Protection: Furnish and maintain on Site adequate firefighting equipment capable of extinguishing incipient fires. Comply with applicable parts of National Fire Prevention Standard for Safeguarding Building Construction Operations (NFPA No. 241).

## 3.02 PROTECTION OF WORK AND PROPERTY

A. General:

1. Maintain in continuous service all existing oil and gas pipelines, underground power, telephone or communication cable, water mains, irrigation lines, sewers, poles and overhead power, and all other utilities

encountered along line of the Work, unless other arrangements satisfactory to owners of said utilities have been made.

2. Where completion of the Work requires temporary or permanent removal or relocation of existing utility, coordinate all activities with owner of said utility and perform all work to their satisfaction.
3. Protect, shore, brace, support, and maintain underground pipes, conduits, drains, and other underground utility construction uncovered or otherwise affected by construction operations.
4. Keep fire hydrants and water control valves free from obstruction and available for use at all times.
5. In areas where Contractor's operations are adjacent to or near a utility, such as gas, telephone, television, electric power, water, sewer, or irrigation system, and such operations may cause damage or inconvenience, suspend operations until arrangements necessary for protection have been made by Contractor.
6. Maintain original Site drainage wherever possible.

B. Site Security:

1. Maintain existing fence throughout construction period.
2. Provide and maintain additional temporary security fences as necessary to protect the Work and Contractor-furnished products not yet installed.

C. Barricades and Lights:

1. Provide as required by the Washington Vehicle Code and in sufficient quantity to safeguard public and the Work.
2. Provide as necessary to prevent unauthorized entry to construction areas and affected roads, streets, and alleyways, inside and outside of fenced area, and as required to ensure public safety and the safety of Contractor's employees, other employer's employees, and others who may be affected by the Work.
3. Provide to protect existing facilities and adjacent properties from potential damage.
4. Locate to enable access by facility operators and property owners.
5. Protect streets, roads, highways, and other public thoroughfares that are closed to traffic by effective barricades with acceptable warning signs.
6. Locate barricades at the nearest intersecting public thoroughfare on each side of the blocked section.
7. Illuminate barricades and obstructions with warning lights from sunset to sunrise.

D. Trees and Plantings:

1. Protect from damage and preserve trees, shrubs, and other plants outside limits of the Work and within limits of the Work, which are designated on the Drawings to remain undisturbed.
   a. Where practical, tunnel beneath trees when on or near line of trench.
   b. Employ hand excavation as necessary to prevent tree injury.
   c. Do not stockpile materials or permit traffic within drip lines of trees.
   d. Provide and maintain temporary barricades around trees.
   e. Water vegetation as necessary to maintain health.
   f. Cover temporarily exposed roots with wet burlap, and keep burlap moist until soil is replaced around roots.
   g. No trees, except those specifically shown on Drawings to be removed, shall be removed without written approval of Engineer.
   h. Dispose of removed trees in a legal manner off the Site.
2. Balling and burlapping of trees indicated for replacement shall conform to recommended specifications set forth in the American Standards for Nursery Stock, published by American Association of Nurserymen. All balls shall be firm and intact and made-balls will not be accepted. Handle ball and burlap trees by ball and not by top.
3. In event of damage to bark, trunks, limbs, or roots of plants that are not designated for removal, treat damage by corrective pruning, bark tracing, application of a heavy coating of tree paint, and other accepted horticultural and tree surgery practices.
4. Replace each plant that dies as a result of construction activities.

E. Existing Structures:

1. Where Contractor contemplates removal of small operations structures, obtain approval of Owner or Engineer.
2. Replace items removed in their original location and a condition equal to or better than original.

F. Waterways: Keep ditches, culverts, and natural drainages continuously free of construction materials and debris.

G. Surface Water Control: Construct, maintain, and operate cofferdams, channels, flume drains, sumps, pumps, or other temporary diversion and protection works. Furnish materials required, install, maintain, and operate necessary pumping and other equipment for the environmentally safe removal

and disposal of water from the various parts of the Work. Maintain foundations and parts of the Work free from water.

H. Archaeological Finds:

1. General: Should finds of an archaeological or paleontological nature be made within the limits of the Site, immediately notify Owner and Engineer. Continue the Work in other areas without interruption.
2. Archaeological Finds: Evidence of human occupation or use of an area within the contract limits prior to the Year 1840. Evidence may consist of skeletons, stone, or other utensils, or evidence of habitations or structures.
3. Paleontological Finds: Evidence of prehistoric plant or animal life, such as skeletons, bones, fossils, or casts and other indications such as pictographs.
4. Owner may order the Work stopped in other areas if, in Owner's opinion, the find is more extensive than may appear from uncovered material.
5. Protection of Finds:
   a. Cover, fence, or otherwise protect finds until notice to resume the Work is given.
   b. Cover finds with plastic film held in place by earth, rocks, or other weights placed outside the find. Should additional backfilling be necessary for safety or to prevent caving, place backfill material loosely over the plastic film.
   c. Sheet or shore as necessary to protect excavations underway. Place temporary fence to prevent unauthorized access.
   d. Dewater finds made below water table as necessary to protect construction Work underway. Divert groundwater or surface runoff away from find by ditching or other acceptable means.
6. Removal of Finds:
   a. All finds are property of Owner. Do not remove or disturb finds without Owner's written authorization.
   b. Should Owner elect to have a find removed, provide equipment, labor, and material to permit safe removal of find without damage. Provide transportation for delivery to individuals, institutions, or other places as Owner may find desirable, expedient, or required by law.

I. Endangered Species:

1. Take precautions necessary and prudent to protect native endangered flora and fauna.

2. Notify Engineer of construction activities that might threaten endangered species or their habitats.
3. Engineer will mark areas known as habitats of endangered species prior to commencement of onsite activities.
4. Additional areas will be marked by Engineer as other habitats of endangered species become known during construction.

3.03 TEMPORARY CONTROLS

A. Air Pollution Control:

1. Minimize air pollution from construction operations.
2. Burning: Of waste materials, rubbish, or other debris will not be permitted on or adjacent to Site.
3. Conduct operations of dumping rock and of carrying rock away in trucks to cause a minimum of dust. Give unpaved streets, roads, detours, or haul roads used in construction area a dust-preventive treatment or periodically water to prevent dust. Strictly adhere to applicable environmental regulations for dust prevention.
4. Provide and maintain temporary dust-tight partitions, bulkheads, or other protective devices during construction to permit normal operation of existing facilities. Construct partitions of plywood, insulating board, plastic sheets, or similar material. Construct partitions in such a manner that dust and dirt from demolition and cutting will not enter other parts of existing building or facilities. Remove temporary partitions as soon as need no longer exists.

B. Noise Control: Provide acoustical barriers so noise emanating from tools or equipment will not exceed legal noise levels.

C. Water Pollution Control:

1. Divert sanitary sewage and nonstorm waste flow interfering with construction and requiring diversion to sanitary sewers. Do not cause or permit action to occur which would cause an overflow to existing waterway.
2. Prior to commencing excavation and construction, obtain Owner's agreement with detailed plans showing procedures intended to handle and dispose of sewage, groundwater, and stormwater flow, including dewatering pump discharges.
3. Comply with procedures outlined in U.S. Environmental Protection Agency manuals entitled, "Guidelines for Erosion and Sedimentation Control Planning" and "Implementation, Processes, Procedures, and

Methods to Control Pollution Resulting from All Construction Activity," and "Erosion and Sediment Control-Surface Mining in Eastern United States."

4. Do not dispose of volatile wastes such as mineral spirits, oil, chemicals, or paint thinner in storm or sanitary drains. Disposal of wastes into streams or waterways is prohibited. Provide acceptable containers for collection and disposal of waste materials, debris, and rubbish.

D. Erosion, Sediment, and Flood Control: Provide, maintain, and operate temporary facilities to control erosion and sediment releases, and to protect the Work and existing facilities from flooding during construction period.

## 3.04 STORAGE YARDS AND BUILDINGS

A. Coordinate requirements with Section 01600, Material and Equipment.

B. Temporary Storage Yards: Construct temporary storage yards for storage of products that are not subject to damage by weather conditions.

C. Temporary Storage Buildings:

1. Provide environmental control systems that meet recommendations of manufacturers of equipment and materials stored.
2. Arrange or partition to provide security of contents and ready access for inspection and inventory.
3. Store combustible materials (paints, solvents, fuels) in a well-ventilated and remote building meeting safety standards.

## 3.05 ACCESS ROADS AND DETOURS

A. Construct access roads as shown and within easements, rights-of-way, or Project limits. Utilize existing roads where shown. Alignments for new routes shall be approved by Engineer.

B. Maintain drainage ways. Install and maintain culverts to allow water to flow beneath access roads. Provide corrosion-resistant culvert pipe of adequate strength to resist construction loads.

C. Provide gravel, crushed rock, or other stabilization material to permit access by all motor vehicles at all times.

D. Maintain road grade and crown to eliminate potholes, rutting, and other irregularities that restrict access.

E. Coordinate with Engineer detours and other operations affecting traffic and access. Provide at least 72 hours' notice to Engineer of operations that will alter access to the Site and affect existing plant operations.

F. Where access road crosses existing fences, install and maintain gates. Gates and gate posts shall conform to those as specified in Section 02821, Chain Link Fences and Gates.

G. Upon completion of construction, restore ground surface disturbed by access road construction to original grade. Replace damaged or broken culverts with new culvert pipe of same diameter and material.

3.06 PARKING AREAS

A. Control vehicular parking to preclude interference with public traffic or parking, access by emergency vehicles, Owner's operations, or construction operations.

B. Provide parking facilities for personnel working on the Project. No employee or equipment parking will be permitted on Owner's existing roadway.

3.07 VEHICULAR TRAFFIC

A. Comply with Laws and Regulations regarding closing or restricting use of public streets or highways. No public or private road shall be closed, except by written permission of proper authority. Assure the least possible obstruction to traffic and normal commercial pursuits.

B. Conduct the Work to interfere as little as possible with public travel, whether vehicular or pedestrian.

C. Whenever it is necessary to cross, close, or obstruct roads, driveways, and walks, whether public or private, provide and maintain suitable and safe bridges, detours, or other temporary expedients for accommodation of public and private travel.

D. When flaggers and guards are required by regulation or when deemed necessary for safety, furnish them with approved orange wearing apparel and other regulation traffic control devices.

3.08 CLEANING DURING CONSTRUCTION

A. In accordance with General Clause 77—52.236-12, as may be specified in other Specification sections, and as required herein.

B. Wet down exterior surfaces prior to sweeping to prevent blowing of dust and debris. At least weekly, sweep all floors (basins, tunnels, platforms, walkways, roof surfaces), and pick up all debris and dispose.

C. Provide approved containers for collection and disposal of waste materials, debris, and rubbish. At least at weekly intervals, dispose of such waste materials, debris, and rubbish offsite.

D. At least weekly, brush sweep entry drive and roadways, and all other streets and walkways affected by the Work and where adjacent to the Work.

**END OF SECTION**

# SECTION 01570
# EROSION AND SEDIMENT CONTROL

## PART 1 GENERAL

### 1.01 DEFINITIONS

A. Soil Erosion Stabilization:

1. Ground surfaces exposed during the wet season (November 1 through March 31).
2. Areas which will not be subjected to heavy wear by ongoing construction traffic.
3. Temporary and long term stabilization of new or disturbed ditches, swales, or disturbed ground with intermittence construction traffic.

### 1.02 SUBMITTALS

A. Action Submittals:

1. Product Data: Commercial products.

B. Informational Submittals: Certificates of inspection of seed by state or Federal authorities and copies of delivery invoices or other proof of quantities of fertilizer.

C. Quality Control Submittals: Prepare a Grading, Drainage, Erosion, Sedimentation Control (GDESC) Plan according to the City of Bainbridge Island Design and Construction Standards and Specifications.

### 1.03 DELIVERY, STORAGE, AND PROTECTION

A. Seed:

1. Furnish in standard containers with seed name, lot number, net weight, percentages of purity, germination, and hard seed and maximum weed seed content, clearly marked for each container of seed.
2. Keep dry during storage.

B. Hydroseeding Mulch: Mark package of wood fiber mulch to show air dry weight.

### 1.04 SEQUENCING AND SCHEDULING

A. Obtain permits specified in Article Submittals, paragraph Quality Control Submittals above, prior to installing erosion and sediment control devices.

B. Install erosion and sediment control devices before starting earth disturbance activities.

C. Complete Soil Preparation: Seeding, fertilizing, mulching and matting on disturbed ground not receiving hard surface that will be disturbed for 2 days during the wet season or 7 days during the dry season.

D. Notify Engineer at least 3 days in advance of:

1. Materials delivery.
2. Start of stabilization activity.

E. Seeding: Seeding and mulching to disturbed surfaces ,which will not be subjected to construction traffic shall be completed by September 1 to have an established stand by November 1.

1.05 MAINTENANCE

A. Operations:

1. Seeded Areas: Perform during construction period to include:
   a. Watering: Keep seeded surface moist.
   b. Washouts: Repair by filling with topsoil, fertilizing, seeding, and mulching.
   c. Mulch: Replace wherever and whenever washed or blown away.
   d. Reseed unsatisfactory areas or portions thereof immediately if a satisfactory stand has not been produced.
2. Inspect, repair, and replace as necessary all erosion control measures during the time period from start of construction to completion of construction. Inspect a minimum of at least once every 7 days or after a 1/2-inch storm event in a 24-hour period. At no time shall more than one-foot of sediment be allowed to accumulate in any erosion control device, the cleaning operation shall not dispose of sediment offsite.

## PART 2 PRODUCTS

2.01 FERTILIZER

A. Commercial, uniform in composition, free-flowing, not less than 50 percent organic nonburning composed product suitable for application with equipment designed for that purpose.

B. Fertilizer shall have the following minimum percentage of plant food by weight:

1. Granular Form Fertilizer:
   a. Nitrogen: 16 percent.
   b. Phosphoric Acid: 16 percent.
   c. Potash: 16 percent.

2.02 SEED

A. Summer seed mix shall be 50 percent by weight Tall Fescue, 30 percent by weight Sericea Lespedeza, and 20 percent by weight German Millet.

B. Winter seed mix shall be 50 percent by weight Tal Fescue, 30 percent by weight Sericea Lespedeza, 15 percent by weight Annual Ryegrass, and 5 percent by weight Redtop.

2.03 MULCH

A. Wood Cellulose Fiber Mulch:

1. Specially processed wood fiber containing no growth or germination inhibiting factors.
2. Dyed a suitable color to facilitate inspection of material placement.
3. Manufactured such that after addition and agitation in slurry tanks with water, the material fibers will become uniformly suspended to form a homogenous slurry.
4. When hydraulically sprayed on ground, material will allow absorption and percolation of moisture.

2.04 SOIL TACKIFIER

A. Derived from natural organic plant sources containing no growth or germination-inhibiting materials.

B. Capable of hydrating in water, and to readily blend with other slurry materials.

C. Wood Cellulose Fiber: Add as tracer, at rate of 150 pounds per acre.

D. Manufacturers and Products:

1. Chevron Asphalt Co.; CSS-1.
2. Terra; Tack AR.
3. J-Tack; Reclamare.

## 2.05 REINFORCED PLASTIC COVERING

A. Co-extruded, copolymer laminate reinforced with a nonwoven grid of high strength nylon cord submersed in a permanently flexible adhesive media allowing for equal tear resistance in all directions.

B. Black in color and ultraviolet stabilized.

C. Physical Requirement (Minimum Average Roll Values):

1. Tear Strength: 130 pounds.
2. Elongation: 620 percent.
3. Minimum Thickness: 6 mil.

D. Manufacturers:

1. Reef Industries, Inc., Houston, TX.
2. Griffolyn Co., Houston, TX.

## 2.06 CLEARING LIMIT FENCE

A. Ultraviolet stabilized polyethylene or polypropylene safety fence, 3 feet in height, and yellow or orange in color.

## 2.07 SILT/SEDIMENT FENCE

A. Wire Mesh Material: As recommended by manufacturer of filter fabric; strong enough to support applied loads.

B. Support Posts: As recommended by manufacturer of filter fabric.

C. Fasteners: Heavy-duty wire staples at least 1-inch long, tie wires, or hog rings, as recommended by manufacturer of geotextile.

D. Filter Fabric: Polyester, polypropylene, or nylon filaments, woven into a uniform pattern, distinct and measurable openings.

1. Filaments: Resistant to damage from exposure to ultraviolet rays and heat.
2. Material Edges: Finish so that, filaments retain their relative positions under stress.

E. In accordance with requirements of Table No. 1:

| Table No. 1 - Filter Fabric | | |
|---|---|---|
| **Physical Property** | **Required Value** | **Test Method** |
| Weight, oz/sq yd, min. | 4 | ASTM D3776 |
| Equivalent Opening Size, max. | 50-70 | U.S. Standard Sieve |
| Grab Tensile Strength, lb, min. | 160 | ASTM D4632 |
| Elongation, % max. | 25 | ASTM D1682 |
| Mullen Burst Strength, psi, min. | 350 | ASTM D3786 |
| Ultraviolet Radiation Resistance, % Strength Retention | 70 | ASTM D4355 |

F. Manufacturers:

1. Polyfelt, Evergreen, AL.
2. Dupont Co., Wilmington, DE.
3. Mirafi, Inc., Charlotte, NC.

2.08 BIOFILTER BAGS

A. Bags: Made of burlap, jute, geotextile or other pervious material capable of holding contents while allowing water to pass through bag. Bags shall have minimum dimensions of 2 feet long by 1 foot high by 1 foot wide.

B. Contents: Wood chips, bark, straw or other approved material.

2.09 STRAW BALES

A. Machine baled clean salt hay or straw of oats, barley, or rye free from seed of noxious weeds, using standard baling wire or string.

2.10 POSTS FOR STRAW BALES

A. 2-inch by 2-inch untreated wood or commercially manufactured metal posts.

## PART 3 EXECUTION

### 3.01 GENERAL

A. Erosion control measures are required during all construction and site disturbance activity and shall remain until permanent site ground covers are in place.

### 3.02 SOIL PREPARATION

A. Before start of seeding, and after surface has been shaped and graded, and lightly compacted to uniform grade, scarify soil surface to minimum depth of 1 inch.

### 3.03 FERTILIZER

A. Apply evenly over area in accordance with manufacturer's instructions. Mix into top 1-inch of soil.

B. Application Rate: 23 pounds per 1,000 square feet (1,000 pounds per acre).

### 3.04 SEEDING

A. Prepare 1-inch depth seed bed; obtain Engineer's acceptance prior to proceeding.

B. Uniformly spread 2 to 3 inches of seed/compost mixture of fully cover area to be seeded.

C. Application: Prepare and apply seed/compost as follows:

1. Seed Mix: 4 pounds per 1,000 square feet.
2. Compost: 2-inch to 3-inch thickness.
3. Water: As necessary.
4. Uniformly and thoroughly water area and keep moist until growth has been established and accepted by the Engineer.

### 3.05 MULCHING

A. Apply uniformly on disturbed areas that will remain undisturbed for 7 days or more, as requested by Engineer, and on all seeded areas with a slope steeper than 5 percent.

B. Application: Sufficiently loose to permit penetration of sunlight and air circulation, and sufficiently dense to shade ground, reduce evaporation rate, and prevent or materially reduce erosion of underlying soil.

1. Wood Cellulose Fiber: 1,000 to 1,500 pounds per acre.

3.06 SOIL TACKIFIER

A. Apply on areas mulched.

B. Spray on after mulch is in place.

C. Apply in quantities sufficient to equal retention properties of a CSS-1 asphalt emulsion being applied at rate of 400 gallons per acre.

3.07 REINFORCED PLASTIC COVERING

A. Place on areas where hydroseeding and erosion control matting have not controlled erosion, and over all temporary stockpiles.

B. Install in single thickness, strips parallel to direction of drainage.

C. Maintain tightly in place by using sand bags on ropes with a maximum 10-foot grid spacing in all directions.

D. Tape or weight down full length, overlap seams at least 12 inches.

E. Remove at final acceptance unless notified otherwise by Engineer.

3.08 CLEARING LIMIT FENCE

A. Install in accordance with manufacturer's standard instructions and before beginning clearing and grubbing operations.

3.09 SILTS/SEDIMENT FENCE

A. Install prior to starting earth disturbing activities upslope of fence.

B. One-piece filter fabric or continuously sewn to make one-piece filter fabric for full height of the fence, including portion buried in the toe trench.

C. When joints are necessary, splice filter fabric together only at a support post, with a minimum 6-inch overlap, and securely fasten both ends to support post.

D. Filter fabric shall not extend more than 30 inches above the ground surface. Securely fasten to upslope side of each support post using ties. Filter fabric shall not be stapled to existing trees.

E. Fasten wire mesh material support fence securely to upslope side of post fasteners. Extend wire into the trench a minimum of 4 inches, and not more than 30 inches above the ground surface.

F. Take precaution not to puncture filter fabric during installation. Repair or replace damaged area.

G. Remove support fence for filter fabric after upslope area has been permanently stabilized. Immediately dress sediment deposits remaining after the silt/sediment fence has been removed to conform to existing grade. Prepare and seed graded area.

3.10 TEMPORARY SOIL STOCKPILES

A. Cover with reinforced plastic covering, as directed in Article Reinforced Plastic Covering.

B. Protect perimeter of stockpile from erosion with sediment fence.

3.11 BIOFILTER BAGS

A. Place in locations shown in sufficient quantity to provide filtration and to prevent movement of bags. Provide means of stabilization if required.

3.12 CLEAN-UP

A. Sediment trapped in erosion control devices shall be removed from the site or regraded into the slopes on the site.

B. After site restoration is complete and when approved by the Engineer, all temporary erosion control measures shall be completely removed.

C. Sediment fence, straw bales, reinforced plastic covering, and any other erosion control devices shall be disposed off site to locations that are approved by Federal, state, and local authorities.

**END OF SECTION**

# SECTION 01600
# MATERIAL AND EQUIPMENT

## PART 1 GENERAL

### 1.01 DEFINITIONS

A. Products:

1. New items for incorporation in the Work, whether purchased by Contractor or Owner for the Project, or taken from previously purchased stock and may also include existing materials or components required for reuse.
2. Includes the terms material, equipment, machinery, components, subsystem, system, hardware, software, and terms of similar intent and is not intended to change meaning of such other terms used in Contract Documents, as those terms are self-explanatory and have well recognized meanings in construction industry.
3. Items identified by manufacturer's product name, including make or model designation, indicated in manufacturer's published product literature, that is current as of the date of the Contract Documents.

### 1.02 DESIGN REQUIREMENTS

A. Where Contractor design is specified, design of installation, systems, equipment, and components, including supports and anchorage, shall be in accordance with provisions of latest edition of International Building Code (IBC) by International Code Council. See structural notes on Drawings.

### 1.03 ENVIRONMENTAL REQUIREMENTS

A. Altitude: Provide materials and equipment suitable for installation and operation under rated conditions at 20 feet above sea level.

B. Provide equipment and devices installed outdoors or in unheated enclosures capable of continuous operation within an ambient temperature range of 0 degrees F to 110 degrees F.

### 1.04 PREPARATION FOR SHIPMENT

A. When practical, factory assemble products. Mark or tag separate parts and assemblies to facilitate field assembly. Cover machined and unpainted parts that may be damaged by the elements with strippable protective coating.

B. Package products to facilitate handling and protect from damage during shipping, handling, and storage. Mark or tag outside of each package or crate to indicate its purchase order number, bill of lading number, contents by name, name of Project and Contractor, equipment number, and approximate weight. Include complete packing list and bill of materials with each shipment.

C. Extra Materials, Special Tools, Test Equipment, and Expendables:

1. Furnish as required by individual Specifications.
2. Schedule:
   a. Ensure that shipment and delivery occurs concurrent with shipment of associated equipment.
   b. Transfer to Owner shall occur immediately subsequent to Contractor's acceptance of equipment from Supplier.
3. Packaging and Shipment:
   a. Package and ship extra materials and special tools to avoid damage during long term storage in original cartons insofar as possible, or in appropriately sized, hinged-cover, wood, plastic, or metal box.
   b. Prominently displayed on each package, the following:
      1) Manufacturer's part nomenclature and number, consistent with Operation and Maintenance Manual identification system.
      2) Applicable equipment description.
      3) Quantity of parts in package.
      4) Equipment manufacturer.
4. Replace extra materials and special tools found to be damaged or otherwise inoperable at time of transfer to Owner.

D. Factory Test Results: Reviewed and accepted by Engineer before product shipment as required in individual Specification sections.

## 1.05 DELIVERY AND INSPECTION

A. Deliver products in accordance with accepted current Progress Schedule and coordinate to avoid conflict with the Work and conditions at Site. Deliver anchor bolts and templates sufficiently early to permit setting prior to placement of structural concrete.

B. Deliver products in undamaged condition, in manufacturer's original container or packaging, with identifying labels intact and legible. Include on label, date of manufacture and shelf life, where applicable.

C. Unload products in accordance with manufacturer's instructions for unloading or as specified. Record receipt of products at Site. Promptly inspect for completeness and evidence of damage during shipment.

D. Remove damaged products from Site and expedite delivery of identical new undamaged products, and remedy incomplete or lost products to provide that specified, so as not to delay progress of the Work.

1.06 HANDLING, STORAGE, AND PROTECTION

A. Handle and store products in accordance with manufacturer's written instructions and in a manner to prevent damage. Store in approved storage yards or sheds provided in accordance with Section 01500, Construction Facilities and Temporary Controls. Provide manufacturer's recommended maintenance during storage, installation, and until products are accepted for use by Owner.

B. Arrange storage in a manner to provide easy access for inspection. Make periodic inspections of stored products to assure that products are maintained under specified conditions, and free from damage or deterioration. Keep running account of products in storage to facilitate inspection and to estimate progress payments for products delivered, but not installed in the Work.

C. Store electrical, instrumentation, and control products, and equipment with bearings in weather-tight structures maintained above 60 degrees F. Protect electrical, instrumentation, and control products, and insulation against moisture, water, and dust damage. Connect and operate continuously all space heaters furnished in electrical equipment.

D. Store fabricated products above ground on blocking or skids, and prevent soiling or staining. Store loose granular materials in well-drained area on solid surface to prevent mixing with foreign matter. Cover products that are subject to deterioration with impervious sheet coverings; provide adequate ventilation to avoid condensation.

E. Store finished products that are ready for installation in dry and well-ventilated areas. Do not subject to extreme changes in temperature or humidity.

F. After installation, provide coverings to protect products from damage due to traffic and construction operations. Remove coverings when no longer needed.

G. Hazardous Materials: Prevent contamination of personnel, storage building, and Site. Meet requirements of product specification, codes, and manufacturer's instructions.

## PART 2 PRODUCTS

### 2.01 GENERAL

A. Provide manufacturer's standard materials suitable for service conditions, unless otherwise specified in the individual Specifications.

B. Where product specifications include a named manufacturer, with or without model number, and also include performance requirements, named manufacturer's products must meet the performance specifications.

C. Like items of products furnished and installed in the Work shall be end products of one manufacturer and of the same series or family of models to achieve standardization for appearance, operation and maintenance, spare parts and replacement, manufacturer's services, and implement same or similar process instrumentation and control functions in same or similar manner.

D. All products shall be purchased in accordance with General Clause 52-52.225-15.

E. Do not use materials and equipment removed from existing premises, except as specifically permitted by Contract Documents.

F. Provide interchangeable components of the same manufacturer, for similar components, unless otherwise specified.

G. Equipment, Components, Systems, Subsystems: Design and manufacture with due regard for health and safety of operation, maintenance, and accessibility, durability of parts, and shall comply with applicable OSHA, state, and local health and safety regulations.

H. Regulatory Requirement: Coating materials shall meet federal, state, and local requirements limiting the emission of volatile organic compounds and for worker exposure.

I. Safety Guards: Provide for all belt or chain drives, fan blades, couplings, or other moving or rotary parts. Cover rotating part on all sides. Design for easy installation and removal. Use 16-gauge or heavier; galvanized steel, aluminum coated steel, or galvanized or aluminum coated 1/2-inch mesh expanded steel. Provide galvanized steel accessories and supports, including bolts. For outdoors application, prevent entrance of rain and dripping water.

J. Authority Having Jurisdiction (AHJ):

1. Provide the Work in accordance with NFPA 70, National Electrical Code (NEC). Where required by the AHJ, material and equipment shall be labeled or listed by a nationally recognized testing laboratory or other organization acceptable to the AHJ in order to provide a basis for approval under NEC.
2. Materials and equipment manufactured within the scope of standards published by Underwriters Laboratories, Inc. shall conform to those standards and shall have an applied UL listing mark.

K. Equipment Finish:

1. Provide manufacturer's standard finish and color, except where specific color is indicated.
2. If manufacturer has no standard color, provide equipment with finish as approved by Engineer.

L. Special Tools and Accessories: Furnish to Owner, upon acceptance of equipment, all accessories required to place each item of equipment in full operation. These accessory items include, but are not limited to, adequate oil and grease (as required for first lubrication of equipment after field testing), light bulbs, fuses, hydrant wrenches, valve keys, handwheels, chain operators, special tools, and other spare parts as required for maintenance.

M. Lubricant: Provide initial lubricant recommended by equipment manufacturer in sufficient quantity to fill lubricant reservoirs and to replace consumption during testing, startup, and operation until final acceptance by Owner.

## 2.02 FABRICATION AND MANUFACTURE

A. General:

1. Manufacture parts to U.S.A. standard sizes and gauges.
2. Two or more items of the same type shall be identical, by the same manufacturer, and interchangeable.
3. Design structural members for anticipated shock and vibratory loads.
4. Use 1/4-inch minimum thickness for steel that will be submerged, wholly or partially, during normal operation.
5. Modify standard products as necessary to meet performance Specifications.

B. Lubrication System:

1. Require no more than weekly attention during continuous operation.

2. Convenient and accessible. Oil drains with bronze or stainless steel valves and fill-plugs easily accessible from the normal operating area or platform. Locate drains to allow convenient collection of oil during oil changes without removing equipment from its installed position.
3. Provide constant-level oilers or oil level indicators for oil lubrication systems.
4. For grease type bearings, which are not easily accessible, provide and install stainless steel tubing; protect and extend tubing to convenient location with suitable grease fitting.

2.03 SOURCE QUALITY CONTROL

A. Where Specifications call for factory testing to be witnessed by Engineer, notify Engineer not less than 14 days prior to scheduled test date, unless otherwise specified.

B. Calibration Instruments: Bear the seal of a reputable laboratory certifying instrument has been calibrated within the previous 12 months to a standard endorsed by the National Institute of Standards and Technology (NIST).

C. Factory Tests: Perform in accordance with accepted test procedures and document successful completion.

**PART 3 EXECUTION**

3.01 INSPECTION

A. Inspect materials and equipment for signs of pitting, rust decay, or other deleterious effects of storage. Do not install material or equipment showing such effects. Remove damaged material or equipment from the Site and expedite delivery of identical new material or equipment. Delays to the Work resulting from material or equipment damage that necessitates procurement of new products will be considered delays within Contractor's control.

3.02 INSTALLATION

A. Equipment Drawings show general locations of equipment, devices, and raceway, unless specifically dimensioned.

B. No shimming between machined surfaces is allowed.

C. Install the Work in accordance with NECA Standard of Installation, unless otherwise specified.

D. Repaint painted surfaces that are damaged prior to equipment acceptance.

E. Do not cut or notch any structural member or building surface without specific approval of Engineer.

F. Handle, install, connect, clean, condition, and adjust products in accordance with manufacturer's instructions, and as may be specified. Retain a copy of manufacturers' instruction at Site, available for review at all times.

G. For material and equipment specifically indicated or specified to be reused in the Work:

1. Use special care in removal, handling, storage, and reinstallation to assure proper function in the completed Work.
2. Arrange for transportation, storage, and handling of products that require offsite storage, restoration, or renovation. Include costs for such Work in the Contract Price.

3.03 FIELD FINISHING

A. In accordance with Section 09900, Painting and Protective Coatings, and individual Specification sections.

3.04 ADJUSTMENT AND CLEANING

A. Perform required adjustments, tests, operation checks, and other startup activities.

3.05 LUBRICANTS

A. Fill lubricant reservoirs and replace consumption during testing, startup, and operation prior to acceptance of equipment by Owner.

**END OF SECTION**

# SECTION 01640
# MANUFACTURERS' SERVICES

## PART 1 GENERAL

### 1.01 DEFINITIONS

A. Person-Day: One person for 8 hours within regular Contractor working hours.

### 1.02 SUBMITTALS

A. Informational Submittals:

1. Training Schedule: Submit not less than 21 days prior to start of equipment installation and revise as necessary for acceptance.
2. Lesson Plan: Submit proposed lesson plan not less than 21 days prior to scheduled training and revise as necessary for acceptance.
3. Training Session Tapes: Furnish Owner with two complete sets of tapes fully indexed and cataloged with printed label stating session and date taped.

### 1.03 QUALIFICATION OF MANUFACTURER'S REPRESENTATIVE

A. Authorized representative of the manufacturer, factory trained, and experienced in the technical applications, installation, operation, and maintenance of respective equipment, subsystem, or system, with full authority by the equipment manufacturer to issue the certifications required of the manufacturer. Additional qualifications may be specified elsewhere.

B. Representative subject to acceptance by Owner and Engineer. No substitute representatives will be allowed unless prior written approval by such has been given.

## PART 2 PRODUCTS (NOT USED)

## PART 3 EXECUTION

### 3.01 FULFILLMENT OF SPECIFIED MINIMUM SERVICES

A. Furnish manufacturers' services when required by an individual specification section, to meet the requirements of this Section.

B. Where time is necessary in excess of that stated in the Specifications for manufacturers' services, or when a minimum time is not specified, the time required to perform the specified services shall be considered incidental.

C. Schedule manufacturer' services to avoid conflict with other onsite testing or other manufacturers' onsite services.

D. Determine, before scheduling services, that all conditions necessary to allow successful testing have been met.

E. Only those days of service approved by Engineer will be credited to fulfill the specified minimum services.

F. When specified in individual specification sections, manufacturer's onsite services shall include:

1. Assistance during product (system, subsystem, or component) installation to include observation, guidance, instruction of Contractor's assembly, erection, installation or application procedures.
2. Inspection, checking, and adjustment as required for product (system, subsystem, or component) to function as warranted by manufacturer and necessary to furnish Manufacturer's Certificate of Proper Installation.
3. Providing, on a daily basis, copies of all manufacturers' representatives field notes and data to Engineer.
4. Revisiting the Site as required to correct problems and until installation and operation are acceptable to Engineer.
5. Resolution of assembly or installation problems attributable to, or associated with, respective manufacturer's products and systems.
6. Assistance during functional and performance testing, and facility startup and evaluation.
7. Training of Owner's personnel in the operation and maintenance of respective product as required.
8. Additional requirements may be specified elsewhere.

## 3.02 MANUFACTURER'S CERTIFICATE OF COMPLIANCE

A. When specified in individual Specification section, submit prior to shipment of product or material.

B. Engineer may permit use of certain materials or assemblies prior to sampling and testing if accompanied by accepted certification of compliance.

C. Signed by product manufacturer certifying that product or material specified conforms to or exceeds specified. Attach supporting reference data, affidavits, and certifications as appropriate.

D. May reflect recent or previous test results on material or product, if acceptable to Engineer.

## 3.03 MANUFACTURER'S CERTIFICATE OF PROPER INSTALLATION

A. When so specified, a Manufacturer's Certificate of Proper Installation form, a copy of which is attached to this section, shall be completed and signed by the equipment manufacturer's representative.

B. Such form shall certify that the signing party is a duly authorized representative of the manufacturer, is empowered by the manufacturer to inspect, approve, and operate their equipment and is authorized to make recommendations required to assure that the equipment is complete and operational.

## 3.04 TRAINING

A. General:

1. Furnish manufacturers' representatives for detailed classroom and hands-on training to Owner's personnel on operation and maintenance of specified product (system, subsystem, component) and as may be required in applicable Specifications.
2. Furnish trained, articulate personnel to coordinate and expedite training, to be present during training coordination meetings with Owner, and familiar with operation and maintenance manual information specified in Section 01430, Operation and Maintenance Data.
3. Manufacturer's representative shall be familiar with facility operation and maintenance requirements as well as with specified equipment.
4. Furnish complete training materials, to include operation and maintenance data, to be retained by each trainee.

B. Training Schedule:

1. List specified equipment and systems that require training services and show:
   a. Respective manufacturer.
   b. Estimated dates for installation completion.
   c. Estimated training dates.
2. Allow for multiple sessions when several shifts are involved.
3. Adjust schedule to ensure training of appropriate personnel as deemed necessary by Owner, and to allow full participation by manufacturers' representatives. Adjust schedule for interruptions in operability of equipment.
4. Coordinate with Section 01310, Progress Schedules, and Section 01810, Equipment Testing and Facility Startup.

C. Lesson Plan: When manufacturer or vendor training of Owner personnel is specified, prepare for each required course, containing the following minimum information:

1. Title and objectives.
2. Recommended types of attendees (e.g., managers, engineers, operators, maintenance).
3. Course description and outline of course content.
4. Format (e.g., lecture, self-study, demonstration, hands-on).
5. Instruction materials and equipment requirements.
6. Resumes of instructors providing the training.

D. Pre-startup Training:

1. Coordinate training sessions with Owner's operating personnel and manufacturers' representatives, and with submission of operation and maintenance manuals in accordance with Section 01430, Operation and Maintenance Data.
2. Complete at least 14 days prior to beginning of facility startup.

E. Post-startup Training: If required in Specifications, furnish and coordinate training of Owner's operating personnel by respective manufacturer's representatives.

F. Taping of Training Sessions:

1. Furnish audio and color video taping of prestartup and post-startup instruction sessions, including manufacturers' representatives' hands-on equipment instruction and classroom sessions.
2. Use VHS format, suitable for playback on standard equipment available commercially in the United States.

3.05 SUPPLEMENT

A. The supplement listed below, following "End of Section," is part of this Specification.

1. Manufacturer's Certificate of Proper Installation.

**END OF SECTION**

## MANUFACTURER'S CERTIFICATE OF PROPER INSTALLATION

OWNER _____ EQPT SERIAL NO:_____

EQPT TAG NO:_____ EQPT/SYSTEM:_____

PROJECT NO:_____ SPEC. SECTION:_____

I hereby certify that the above-referenced equipment/system has been:

(Check Applicable)

- ☐ Installed in accordance with Manufacturer's recommendations.
- ☐ Inspected, checked, and adjusted.
- ☐ Serviced with proper initial lubricants.
- ☐ Electrical and mechanical connections meet quality and safety standards.
- ☐ All applicable safety equipment has been properly installed.
- ☐ Functional tests.
- ☐ System has been performance tested, and meets or exceeds specified performance requirements. (When complete system of one manufacturer)

Note: Attach any performance test documentation from manufacturer.

Comments:_____

_____

_____

_____

I, the undersigned Manufacturer's Representative, hereby certify that I am (i) a duly authorized representative of the manufacturer, (ii) empowered by the manufacturer to inspect, approve, and operate his equipment and (iii) authorized to make recommendations required to assure that the equipment furnished by the manufacturer is complete and operational, except as may be otherwise indicated herein. I further certify that all information contained herein is true and accurate.

Date:_____, 20___

Manufacturer:_____

By Manufacturer's Authorized Representative: _____
(Authorized Signature)

# SECTION 01645
# OWNER-FURNISHED PRODUCTS

## PART 1 GENERAL

### 1.01 OWNER-FURNISHED PRODUCTS

| Units | Owner-Furnished Equipment | Refurbishment and Modification |
|---|---|---|
| 2 | Air Compressor Package Systems (50M1651-2) | Remove and install as shown on the Drawings. |
| 1 | Air Dryer | Remove and install as shown on the Drawings. |
| 1 | Filter Press (50M1470) | Remove and install as shown on the Drawings. |
| 2 | Filter Press Feed Tanks (40T1431-2) | Remove and install as shown on the Drawings. |
| 1 | Filtrate Tank (50T1480) | Remove and install as shown on the Drawings. |
| 1 | Automatic Composite Sampler | Disconnect from the existing plant and install in the new tank farm. |
| 1 | Polymer Feed System (Including Support Skid) (50T1600, 50P1611, 50M1601, 40T1620, 50P1640) | 1. Existing polymer feed pump is a LMI Milton Roy Series C, part number C931-20HV. Add 8-pin connector extension cable, LMI part number 31396-10, to provide capability for pump to take a 4 to 20 mA SPEED input and a discrete RUN input.<br>2. Modify Polymer Panel 50LCP1601 to provide power ON and AUTO status signals to the PCS. |
| 1 | Product Tank (40T1400) and Platform | Surface prep and coating as defined in Section 09900, Painting and Protective Coatings. |
| 1 | Digester Tank (40T1420) | Add ultrasonic level indicating transmitter (LIT1421). |
| 1 | Filter Press/Digester Feed Pump (50P1460) | Move from existing plant to new location. |
| 1 | Digester/Skim Pump (50P1120) | Move from existing plant to new location. |
| 1 | Plant Water Storage Tank (50T1570) | 1. Disassemble all units components.<br>2. Reinstall all components in the new location. |
| 2 | Plant Water Pumps (50P1581-2) | 1. Disassemble all units components.<br>2. Reinstall all components in the new location. |

| Units | Owner-Furnished Equipment | Refurbishment and Modification |
|---|---|---|
| 1 | Control Power UPS (50UPS1701) PowerWare Model PW9170<br>Serial Number C66IN018KG0207456601-120AAAAAAP | Add output signal module to provide ON BATTERY and UPS FAIL output signals to the PCS. |
| 1 | Walnut Media Filter System | Install system and all its components in the location shown on the Drawings. Provide all utility and I&C connections required. |

A. Sequence modifications and refurbishments as specified in Section 01040, Coordination.

B. Refer to Drawings for mechanical, electrical, and instrumentation and control details on Owner-furnished equipment modifications and refurbishments.

C. Contractor shall relocate, modify and refurbish, and test all the Owner-furnished equipment specified in the table. The Contractor shall be responsible for all costs associated with the disassembly, relocation, modifications, reassembly, and testing of the equipment. All work shall be in accordance with the Drawings and Specifications.

D. Contractor to provide and install temporary a dry compressed air system and all associated piping, valves, and appurtenances to maintain existing plant operations during the relocation of the existing air compressor and dryer through completion of the plant Performance Demonstration Test.

1.02 INFORMATION FURNISHED BY OWNER

A. Available Shop Drawings related to Owner-furnished products will be made available for Contractor's use in performing the work under this section.

B. Available manufacturer's installation, operation, and maintenance instructions for Owner-furnished products will be made available.

1.03 SUBMITTALS

A. Action Submittals:

1. Shop Drawings:
   a. Show layout, location, and identification of materials provided by Contractor for installation of Owner-furnished products.

b. Include pipe, fittings, valves, specialties, hangers, supports, equipment, and required specialties.
c. Accurately show openings in floors, walls, and other parts of structure.
d. Provide electrical and instrumentation diagrams to indicate connecting and interconnecting electrical and control work.
e. Submit complete list of materials to be furnished, and include data necessary to allow Owner to determine their fitness for the work.

B. Informational Submittals:

1. Manufacturer's Certification of Proper Installation for Walnut Media Filter system.
2. Operation and Maintenance Manual for Walnut Media Filter System.

1.04 TRANSFER OF PRODUCTS

A. Owner-furnished equipment.

1.05 STORAGE AND MAINTENANCE

A. Store, protect, and maintain product to prevent damage until final acceptance of completed work. Damage to or loss of products after date of transfer to Contractor shall be repaired to original condition, or replaced with new identical products, at the discretion of Engineer.

B. Maintain complete inventory of all Owner-furnished products after their transfer to Contractor.

1.06 SCHEDULING AND SEQUENCING

A. Include sequencing constraints specified herein as part of Progress Schedule.

**PART 2 PRODUCTS (NOT USED)**

**PART 3 EXECUTION**

3.01 INSTALLATION

A. Decontaminate equipment after removal and prior to installation.

B. Install products in conformance with Owner-furnished product shop drawings and installation instructions.

C. Provide all interconnecting structures, equipment, piping, electrical and instrumentation work, finish painting, and appurtenances to achieve a complete and functional system.

D. Provide foundation pads for Owner-furnished products as shown. Verify exact dimensions and configuration of all pads, including penetrations, with Owner-furnished product shop drawings.

E. Anchor Bolts:

1. Where required, provide anchor bolts, fasteners, washers, and templates needed for installation of Owner-furnished equipment.
2. Size and locate anchor bolts in accordance with Owner-furnished product shop drawings and installation instructions.

F. Mechanical and electrical equipment shall be properly aligned, plumb and level, with no stresses on connecting piping or conduit.

G. Verify direction of motor rotation before starting equipment drives.

H. Verify operability and safety of electrical system needed to operate equipment. Check electrical system for continuity, phasing, grounding, and proper functions.

3.02 FIELD FINISHING

A. Products will be delivered with prime and finish coat(s) applied.

1. Touch up or repair damage to coatings resulting from storage, installation, testing, and startup.
2. If finish coats are damaged extensively after transfer, completely repaint.
3. Touch up, repair, or complete repainting shall match color of original paint, and shall be fully compatible with applied primers and finish.

3.03 PRODUCT PROTECTION

A. Immediately after installation, lubricate components in accordance with manufacturer's instructions.

B. Follow manufacturer's instructions for protection and maintenance during storage, after installation but prior to testing and startup, and after startup but prior to acceptance.

C. Furnish incidental supplies including lubricants, cleaning fluids, and similar products as needed for protecting and maintaining the Owner-furnished products.

3.04 TESTS AND INSPECTION

A. Perform tests and inspections of installed products in accordance with requirements shown herein, Section 01810, Equipment Testing and Facility Startup, and manufacturer's instructions.

**END OF SECTION**

# SECTION 01780
# CONTRACT CLOSEOUT

## PART 1 GENERAL

### 1.01 SUBMITTALS

A. Informational Submittals:

1. Submit prior to application for final payment.
   a. Record Documents.
   b. Special bonds, Special Guarantees, and Service Agreements.
   c. Consent of Surety to Final Payment.
   d. Releases or Waivers of Liens and Claims.
   e. Releases from Agreements.
   f. Final Application for Payment: Submit in accordance with procedures and requirements stated in Section 01025, Measurement and Payment.
   g. Extra Materials: As required by individual Specification sections.

### 1.02 RECORD DOCUMENTS

A. Quality Assurance:

1. Furnish qualified and experienced person, whose duty and responsibility shall be to maintain record documents.
2. Accuracy of Records:
   a. Coordinate changes within record documents, making legible and accurate entries on each sheet of Drawings and other documents where such entry is required to show change.
   b. Purpose of Project record documents is to document factual information regarding aspects of the Work, both concealed and visible, to enable future modification of the Work to proceed without lengthy and expensive Site measurement, investigation, and examination.
3. Make entries within 24 hours after receipt of information that a change in the Work has occurred.
4. Prior to submitting each request for progress payment, request Engineer's review and approval of current status of record documents. Failure to properly maintain, update, and submit record documents may result in a deferral by Engineer to recommend whole or any part of Contractor's Application for Payment, either partial or final.

1.03 RELEASES FROM AGREEMENTS

A. Furnish Owner written releases from property owners or public agencies where side agreements or special easements have been made, or where Contractor's operations have not been kept within the Owner's construction right-of-way.

B. In the event Contractor is unable to secure written releases:

1. Inform Owner of the reasons.
2. Owner or its representatives will examine the Site, and Owner will direct Contractor to complete the Work that may be necessary to satisfy terms of the side agreement or special easement.
3. Should Contractor refuse to perform this Work, Owner reserves right to have it done by separate contract and deduct cost of same from Contract Price, or require Contractor to furnish a satisfactory bond in a sum to cover legal Claims for damages.
4. When Owner is satisfied that the Work has been completed in agreement with Contract Documents and terms of side agreement or special easement, right is reserved to waive requirement for written release if: (i) Contractor's failure to obtain such statement is due to grantor's refusal to sign, and this refusal is not based upon any legitimate Claims that Contractor has failed to fulfill terms of side agreement or special easement, or (ii) Contractor is unable to contact or has had undue hardship in contacting grantor.

**PART 2 PRODUCTS (NOT USED)**

**PART 3 EXECUTION**

3.01 MAINTENANCE OF RECORD DOCUMENTS

A. General:

1. Promptly following commencement of Contract Times, secure from Engineer at no cost to Contractor, one complete set of Contract Documents. Drawings will be full size.
2. Label or stamp each record document with title, "RECORD DOCUMENTS," in neat large printed letters.
3. Record information concurrently with construction progress and within 24 hours after receipt of information that change has occurred. Do not cover or conceal Work until required information is recorded.

B. Preservation:

1. Maintain documents in a clean, dry, legible condition and in good order. Do not use record documents for construction purposes.
2. Make documents and Samples available at all times for observation by Engineer.

C. Making Entries on Drawings:

1. Using an erasable colored pencil (not ink or indelible pencil), clearly describe change by graphic line and note as required.
   a. Color Coding:
      1) Green when showing information deleted from Drawings.
      2) Red when showing information added to Drawings.
      3) Blue and circled in blue to show notes.
2. Date entries.
3. Call attention to entry by "cloud" drawn around area or areas affected.
4. Legibly mark to record actual changes made during construction, including, but not limited to:
   a. Depths of various elements of foundation in relation to finished first floor data if not shown or where depth differs from that shown.
   b. Horizontal and vertical locations of existing and new Underground Facilities and appurtenances, and other underground structures, equipment, or Work. Reference to at least two measurements to permanent surface improvements.
   c. Location of internal utilities and appurtenances concealed in the construction referenced to visible and accessible features of the structure.
   d. Locate existing facilities, piping, equipment, and items critical to the interface between existing physical conditions or construction and new construction.
   e. Changes made by Addenda and Field Orders, Work Change Directive, Change Order, and Engineer's written interpretation and clarification using consistent symbols for each and showing appropriate document tracking number.
5. Dimensions on Schematic Layouts: Show on record drawings, by dimension, the centerline of each run of items such as are described in previous subparagraph above.
   a. Clearly identify the item by accurate note such as "cast iron drain," "galv. water," and the like.
   b. Show, by symbol or note, vertical location of item ("under slab," "in ceiling plenum," "exposed," and the like).

c. Make identification so descriptive that it may be related reliably to Specifications.

3.02 FINAL CLEANING

A. At completion of the Work or of a part thereof and immediately prior to Contractor's request for certificate of Completion of Startup; or if no certificate is issued, immediately prior to Contractor's notice of completion, clean entire Site or parts thereof, as applicable.

1. Leave the Work and adjacent areas affected in a cleaned condition satisfactory to Owner.
2. Remove grease, dirt, dust, paint or plaster splatter, stains, labels, fingerprints, and other foreign materials from exposed surfaces.
3. Repair, patch, and touch up marred surfaces to specified finish and match adjacent surfaces.
4. Clean all windows.
5. Clean and wax wood, vinyl, or painted floors.
6. Broom clean exterior paved driveways and parking areas.
7. Hose clean sidewalks, loading areas, and others contiguous with principal structures.
8. Rake clean all other surfaces.
9. Remove snow and ice from access to buildings.
10. Replace air-handling filters and clean ducts, blowers, and coils of ventilation units operated during construction.
11. Leave water courses, gutters, and ditches open and clean.

B. Use only cleaning materials recommended by manufacturer of surfaces to be cleaned.

**END OF SECTION**

# SECTION 01810
# EQUIPMENT TESTING AND FACILITY STARTUP

## PART 1 GENERAL

### 1.01 DEFINITIONS

A. Facility: Entire Project, or an agreed-upon portion, including all of its unit processes.

B. Functional Test: Test or tests in presence of Engineer and Owner to demonstrate that installed equipment meets manufacturer's installation, calibration, and adjustment requirements and other requirements as specified. This includes Section 13400, Process Instrumentation and Control Systems (PICS), Functional Tests.

C. Performance Test: Test or tests performed after any required functional test in presence of Engineer and Owner to demonstrate and confirm individual equipment meets performance requirements specified in individual sections. This includes Section 13400, Process Instrumentation and Control Systems (PICS), Performance Tests.

D. Facility Performance Demonstration:

1. A demonstration, conducted by Contractor, with assistance of Owner, to demonstrate and document the performance of the entire operating facility, both manually and automatically (if required), based on criteria developed in conjunction with Owner and as accepted by Engineer.
2. Such demonstration is for the purposes of (i) verifying to Owner entire facility performs as a whole, and (ii) documenting performance characteristics of completed facility for Owner's records. Neither the demonstration nor the evaluation is intended in any way to make performance of a unit process or entire facility the responsibility of Contractor, unless such performance is otherwise specified.

E. Date of Completion of Startup: Completion of facility performance demonstration.

### 1.02 SUBMITTALS

A. Informational Submittals:

1. Facility Startup and Performance Demonstration Plan.

2. Functional and performance test results.
3. Completed Unit Process Startup Form for each unit process.
4. Completed Facility Performance Demonstration/Certification Form.

1.03 FACILITY STARTUP AND PERFORMANCE DEMONSTRATION PLAN

A. Develop a written plan, in conjunction with Owner's operations personnel; to include the following:

1. Step-by-step instructions for startup of each unit process and the complete facility.
2. Unit Process Startup Form (sample attached), to minimally include the following:
   a. Description of the unit process, including equipment numbers/nomenclature of each item of equipment and all included devices.
   b. Detailed procedure for startup of the unit process, including valves to be opened/closed, order of equipment startup, etc.
   c. Startup requirements for each unit process, including water, power, chemicals, etc.
   d. Space for evaluation comments.
3. Facility Performance Demonstration/Certification Form (sample attached), to minimally include the following:
   a. Description of unit processes included in the facility startup.
   b. Sequence of unit process startup to achieve facility startup.
   c. Description of computerized operations, if any, included in the facility.
   d. Contractor certification facility is capable of performing its intended function(s), including fully automatic operation.
   e. Signature spaces for Contractor and Engineer.

**PART 2 PRODUCTS (NOT USED)**

**PART 3 EXECUTION**

3.01 GENERAL

A. Facility Startup Meetings: Schedule, in accordance with requirements of Section 01200, Project Meetings, to discuss test schedule, test methods, materials, chemicals and liquids required, facilities operations interface and testing, and Owner involvement.

B. Contractor's Testing and Startup Representative:

1. Designate and furnish one or more personnel to coordinate and expedite testing and facility startup.
2. Representative(s) shall be present during startup meetings and shall be available at all times during testing and startup.

C. Provide temporary valves, gauges, piping, test equipment and other materials and equipment required for testing and startup.

D. Provide Subcontractor and equipment manufacturers' staff adequate to prevent delays. Schedule ongoing work so as not to interfere with or delay testing and startup.

E. Owner will:

1. Provide water, power, chemicals, and other items as required for startup, unless otherwise indicated.
2. Operate process units and facility with support of Contractor.
3. Provide labor and materials as required for laboratory analyses.

## 3.02 EQUIPMENT TESTING

A. Preparation:

1. Complete installation before testing.
2. Furnish qualified manufacturers' representatives, when required by individual Specification sections.
3. Obtain and submit from equipment manufacturer's representative Manufacturer's Certificate of Proper Installation Form, in accordance with Section 01640, Manufacturers' Services, when required by individual Specification sections.
4. Equipment Test Report Form: Provide written test report for each item of equipment to be tested, to include the minimum information:
   a. Owner/Project Name.
   b. Equipment or item tested.
   c. Date and time of test.
   d. Type of test performed (Functional or Performance).
   e. Test method.
   f. Test conditions.
   g. Test results.
   h. Signature spaces for Contractor and Engineer as witness.

5. Cleaning and Checking: Prior to beginning functional testing:
   a. Calibrate testing equipment in accordance with manufacturer's instructions.
   b. Inspect and clean equipment, devices, connected piping, and structures to ensure they are free of foreign material.
   c. Lubricate equipment in accordance with manufacturer's instructions.
   d. Turn rotating equipment by hand when possible to confirm that equipment is not bound.
   e. Open and close valves by hand and operate other devices to check for binding, interference, or improper functioning.
   f. Check power supply to electric-powered equipment for correct voltage.
   g. Adjust clearances and torque.
   h. Test piping for leaks.
6. Ready-to-test determination will be by Engineer based at least on the following:
   a. Acceptable Operation and Maintenance Data.
   b. Notification by Contractor of equipment readiness for testing.
   c. Receipt of Manufacturer's Certificate of Proper Installation, if so specified.
   d. Adequate completion of work adjacent to, or interfacing with, equipment to be tested, including items to be furnished by Owner.
   e. Availability and acceptability of manufacturer's representative, when specified, to assist in testing of respective equipment.
   f. Satisfactory fulfillment of other specified manufacturer's responsibilities.
   g. Equipment and electrical tagging complete.
   h. Delivery of all spare parts and special tools.
   i. Acceptable testing plan.
   j. Treatment Plant PICS complete.

B. Contractor shall coordinate with Engineer and PICS Integrator on the startup of equipment including PICS as specified in Section 13400, Process Instrumentation and Control Systems (PICS). Coordination meetings shall be conducted in accordance with Section 01200, Project Meetings.

C. Functional Testing:

1. Conduct as specified in individual Specification sections.
2. Notify Owner and Engineer in writing at least 10 days prior to scheduled date of testing.
3. Prepare Equipment Test Report summarizing test method and results.

4. When, in Engineer's opinion, equipment meets functional requirements specified, such equipment will be accepted for purposes of advancing to performance testing phase, if so required by individual Specification sections. Such acceptance will be evidenced by Engineer/Owner's signature as witness on Equipment Test Report.
5. Functional testing shall be conducted with either W1 or W2 water if not specified in individual Specification sections.

D. Performance Testing:

1. Conduct as specified in individual Specification sections.
2. Notify Engineer and Owner in writing at least 10 days prior to scheduled date of test.
3. Performance testing shall not commence until equipment has been accepted by Engineer as having satisfied functional test requirements specified.
4. Type of fluid, gas, or solid for testing shall be as specified. Testing shall be conducted on process fluid for which operations are intended if not specified in individual Specification sections.
5. Unless otherwise indicated, furnish labor, materials, and supplies for conducting the test and taking samples and performance measurements.
6. Prepare Equipment Test Report summarizing test method and results.
7. When, in Engineer's opinion, equipment meets performance requirements specified, such equipment will be accepted as to conforming to Contract requirements. Such acceptance will be evidenced by Engineer's signature on Equipment Test Report.
8. Follow approved testing plan and detailed procedures specified.
9. Owner-Furnished Equipment Test: Manufacturer furnishing equipment will perform performance testing of this equipment. Contractor shall assist by providing access to equipment, interfacing materials, and adjustments to installation as required to achieve a satisfactory performance test. Contractor may perform performance testing of this equipment after approval from the Owner or Owner's Representative.

E. Preparation and Functional Testing Phases corresponds to the ORT-1 phase of PICS testing as described in Section 13400, Process Instrumentation and Control Systems (PICS). Performance Testing corresponds to the ORT-2 phase of PICS testing as described in Section 13400, Process Instrumentation and Control Systems (PICS). Contractor is responsible to coordinate with Engineer, PICS Integrator, and other applicable subcontractors throughout all testing phases including PICS testing.

## 3.03 STARTUP OF UNIT PROCESSES

A. Prior to unit process startup, equipment within unit process shall be accepted by Engineer as having met functional and performance testing requirements specified.

B. Make adjustments, repairs, and corrections necessary to complete unit process startup.

C. Startup shall be considered complete when, in opinion of Engineer, unit process has operated in manner intended for 10 continuous days without significant interruption. This period is in addition to functional or performance test periods specified elsewhere.

D. Significant Interruption: May include any of the following events:

1. Failure of Contractor to provide and maintain qualified onsite startup personnel as scheduled.
2. Failure to meet specified functional operation for more than 2 consecutive hours.
3. Failure of any critical equipment or unit process that is not satisfactorily corrected within 5 hours after failure.
4. Failure of any noncritical equipment or unit process that is not satisfactorily corrected within 8 hours after failure.
5. As determined by Engineer.

E. A significant interruption will require startup then in progress to be stopped. After corrections are made, startup test period to start from beginning again.

## 3.04 FACILITY PERFORMANCE DEMONSTRATION

A. When, in the opinion of Engineer, startup of all unit processes has been achieved, sequence each unit process to the point that facility is operational.

B. Demonstrate proper operation of required interfaces within and between individual unit processes.

C. After facility is operating, complete performance testing of equipment and systems not previously tested.

D. Document, as defined in Facility Startup and Performance Demonstration Plan, the performance of the facility including its computer system, until all unit processes are operable and under control of computer system.

E. Certify, on the Facility Performance Demonstration/Certification Form, that facility is capable of performing its intended function(s), including fully automatic operation.

F. Facility performance demonstration shall be considered complete after 5 days of continuous operation without significant interruptions as specified in Article Startup of Unit Processes. If the 10 continuous days of startup of unit processes includes demonstration of proper operation of required interfaces within and between all unit processes, the Engineer will consider facility performance demonstration and startup complete.

3.05 SUPPLEMENTS

A. Supplements listed below, following "End of Section," are a part of this Specification:

1. Unit Process Startup Form.
2. Facility Performance Demonstration/Certification Form.

**END OF SECTION**

## UNIT PROCESS STARTUP FORM

**OWNER:**_____ **PROJECT:**_____

**Unit Process Description: (Include description and equipment number of all equipment and devices):**

_____

_____

_____

_____

**Startup Procedure (Describe procedure for sequential startup and evaluation, including valves to be opened/closed, order of equipment startup, etc.):**

_____

_____

_____

_____

_____

**Startup Requirements (Water, power, chemicals, etc.):**_____

_____

_____

**Evaluation Comments:**_____

_____

_____

_____

## FACILITY PERFORMANCE DEMONSTRATION/CERTIFICATION FORM

**OWNER:**_____ **PROJECT:**_____

**Unit Processes Description (List unit processes involved in facility startup):**

_____

_____

_____

_____

**Unit Processes Startup Sequence (Describe sequence for startup, including computerized operations, if any):**

_____

_____

_____

_____

_____

**Contractor Certification that Facility is capable of performing its intended function(s), including fully automatic operation:**

**Contractor:** _____ **Date:** _____, 20____

**Engineer:** _____ **Date:** _____, 20____
**(Authorized Signature)**

# SECTION 02080
# FIRE HYDRANTS

## PART 1 GENERAL

### 1.01 REFERENCES

A. The following is a list of standards which may be referenced in this section:

1. American Water Works Association (AWWA):
   a. C502, Dry-Barrel Fire Hydrants.
   b. C600, Standard for Installation of Ductile-Iron Water Mains and Their Appurtenances.
2. ASTM International (ASTM): C94, Standard Specification for Ready-Mixed Concrete.

### 1.02 SUBMITTALS

A. Action Submittals: Catalog cuts of system components.

B. Informational Submittal: Certificate of Compliance: Upon completion of the system installation, verify all fire department hose connections, and check all fire safety devices to ensure their readiness for emergency connection and operation.

## PART 2 PRODUCTS

### 2.01 LOW PRESSURE HYDRANTS

A. Hydrant:

1. Break flange or safety top type.
2. Nominal 5-1/4-inch main valve opening with 6-inch bottom connections.
3. Conform to AWWA C502.
4. Two 2-1/2-inch hose nozzles.
5. One 4-inch Storz pumper nozzle.
6. Operating Nuts: 1-1/2-inch National Standard pentagon nut.
7. Mechanical joint inlet connection.
8. Yellow aboveground line.
9. Manufacturer and Product: Mueller; A-24012 or A-24015.

B. Main Valve:

1. Depth of Bury: 3-1/2 feet.
2. Equip with O-ring seals.
3. Valve opens on counterclockwise rotation.

2.02 PRECAST CONCRETE PIER BLOCK

A. Nominal dimensions of 8-inch thickness by 16-inch square base.

B. Compressive Strength: 3,000 psi at 28 days.

2.03 GRAVEL FOR DRAINAGE

A. Washed 3/4-inch crushed rock or graded river gravel. Free of organic matter, sand, loam, clay, and other small particles that will restrict water flow through gravel.

2.04 FOUNDATION STABILIZATION MATERIAL

A. Furnish when existing trench material or imported pipe base material will not support soft or flooded spots in excavated trench.

B. Maximum 3-inch hard rock free from excessive clay material, but enough fines to bind larger fragments.

2.05 CONCRETE FOR THRUST BLOCKING

A. Ready-mix meeting ASTM C94, Alternative 2.

B. Compressive Strength: 2,500 psi at 28 days.

C. Aggregate Size: 1-1/2 inches.

D. Slump: 2 to 4 inches.

2.06 THRUST TIES

A. 3/4-inch diameter steel rods.

B. Duc-Lugs Manufacturer: The Stellar Corp., Columbus, OH.

## PART 3 EXECUTION

### 3.01 GENERAL

A. Install hydrants in accordance with Sections 3.7 and 3.8 of AWWA C600, unless specified otherwise.

### 3.02 EXCAVATION

A. Excavate to subgrade. Fill over excavated areas with foundation stabilization material. Tamp to provide firm foundation.

### 3.03 BASE BLOCK

A. Place on firm, level subgrade to ensure uniform support.

### 3.04 INSTALLATION OF HYDRANTS

A. Locate hydrants to provide accessibility and to minimize potential damage from vehicles.

1. Relocate improperly set hydrants.
2. Hydrant Located Behind Curbs: Set barrel so pumper nozzle or hose nozzle caps are a minimum of 18 inches from gutter face of curb.
3. Hydrant Located in Space Between Curb and Sidewalk: Not less than 8 inches, clear from sidewalks.
4. Hydrant Located Between Sidewalk and Property Line: Minimum clearance 8 inches from sidewalk.
5. Set hydrants so safety flange is a minimum of 2 inches above finished ground or sidewalk level.

B. Place hydrant on base block carefully to prevent the base block from breaking.

C. Joints shall conform to Section 3.4 of AWWA C600 when cast or ductile iron pipe is used.

D. Maintain hydrant in a plumb position during subsequent Work.

### 3.05 GRAVEL FOR DRAINAGE

A. Place gravel around base block and hydrant bottom in accordance with Section 3.7 of AWWA C600.

### 3.06 CONCRETE THRUST BLOCKING

A. Place blocking after hydrant is set in final position and join to pipe.

B. Concrete thrust block shall have a minimum of 4 square feet of bearing area against undisturbed earth.

3.07 THRUST TIES

A. Install thrust ties in lieu of concrete thrust blocking when ground surface behind hydrant is less than 2 feet above top of hydrant base.

**END OF SECTION**

# SECTION 02200
# SITE PREPARATION

## PART 1 GENERAL

### 1.01 DEFINITIONS

A. Interfering or Objectionable Material: Trash, rubbish, and junk; vegetation and other organic matter, whether alive, dead, or decaying; topsoil.

B. Clearing: Removal of interfering or objectionable material lying on or protruding above ground surface.

C. Grubbing: Removal of vegetation and other organic matter including stumps, buried logs, and roots greater than 2 inches caliper to a depth of 6 inches below subgrade.

D. Stripping: Removal of topsoil remaining after applicable scalping is completed.

E. Project Limits: Areas, as shown or specified, within which Work is to be performed.

### 1.02 SUBMITTALS

A. Action Submittals: Drawings clearly showing clearing, grubbing, and stripping limits.

### 1.03 QUALITY ASSURANCE

A. Obtain Engineer's approval of staked clearing, grubbing, and stripping limits, prior to commencing clearing, grubbing, and stripping.

### 1.04 SCHEDULING AND SEQUENCING

A. Prepare Site only after adequate erosion and sediment controls are in place. Limit areas exposed uncontrolled to erosion during installation of temporary erosion and sediment controls to maximum of 0.1 acre.

## PART 2 PRODUCTS (NOT USED)

## PART 3 EXECUTION

3.01 GENERAL

A. Clear, grub, and strip areas actually needed for waste disposal, borrow, or Site improvements within limits shown or specified.

B. Do not injure or deface vegetation that is not designated for removal.

3.02 LIMITS

A. As follows, but not to extend beyond Project limits.

1. Excavation Excluding Trenches: 5 feet beyond top of cut slopes.
2. Trench Excavation: 4 feet from trench centerline, regardless of actual trench width.
3. Fill:
   a. Clearing and Grubbing: 5 feet beyond toe of permanent fill.
   b. Stripping: 2 feet beyond toe of permanent fill.
4. Waste Disposal:
   a. Clearing: 5 feet beyond perimeter.
   b. Stripping: Not required.
   c. Grubbing: Around perimeter as necessary for neat finished appearance.
5. Structures: 15 feet outside of new structures.
6. Roadways: Clearing, grubbing, and stripping 15 feet from centerline.
7. Other Areas: As shown.

B. Remove rubbish, trash, and junk from entire area within Project limits.

3.03 CLEARING

A. Clear areas within limits shown or specified.

B. Fell trees so that they fall away from facilities and vegetation not designated for removal.

C. Cut stumps not designated for grubbing flush with ground surface.

D. Cut off shrubs, brush, weeds, and grasses to within 2 inches of ground surface.

3.04 GRUBBING

A. Grub areas within limits shown or specified.

3.05 STRIPPING

A. Strip areas within limits to minimum depths shown or specified. Do not remove subsoil with topsoil.

3.06 TREE REMOVAL OUTSIDE CLEARING LIMITS

A. Remove Within Project Limits:

1. Dead, dying, leaning, or otherwise unsound trees that may strike and damage Project facilities in falling.
2. Trees designated by Engineer.

B. Cut stumps off flush with ground, remove debris, and if disturbed, restore surrounding area to its original condition.

3.07 SALVAGE

A. Saleable log timber may be sold to Contractor's benefit. Promptly remove from Project Site.

3.08 DISPOSAL

A. Clearing and Grubbing Debris: Dispose of debris onsite as directed by Owner's representative.

B. Strippings: As specified for clearing and grubbing debris.

**END OF SECTION**

# SECTION 02220
# DEMOLITION

## PART 1 GENERAL

### 1.01 SECTION INCLUDES

A. Portions of buildings and other areas scheduled for selective demolition, partial demolition, and remodeling work are as shown.

### 1.02 SUBMITTALS

A. Informational Submittals:

1. Methods of demolition and equipment proposed to demolish each structure.
2. Copies of any authorizations and permits required to perform the Work.

### 1.03 REMOVAL AND STORAGE OF EQUIPMENT

A. Removal and storage of existing equipment in the buildings to be performed by others under a separate Contract.

B. Demolition of existing piping, utilities, and any other accessories to be performed by others under a separate Contract unless otherwise noted in Drawings or Specifications.

C. Contractor shall coordinate demolition activities by others with Owner.

## PART 2 PRODUCTS (NOT USED)

## PART 3 EXECUTION

### 3.01 PREPARATION

A. Utilities:

1. Notify Owner or appropriate utilities to turn off affected services before starting demolition or alterations.
2. Remove utility lines exposed by demolition excavation.
3. Remove electric, sanitary, and storm drainage adjacent to buildings to be demolished.
4. Excavate utility lines serving buildings to be demolished and provide a permanent leak-proof closure for water lines.

5. Plug sewer lines at locations shown or at limits of excavation if not shown with concrete length of plug, 5 feet minimum to prevent groundwater infiltrating sewer systems.

3.02 DEMOLITION

A. Drawings define minimum portion of structures to be removed. Unless otherwise shown, rough cuts or breaks may be made exceeding limits of demolition shown.

B. Remove piping from areas to be backfilled. Pipe, valves, and fittings adjacent to those to be removed may also be removed as salvage.

C. Cut off concealed or embedded conduit, boxes, or other materials a minimum of 3/4 inch below final finished surface.

3.03 DISPOSAL

A. Dispose of debris and other nonsalvaged materials offsite in licensed landfills.

3.04 BACKFILLING

A. Backfill Material and Compaction:

1. Conform to Section 02316, Fill and Backfill.
2. Do not use demolition debris as backfill material.

3.05 SALVAGE

A. Materials, including piping within the limits of demolition, unless otherwise specified, will become the property of Contractor.

**END OF SECTION**

# SECTION 02260
# EXCAVATION SUPPORT AND PROTECTION

## PART 1 GENERAL

### 1.01 SUBMITTALS

A. Informational Submittals:

1. Excavation support plan.
2. Movement monitoring plan.
3. Movement measurement and data and reduced results indicating movement trends.

### 1.02 QUALITY ASSURANCE

A. Provide surveys to monitor movements of critical facilities.

## PART 2 PRODUCTS (NOT USED)

## PART 3 EXECUTION

### 3.01 GENERAL

A. Design, provide, and maintain shoring, sheeting, and bracing as necessary to support the sides of excavations and to prevent detrimental settlement and lateral movement of existing facilities, adjacent property, and completed the Work.

### 3.02 SUMP EXCAVATION SUPPORT PLANS

A. Prepare excavation support plans addressing following topics:

1. Details of shoring, bracing, sloping, or other provisions for worker protection from hazards of caving ground.
2. Design assumptions and calculations. A professional engineer licensed in the State of Washington and experienced in the design of similar support systems shall design and seal all Contractor-designed excavation support.
3. Methods and sequencing of installing excavation support.
4. Proposed locations of stockpiled excavated material.
5. Minimum lateral distance from the crest of slopes for vehicles and stockpiled excavated materials.
6. Anticipated difficulties and proposed resolutions.

3.03 REMOVAL OF EXCAVATION SUPPORT

A. Remove excavation support in a manner that will maintain support as excavation is backfilled.

B. Do not begin to remove excavation support until support can be removed without damage to existing facilities, completed Work, or adjacent property.

C. Remove excavation support in a manner that does not leave voids in the backfill.

3.04 TRENCHES

A. Provide trench excavations exceeding 4 feet in depth with adequate safety systems meeting the requirements of the Washington Industrial Safety and Health Act, Chapter 49.17 RCW.

**END OF SECTION**

# SECTION 02315
# EXCAVATION

## PART 1 GENERAL

### 1.01 SUBMITTALS

A. Informational Submittals:

1. Excavation Plan, Detailing:
   a. Methods and sequencing of excavation.
   b. Proposed locations of stockpiled excavated material.
   c. Proposed onsite and offsite spoil disposal sites.

### 1.02 QUALITY ASSURANCE

A. Provide adequate survey control to avoid unauthorized overexcavation.

### 1.03 WEATHER LIMITATIONS

A. Material excavated when frozen or when air temperature is less than 32 degrees F shall not be used as fill or backfill until material completely thaws.

B. Material excavated during inclement weather shall not be used as fill or backfill until after material drains and dries sufficiently for proper compaction.

### 1.04 SEQUENCING AND SCHEDULING

A. Demolition: Complete applicable Work specified on the Drawings, prior to excavating.

B. Clearing, Grubbing, and Stripping: Complete applicable Work specified in Section 02200, Site Preparation, prior to excavating.

C. Excavation Support: Install and maintain, as specified in Section 02260, Excavation Support and Protection, as necessary to support sides of excavations and prevent detrimental settlement and lateral movement of existing facilities, adjacent property, and completed Work.

## PART 2 PRODUCTS (NOT USED)

## PART 3 EXECUTION

### 3.01 GENERAL

A. Excavate to lines, grades, and dimensions shown and as necessary to accomplish Work. Excavate to within tolerance of plus or minus 0.1 foot, except where dimensions or grades are shown or specified as maximum or minimum. Allow for forms, working space, granular base, topsoil, and similar items, wherever applicable. Trim to neat lines where concrete is to be deposited against earth.

B. Where the Engineer determines the soil is contaminated, the Contractor shall overexcavate and replace with backfill as specified in Section 02316, Fill and Backfill. The Engineer shall be the sole judge of the limits of the contamination and over excavation. At a minimum, the overexcavation of contaminated soils shall continue to 10 feet, measured horizontally, from the Work.

C. Do not overexcavate without written authorization of Engineer. Excavation shall not penetrate the underlying aquifer. Excavation shall stop above the bottom of the aquitard (glacial till).

D. Remove or protect obstructions as shown and as specified in the Drawings and Specifications.

E. Use of explosives shall not be allowed.

F. Remove and control water during periods when necessary to properly accomplish the work.

### 3.02 UNCLASSIFIED EXCAVATION

A. Excavation is unclassified. Complete all excavation regardless of the type, nature, or condition of the materials encountered.

### 3.03 TRENCH WIDTH

A. Minimum Width of Trenches:

1. Single Pipes, Conduits, Direct-Buried Cables, and Duct Banks:
   a. Less than 4-inch Outside Diameter or Width: 18 inches.
   b. Greater than 4-inch Outside Diameter or Width: 24 inches greater than outside diameter or width of pipe, conduit, direct-buried cable, or duct bank.

2. Multiple Pipes, Conduits, Cables, or Duct Banks in Single Trench: 24 inches greater than aggregate width of pipes, conduits, cables, duct banks, plus space between.
3. Increase trench widths by thicknesses of sheeting.

B. Maximum Trench Width: Unlimited, unless otherwise shown or specified, or unless excess width will cause damage to existing facilities, adjacent property, or completed Work.

3.04 PIPE BEDDING GROOVES FOR NONPERFORATED DRAIN LINES

A. Semicircular, trapezoidal, or 90-degree-V.

B. Excavated or plowed into trench bottom. Forming groove by compaction will not be acceptable.

3.05 EMBANKMENT AND CUT SLOPES

A. Shape, trim, and finish cut slopes to conform with lines, grades, and cross-sections shown, with proper allowance for topsoil or slope protection, where shown.

B. Remove stones and rock that exceed 3-inch diameter and that are loose and may roll down slope. Remove exposed roots from cut slopes.

C. Round tops of cut slopes in soil to not less than a 6-foot radius, provided such rounding does not extend offsite or outside easements and rights-of-way, or adversely impacts existing facilities, adjacent property, or completed Work.

3.06 STOCKPILING EXCAVATED MATERIAL

A. Stockpile excavated material that is suitable for use as fill or backfill until material is needed. Engineer shall be sole judge of suitability of excavated material for use as fill or backfill.

B. Post signs indicating proposed use of material stockpiled. Post signs that are readable from all directions of approach to each stockpile. Signs should be clearly worded and readable by equipment operators from their normal seated position.

C. Confine stockpiles to within easements, rights-of-way, and approved work areas. Do not obstruct roads or streets.

D. Do not stockpile excavated material adjacent to trenches and other excavations, unless excavation side slopes and excavation support systems are designed, constructed, and maintained for stockpile loads.

E. Do not stockpile excavated materials near or over existing facilities, adjacent property, or completed Work, if weight of stockpiled material could induce excessive settlement.

3.07 DISPOSAL OF SPOIL

A. Dispose of excavated materials, which are unsuitable or not needed for fill or backfill, in designated spoil disposal area onsite. Disposal area shall be determined by Engineer and shall be within 1,000 feet of the Work. Spoil shall be placed and compacted as fill as outlined in Section 02316, Fill and Backfill.

B. Dispose of debris resulting from removal of underground facilities as specified in the Drawings, for demolition.

C. Dispose of debris resulting from removal of organic matter, trash, refuse, and junk as specified in Section 02200, Site Preparation, for clearing and grubbing debris.

3.08 SURFACE WATER CONTROL

A. Provide surface water controls as required to prevent surface water from entering excavations. Remove surface water controls when no longer needed.

3.09 GROUNDWATER CONTROL

A. Provide, operate, and maintain groundwater control systems of sufficient size and capacity to permit excavation and subsequent construction in dry and to lower groundwater level a minimum of 2 feet below the lowest point of excavation. Continuously maintain excavations free of water, regardless of source, and until backfilled to final grade.

B. Disposal of water will be onsite at a maximum of 500 feet north of the existing boiler building. Discharge water as required by Engineer and in a manner that will not cause erosion or flooding, or otherwise damage existing facilities, completed Work, or adjacent property.

C. Remove solids from groundwater prior to discharge as approved by Engineer.

**END OF SECTION**

# SECTION 02316
# FILL AND BACKFILL

## PART 1 GENERAL

### 1.01 REFERENCES

A. The following is a list of standards which may be referenced in this section:

1. ASTM International (ASTM):
   a. C117, Standard Test Method for Materials Finer Than 75-Micrometers (No. 200) Sieve in Mineral Aggregates by Washing.
   b. C136, Standard Method for Sieve Analysis of Fine and Coarse Aggregates.
   c. D75, Standard Practice for Sampling Aggregates.
   d. D698, Standard Test Methods for Laboratory Compaction Characteristics of Soil Using Standard Effort (12,400 ft-lbf/ft$^3$ (600 kN-m/m$^3$)).
   e. D1556, Standard Test Method for Density and Unit Weight of Soil in Place by the Sand-Cone Method.
   f. D1557, Test Method for Laboratory Compaction Characteristics of Soil Using Modified Effort (56,000 ft-lbf/ft$^3$ (2,700 kN-m/m$^3$)).
   g. D2922, Standard Test Methods for Density of Soil and Soil-Aggregate in Place by Nuclear Methods (Shallow Depth).
   h. D4253, Standard Test Methods for Maximum Index Density and Unit Weight of Soils Using a Vibratory Table.
   i. D4254, Standard Test Method for Minimum Index Density and Unit Weight of Soils and Calculation of Relative Density.

### 1.02 DEFINITIONS

A. Relative Compaction:

1. Ratio, in percent, of as-compacted field dry density to laboratory maximum dry density as determined in accordance with ASTM D1557.
2. Apply corrections for oversize material to either as-compacted field dry density or maximum dry density, as determined by Engineer.

B. Optimum Moisture Content:

1. Determined in accordance with ASTM Standard specified to determine maximum dry density for relative compaction.
2. Determine field moisture content on basis of fraction passing 3/4-inch sieve.

C. Relative Density: Calculated in accordance with ASTM D4254 based on maximum index density determined in accordance with ASTM D4253 and minimum index density determined in accordance with ASTM D4254.

D. Prepared Ground Surface: Ground surface after completion of required demolition, clearing and grubbing, scalping of sod, stripping of topsoil, excavation to grade, and subgrade preparation.

E. Completed Course: A course or layer that is ready for next layer or next phase of Work.

F. Lift: Loose (uncompacted) layer of material.

G. Geosynthetics: Geotextiles, geogrids, or geomembranes.

H. Well-Graded:

1. A mixture of particle sizes with no specific concentration or lack thereof of one or more sizes.
2. Does not define numerical value that must be placed on coefficient of uniformity, coefficient of curvature, or other specific grain size distribution parameters.
3. Used to define material type that, when compacted, produces a strong and relatively incompressible soil mass free from detrimental voids.

I. Influence Area: Area within planes sloped downward and outward at 60-degree angle from horizontal measured from:

1. 1 foot outside outermost edge at base of foundations or slabs.
2. 1 foot outside outermost edge at surface of roadways or shoulder.
3. 0.5 foot outside exterior at spring line of pipes or culverts.

J. Borrow Material: Material from required excavations or from designated borrow areas on or near Site.

K. Selected Backfill Material: Materials available onsite that Engineer determines to be suitable for specific use.

L. Imported Material: Materials obtained from sources offsite, suitable for specified use.

M. Structural Fill: Fill materials as required under structures, pavements, and other facilities.

N. Embankment Material: Fill materials required to raise existing grade in areas other than under structures.

O. Standard Specifications: When referenced in this section, shall mean the 2004 edition of the Washington State Department of Transportation Standard Specifications for Road, Bridge, and Municipal Construction.

1.03 SUBMITTALS

A. Informational Submittals:

1. Manufacturer's data sheets for compaction equipment.
2. Certified test results from independent testing agency.

1.04 QUALITY ASSURANCE

A. Notify Engineer when:

1. Structure or tank is ready for backfilling, and whenever backfilling operations are resumed after a period of inactivity.
2. Soft or loose subgrade materials are encountered wherever embankment or site fill is to be placed.
3. Fill material appears to be deviating from Specifications.

1.05 IMPORTED MATERIAL ACCEPTANCE

A. All imported materials specified in this section are subject to the following requirements:

1. All tests necessary for the Contractor to locate an acceptable source of imported material shall be made by the Contractor. Certification that the material conforms to the Specification requirements along with copies of the test results from a qualified commercial testing laboratory shall be submitted to the Engineer for approval at least 10 days before the material is required for use. All material samples shall be furnished by the Contractor at the Contractor's sole expense. Samples shall be representative and be clearly marked to show the source of the material and the intended use on the project. Sampling of the material source shall be done by the Contractor in accordance with ASTM D75. Notify the Engineer at least 24 hours prior to sampling. The Engineer may, at the Engineer's option, observe the sampling procedures. Tentative acceptance of the material source shall be based on an inspection of the source by the Engineer and/or the certified test results submitted by the Contractor to the Engineer, at the Engineer's discretion. No imported materials shall be delivered to the site until the proposed source and materials tests have been tentatively accepted in writing by the Engineer. Final acceptance will be based on tests made on samples of material taken from the completed and compacted course. Testing for final acceptance shall be performed by the Contractor.

2. Gradation tests by the Contractor shall be made on samples taken at the place of production prior to shipment. Samples of the finished product for gradation testing shall be taken from each 1,500 tons of prepared materials or more often as determined by the Engineer, if variation in gradation is occurring, or if the material appears to depart from the Specifications. Test results shall be forwarded to the Engineer within 48 hours after sampling.
3. If tests conducted by the Contractor or the Engineer indicate that the material does not meet Specification requirements, material placement will be terminated until corrective measures are taken. Material that does not conform to the Specification requirements and is placed in the Work shall be removed and replaced at the Contractor's sole expense. Sampling and testing performed by the Contractor shall be done at the Contractor's sole expense.

1.06 SEQUENCING AND SCHEDULING

A. Complete applicable Work specified on the Drawings; Section 02200, Site Preparation; Section 02315, Excavation; and Section 02319, Subgrade Preparation, prior to placing fill or backfill.

B. Backfill against concrete structures only after concrete has attained compressive strength, specified in Section 03300, Cast-in-Place Concrete. Obtain Engineer's acceptance of concrete work and attained strength prior to placing backfill.

C. Backfill around water- or other fluid-holding structures only after they are sealed and satisfactory completion of all required leakage tests as specified in Section 03300, Cast-in-Place Concrete.

D. Do not place granular base, subbase, or surfacing until after subgrade has been prepared as specified in Section 02319, Subgrade Preparation.

**PART 2 PRODUCTS**

2.01 SOURCE QUALITY CONTROL

A. Gradation Tests:

1. As necessary to locate acceptable sources of imported material.
2. During production of imported material, as required by Engineer and/or when gradation testing of prepared materials show variation in gradation is occurring, or if the material appears to depart from the Specifications. Test results shall be forwarded to the Engineer within 48 hours after sampling.

2.02 EARTHFILL

A. Excavated material from required excavations free from contamination, rocks larger than 3 inches, from roots and other organic matter, ashes, cinders, trash, debris, and other deleterious materials.

B. Provide imported material of equivalent quality, if required to accomplish Work.

2.03 GRANULAR FILL

A. Imported 1-inch minus crushed gravel or crushed rock.

B. Free from dirt, clay balls, and organic material.

C. Well-graded from coarse to fine and containing sufficient fines to bind material when compacted, but with maximum 5 percent by weight passing No. 200 sieve.

2.04 BACKFILL AROUND BURIED TANKS

A. As recommended by tank manufacturer.

2.05 COMPACTION EQUIPMENT

A. Compaction equipment shall be of suitable type and adequate to obtain the densities specified and shall provide satisfactory breakdown of materials to form a dense fill.

B. Backfill around structures that is mechanically compacted shall be compacted using light, hand operated, vibratory compactors and rollers.

C. Compaction equipment shall be operated in strict accordance with the manufacturer's instructions and recommendations. Equipment shall be maintained in such condition that it will deliver the manufacturer's rated compactive effort. If inadequate densities are obtained, larger and/or different types of additional equipment shall be provided by the Contractor. Hand-operated equipment shall be capable of achieving the specified densities.

2.06 MOISTURE CONTROL EQUIPMENT

A. Equipment for applying water shall be of a type and quality adequate for the Work, shall not leak, and shall be equipped with a distributor bar or other approved device to assure uniform application. Equipment for mixing and drying out material shall consist of blades, discs, or other approved equipment.

2.07 WATER FOR MOISTURE CONDITIONING

A. Free of hazardous or toxic contaminates, or contaminants deleterious to proper compaction. Furnish as required to accomplish the work.

2.08 BASE COURSE ROCK

A. As specified in Section 02710, Untreated Aggregate Base Course and Gravel Surfacing.

2.09 FOUNDATION STABILIZATION ROCK

A. Clean, hard, durable 3-inch minus crushed rock, or pit run rock, free of clay balls, or other organic materials or debris.

B. Uniformly graded from coarse to fine.

C. Fines content limited to provide a material that is non-moisture sensitive.

D. Maximum 2-1/2-inch particle size.

**PART 3 EXECUTION**

3.01 GENERAL

A. Keep placement surfaces free of water, debris, and foreign material during placement and compaction of fill and backfill materials.

B. Place and spread fill and backfill materials in horizontal lifts of uniform thickness, in a manner that avoids segregation, and compact each lift to specified densities prior to placing succeeding lifts. Slope lifts only where necessary to conform to final grades or as necessary to keep placement surfaces drained of water.

C. During filling and backfilling, keep level of fill and backfill around each structure and buried tank even.

D. Do not place fill or backfill, if fill or backfill material is frozen, or if surface upon which fill or backfill is to be placed is frozen.

E. If pipe, conduit, duct bank, or cable is to be laid within fill or backfill:

1. Fill or backfill to an elevation 2 feet above top of item to be laid.
2. Excavate trench for installation of item.
3. Install bedding, if applicable, as specified in Section 02320, Trench Backfill.
4. Install item.

5. Backfill envelope zone and remaining trench, as specified in Section 02320, Trench Backfill, before resuming filling or backfilling specified in this section.

F. Tolerances:

1. Final Lines and Grades: Within a tolerance of 0.1 foot unless dimensions or grades are shown or specified otherwise.
2. Grade to establish and maintain slopes and drainage as shown. Reverse slopes are not permitted.

G. Settlement: Correct and repair any subsequent damage to structures, pavements, curbs, slabs, piping, and other facilities, caused by settlement of fill or backfill material.

H. Compact all materials by mechanical means. Flooding or jetting will not be permitted. If compaction tests indicate that compaction or moisture content is not as specified, material placement shall be terminated and corrective action shall be taken by the Contractor prior to continued placement.

I. During all compacting operations, maintain optimum practicable moisture content required for compaction purposes in each lift of fill. Maintain moisture content uniform throughout the lift. Insofar as practicable, add water to the material at the site of excavation. Supplement, if required, by sprinkling the fill. At the time of compaction, the water content of the material shall be at optimum moisture content, plus or minus 2 percentage points.

## 3.02 BACKFILL UNDER AND AROUND STRUCTURES

A. Under Facilities: Within influence area beneath structures, slabs, pavements, curbs, piping, conduits, duct banks, and other facilities, backfill with granular fill, unless otherwise shown. Place granular fill in lifts of 6-inch maximum thickness and compact each lift to minimum of 95 percent relative compaction as determined in accordance with ASTM D1557.

B. The upper 6 inches of backfill beneath structures, slabs, and foundations shall consist of 6 inches of base course material as specified in Section 02710, Untreated Aggregate Base Course and Gravel Surfacing. Material shall be placed in lifts of 6-inch maximum thickness and compacted to minimum of 95 percent relative compaction as determined in accordance with ASTM D1557.

C. Subsurface Drainage: Backfill with granular drain material, where shown. Place granular drain material in lifts of 6-inch maximum thickness and compact each lift to minimum of 90 percent relative density.

D. Other Areas: Backfill with earthfill or granular fill to lines and grades shown, with proper allowance for topsoil thickness where shown. Place in lifts of 6-inch maximum thickness and compact each lift to minimum 90 percent relative compaction as determined in accordance with ASTM D1557.

3.03 FILL

A. Outside Influence Areas Beneath Structures, Tanks, Pavements, Curbs, Slabs, Piping, and Other Facilities: Unless otherwise shown, place earthfill as follows:

1. Allow for specified thickness of topsoil where required.
2. Maximum 8-inch thick lifts.
3. Place and compact fill across full width of embankment.
4. Compact to minimum 90 percent relative compaction as determined in accordance with ASTM D1557.
5. Dress completed embankment with allowance for topsoil, crest surfacing, and slope protection, where applicable.

3.04 SITE TESTING

A. Gradation:

1. One sample from each 1,500 tons of finished product or more often as determined by Engineer, if variation in gradation is occurring, or if material appears to depart from Specifications.
2. If test results indicate material does not meet Specification requirements, terminate material placement until corrective measures are taken.
3. Remove material placed in Work that does not meet Specification requirements.

B. In-Place Density Tests: In accordance with ASTM D2922 and/or D1556, as required by Engineer. During placement of materials, test as follows:

1. The number and location of in-place density testing is left to the discretion of the Engineer.
2. A minimum of two passing tests in areas beneath pads and structures. More frequent testing shall be conducted under large pads and structure foundations.
3. It is anticipated that initial placement of each material type will require frequent testing until the material and compaction methods are determined by the Engineer to provide compacted material that consistently meets the requirements of the Specifications. At the discretion of the Engineer, testing frequency may be reduced once satisfactory compaction methods which provide consistent and

predictable compaction are established to the satisfaction of the Engineer of which the Engineer is the sole judge.

4. If in the opinion of the Engineer, in-place density testing indicates inconsistent relative compaction or frequent relative compaction that does not meet the Specification requirements, the frequency of testing shall be increased.
5. If testing results indicates material does not meet Specification requirements, terminate additional material placement and compaction until corrective action is taken. All failing test results shall require corrective action by the Contractor. Corrective action could include, but is not limited to, removal and replacement of material, additional passes with compaction equipment, use of larger compaction equipment, aeration, addition of water to the material, or other means to improve compaction and to meet the requirements of the Specifications. Additional density testing without corrective action is not adequate to meet the compaction requirements. All areas where testing indicates the material does not meet the requirements of the Specifications shall be corrected to the satisfaction of the Engineer.

## 3.05 GRANULAR BASE, SUBBASE, AND SURFACING

A. Place and Compact as specified in Section 02710, Untreated Aggregate Base Course and Gravel Surfacing.

## 3.06 REPLACING OVEREXCAVATED MATERIAL

A. Replace excavation carried below grade lines shown or established by Engineer as follows:

1. Beneath Footings (Within Influence Area): Base course granular fill or foundation stabilization rock wrapped in a non-woven geotextile as specified in Section 02371, Geotextiles. Use of granular fill or foundation stabilization rock shall require approval of Engineer.
2. Beneath Fill or Backfill: Same material as specified for overlying fill or backfill.
3. Beneath Roadways (Within Influence Area): Granular fill or earthfill. Use of earthfill shall require approval of Engineer.
4. Beneath Slabs-On-Grade (Within Influence Area): Base Course as specified in Section 02710, Untreated Aggregate Base Course and Gravel Surfacing, or granular fill. Use of granular fill shall require approval of Engineer.
5. Trenches:
   a. Unauthorized Overexcavation: Either trench stabilization material or granular pipe base material, as specified in Section 02320, Trench Backfill.

b. Authorized Overexcavation: Trench stabilization material, as specified in Section 02320, Trench Backfill.

6. Permanent Cut Slopes (Where Overlying Area is Not to Receive Fill or Backfill):
   a. Flat to Moderate Steep Slopes (3:1, Horizontal Run: Vertical Rise or Flatter): Earthfill.
   b. Steep Slopes (Steeper than 3:1):
      1) Correct overexcavation by transitioning between overcut areas and designed slope adjoining areas, provided such cutting does not extend offsite or outside easements and right-of-ways, or adversely impacts existing facilities, adjacent property, or completed Work.
      2) Backfilling overexcavated areas is prohibited, unless in Engineer's opinion, backfill will remain stable, and overexcavated material is replaced as compacted earthfill.

## 3.07 PLACING FILL OVER GEOSYNTHETICS

A. General:

1. Place fill over geosynthetics with sufficient care so as not to damage them.
2. Place fill only by back dumping and spreading only.
3. Dump fill only on previously placed fill.
4. While operating equipment, avoid sharp turns, sudden starts or stops that could damage geosynthetics.

B. Hauling: Operate hauling equipment on minimum of 3 feet of covering.

C. Spreading:

1. Spreading equipment shall be track mounted low ground pressure, D-6 or lighter.
2. Operate spreading equipment on minimum of 12 inches of fill over geosynthetics.
3. Spread fill in same direction as unseamed overlaps to avoid separation of seams and joints.
4. Never push fill downslope. Spread fill over sideslopes by pushing up from slope bottom.
5. Maintain proper overlap of unseamed geosynthetics.
6. Avoid overstressing geosynthetics and seams.

D. Compaction: Compact fill only after uniformly spread to full thickness shown.

E. Geosynthetic Damage:

1. Mark punctures, tears, or other damage to geosynthetics, so repairs may be made.
2. Clear overlying fill as necessary to repair damage.
3. Repairs to geosynthetics shall be made by respective installers as specified in respective specification section for each geosynthetic.

3.08 ACCESS ROAD SURFACING

A. Place and compact as specified in Section 02710, Untreated Aggregate Base Course and Gravel Surfacing.

**END OF SECTION**

# SECTION 02319
# SUBGRADE PREPARATION

## PART 1 GENERAL

### 1.01 REFERENCES

A. The following is a list of standards which may be referenced in this section:

1. ASTM International (ASTM):
   a. D698, Standard Test Methods for Laboratory Compaction Characteristics of Soil Using Standard Effort (12,400 ft-lb/ft$^3$ (600 kN-m/m$^3$)).
   b. D1557, Test Method for Laboratory Compaction Characteristics of Soil Using Modified Effort (56,000 ft-lbf/ft$^3$ (2,700 kN-m/m$^3$)).

### 1.02 DEFINITIONS

A. Optimum Moisture Content: As defined in Section 02316, Fill and Backfill.

B. Prepared Ground Surface: Ground surface after completion of clearing and grubbing, scalping of sod, stripping of topsoil, excavation to grade, and scarification and compaction of subgrade.

C. Relative Compaction: As defined in Section 02316, Fill and Backfill.

D. Relative Density: As defined in Section 02316, Fill and Backfill.

E. Subgrade: Layer of existing soil after completion of clearing, grubbing, scalping of topsoil prior to placement of fill, roadway structure or base for floor slab.

F. Proof-Rolling: Testing of subgrade by compactive effort to identify areas that will not support the future loading without excessive settlement.

### 1.03 SEQUENCING AND SCHEDULING

A. Complete applicable Work specified on the Drawings and in Section 02200, Site Preparation; and Section 02315, Excavation, prior to subgrade preparation.

1.04 QUALITY ASSURANCE

A. Notify Engineer when subgrade is ready for compaction or proof-rolling or whenever compaction or proof-rolling is resumed after a period of extended inactivity.

1.05 ENVIRONMENTAL REQUIREMENTS

A. Prepare subgrade when unfrozen and free of ice and snow.

**PART 2 PRODUCTS (NOT USED)**

**PART 3 EXECUTION**

3.01 GENERAL

A. Keep subgrade free of water, debris, and foreign matter during compaction or proof-rolling.

B. Bring subgrade to proper grade and cross-section and uniformly compact surface.

C. Do not use sections of prepared ground surface as haul roads. Protect prepared subgrade from traffic.

D. Maintain prepared ground surface in finished condition until next course is placed.

3.02 COMPACTION

A. Under Earthfill: Three passes with three-wheeled power roller weighing approximately 10 tons.

B. Under Pavement Structure: Three passes with a loaded dump truck or similar heavy-wheeled vehicle.

C. Under Floor Slabs On Grade or Under Structures: Compact the upper 12 inches to minimum of 95 percent relative compaction as determined in accordance with ASTM D1557.

3.03 MOISTURE CONDITIONING

A. Dry Subgrade: Add water, then mix to make moisture content uniform throughout.

B. Wet Subgrade: Aerate material by blading, discing, harrowing, or other methods, to hasten drying process.

3.04 TESTING

A. Proof-roll subgrade with equipment specified in Article Compaction to detect soft or loose subgrade or unsuitable material, as determined by Engineer.

B. Test as required by Engineer for relative compaction as specified in Article Compaction.

3.05 CORRECTION

A. Soft or Loose Subgrade:

1. Scarify subgrade and compact to a dense, non-yielding state. Under floor slabs on grade, structures, or roadways, compact to 95 percent relative compaction as determined in accordance with ASTM D1557. Adjust moisture content as required to meet compaction requirements.
2. Over excavate as specified in Section 02315, Excavation, and replace with suitable material from the excavation, as specified in Section 02316, Fill and Backfill.

B. Unsuitable Material: Over excavate as specified in Section 02315, Excavation, and replace with suitable material from the excavation, as specified in Section 02316, Fill and Backfill.

**END OF SECTION**

# SECTION 02320
# TRENCH BACKFILL

## PART 1 GENERAL

### 1.01 REFERENCES

A. The following is a list of standards which may be referenced in this section:

1. American Public Works Association (APWA): Uniform Color Code for Temporary Marking of Underground Utility Locations.
2. ASTM International (ASTM):
   a. C33, Standard Specification for Concrete Aggregates.
   b. C94/C94M, Standard Specification for Ready-Mixed Concrete.
   c. C117, Standard Test Method for Materials Finer than 75 Micrometer (No. 200) Sieve in Mineral Aggregates by Washing.
   d. C136, Standard Test Method for Sieve Analysis of Fine and Coarse Aggregates.
   e. C150, Standard Specification for Portland Cement.
   f. C618, Standard Specification for Coal Fly Ash and Raw or Calcined Natural Pozzolan for Use as a Mineral Admixture in Concrete.
   g. D698, Standard Test Methods for Laboratory Compaction Characteristics of Soil Using Standard Effort (12,400 ft-lbf/ft$^3$ (600 kN-m/m$^3$)).
   h. D1140, Standard Test Method for Amount of Material in Soils Finer than the No. 200 (75 micrometer) Sieve.
   i. D1557, Standard Test Method for Laboratory Compaction Characteristics of Soil using Modified Effort (56,000 ft-lbf/ft$^3$ (2,700 kN-m/m$^3$)).
   j. D3776, Standard Test Methods for Mass Per Unit Area (Weight) of Fabric.
   k. D4253, Standard Test Methods for Maximum Index Density and Unit Weight of Soils Using a Vibratory Table.
   l. D4254, Standard Test Methods for Minimum Index Density and Unit Weight of Soils and Calculation of Relative Density.
   m. D4318, Standard Test Methods for Liquid Limit, Plastic Limit, and Plasticity Index of Soils.
   n. D4533, Standard Test Method for Trapezoid Tearing Strength of Geotextiles.
   o. D4832, Standard Test Method for Preparation and Testing of Controlled Low Strength Material (CLSM) Test Cylinders.

p. D4991, Standard Test Method for Leakage Testing of Empty Rigid Containers by Vacuum Method.
q. D5034, Standard Test Method for Breaking Strength and Elongation of Textile Fabrics (Grab Test).

3. National Electrical Manufacturers Association (NEMA): Z535.1, Safety Color Code.

1.02 DEFINITIONS

A. Base Rock: Granular material upon which manhole bases and other structures are placed.

B. Bedding Material: Granular material upon which pipes, conduits, cables, or duct banks are placed.

C. Imported Material: Material obtained by Contractor from source(s) offsite.

D. Lift: Loose (uncompacted) layer of material.

E. Pipe Zone: Backfill zone that includes full trench width and extends from prepared trench bottom to an upper limit above top outside surface of pipe, conduit, cable or duct bank.

F. Prepared Trench Bottom: Graded trench bottom after excavation and installation of stabilization material, if required, but before installation of bedding material.

G. Relative Compaction: As defined in Section 02316, Fill and Backfill.

H. Relative Density: As defined by ASTM D4253 and ASTM D4254.

I. Selected Backfill Material: Material available onsite that Engineer determines to be suitable for a specific use.

J. Well-Graded: A mixture of particle sizes that has no specific concentration or lack thereof of one or more sizes producing a material type that, when compacted, produces a strong and relatively incompressible soil mass free from detrimental voids. Well-graded does not define any numerical value that must be placed on the coefficient of uniformity, coefficient of curvature, or other specific grain size distribution parameters.

1.03 SUBMITTALS

A. Action Submittals:

1. Shop Drawings: Manufacturer's descriptive literature for marking tapes.

2. Samples:
   a. Trench stabilization material.
   b. Bedding and pipe zone material.
   c. Granular backfill.

B. Informational Submittals:

1. Catalog and manufacturer's data sheets for compaction equipment.
2. Certified Gradation Analysis: Submit not less than 30 days prior to delivery for imported materials or anticipated use for excavated materials, except for trench stabilization material that will be submitted prior to material delivery to Site.
3. Controlled Low Strength Material: Certified mix design and test results. Include material types and weight per cubic yard for each component of mix.

## PART 2 PRODUCTS

### 2.01 GEOTEXTILE

A. As specified in Section 02371, Geotextiles.

### 2.02 MARKING TAPE

A. Nondetectable:

1. Inert polyethylene, impervious to known alkalis, acids, chemical reagents, and solvents likely to be encountered in soil.
2. Thickness: Minimum 5 mils.
3. Width: 6 inches.
4. Identifying Lettering: Minimum 1-inch high, permanent black lettering imprinted continuously over entire length.
5. Manufacturers and Products:
   a. Reef Industries; Terra Tape.
   b. Mutual Industries; Non-detectable Tape.
   c. Presco; Non-detectable Tape.

B. Detectable:

1. Solid aluminum foil, visible on unprinted side, encased in protective high visibility, inert polyethylene plastic jacket.
2. Foil Thickness: Minimum 0.35 mils.
3. Laminate Thickness: Minimum 5 mils.
4. Width: 6 inches.
5. Identifying Lettering: Minimum 1-inch high, permanent black lettering imprinted continuously over entire length.

6. Joining Clips: Tin or nickel-coated furnished by tape manufacturer.
7. Manufacturers and Products:
   a. Reef Industries; Terra Tape, Sentry Line Detectable.
   b. Mutual Industries; Detectable Tape.
   c. Presco; Detectable Tape.

C. Color: In accordance with APWA Uniform Color Code for Temporary Marking of Underground Facilities.

| Color* | Facility |
|---|---|
| Red | Electric power lines, cables, conduit, and lightning cables |
| Orange | Communicating alarm or signal lines, cables, or conduit |
| Yellow | Gas, oil, steam, petroleum, or gaseous materials |
| Green | Sewers and drain lines |
| Blue | Potable water |
| Purple | Reclaimed water, irrigation, and slurry lines |
| *As specified in NEMA Z535.1, Safety Color Code. | |

## 2.03 TRENCH STABILIZATION MATERIAL

A. Base Rock:

1. Clean, hard, durable 3-inch minus crushed rock or gravel, or pit run, free from clay balls, other organic materials, or debris.
2. Uniformly graded from coarse to fine, less than 8 percent by weight passing the 1/4-inch sieve.
3. Wrap in a non-woven geotextile as specified in Section 02371, Geotextiles.

## 2.04 BEDDING MATERIAL AND PIPE ZONE MATERIAL

A. Unfrozen, friable, and no clay balls, roots, or other organic material.

B. Clean or gravelly sand with less than 5 percent passing No. 200 sieve, as determined in accordance with ASTM D1140, or gravel or crushed rock within maximum particle size and other requirements as follows unless otherwise specified.

1. Duct Banks: 3/4-inch maximum particle size.
2. PVC Irrigation System Piping and Ductile Iron Pipe with Polyethylene Wrap: 3/8-inch maximum particle size.

3. Pipe Under 18-Inch Diameter: 3/4-inch maximum particle size, except 1/4 inch for stainless steel pipe, copper pipe, tubing, and plastic pipe under 3-inch diameter.
4. Pipe Greater than 18-Inch Diameter: 1-1/2-inch maximum particle size for ductile iron pipe, concrete pipe, welded steel pipe, and pretensioned or prestressed concrete cylinder pipe.
5. Conduit and Direct-Buried Cable:
   a. Sand, clean or clean to silty, less than 12 percent passing No. 200 sieve.
   b. Individual Particles: Free of sharp edges.
   c. Maximum Size Particle: Pass a No. 4 sieve.
   d. If more than 5 percent passes No. 200 sieve, the fraction that passes No. 40 sieve shall be nonplastic as determined in accordance with ASTM D4318.

## 2.05 EARTH BACKFILL

A. Soil, loam, or other excavated material suitable for use as backfill.

B. Free from roots or organic matter, refuse, boulders and material larger than 4 inches in any dimension, or other deleterious materials.

## 2.06 GRANULAR BACKFILL

A. As specified in Section 02316, Fill and Backfill, for granular fill.

## 2.07 CONTROLLED LOW STRENGTH FILL

A. Select and proportion ingredients to obtain compressive strength between 50 and 150 psi at 28 days in accordance with ASTM D4832.

B. Materials:

1. Cement: ASTM C150, Type I or Type II.
2. Aggregate: ASTM C33, Size 7.
3. Fly Ash (if used): ASTM C618, Class C.
4. Water: Clean, potable, containing less than 500 ppm of chlorides.

## 2.08 GRAVEL SURFACING ROCK

A. As specified in Section 02710, Untreated Aggregate Base Course and Gravel Surfacing.

2.09 SOURCE QUALITY CONTROL

A. Perform gradation analysis in accordance with ASTM C136 for:

1. Earth backfill, including specified class.
2. Trench stabilization material.
3. Bedding and pipe zone material.

B. Certify Laboratory Performance of Mix Designs: Controlled low strength fill.

**PART 3 EXECUTION**

3.01 TRENCH PREPARATION

A. Water Control:

1. Promptly remove and dispose of water entering trench as necessary to grade trench bottom and to compact backfill and install manholes, pipe, conduit, direct-buried cable, or duct bank. Do not place concrete, lay pipe, conduit, direct-buried cable, or duct bank in water.
2. Remove water in a manner that minimizes soil erosion from trench sides and bottom.
3. Provide continuous water control until trench backfill is complete.

B. Remove foreign material and backfill contaminated with foreign material that falls into trench.

3.02 TRENCH BOTTOM

A. Firm Subgrade: Grade with hand tools, remove loose and disturbed material, and trim off high areas and ridges left by excavating bucket teeth. Allow space for bedding material if shown or specified.

B. Soft Subgrade: If subgrade is encountered that may require removal to prevent pipe settlement, notify Engineer. Engineer will determine depth of overexcavation, if any required.

3.03 GEOTEXTILE INSTALLATION

A. Where shown and as specified in Section 02371, Geotextiles, except as follows:

1. Extend geotextile for full width of trench bottom and up the trench wall to the top of the pipe zone, or base material for manholes and miscellaneous structures.
2. Anchor geotextile trench walls prior to placing trench stabilization or bedding material.

3. Provide 24-inch minimum overlap at joints.

3.04 TRENCH STABILIZATION MATERIAL INSTALLATION

A. Rebuild trench bottom with trench stabilization material.

B. Place material over full width of trench in 6-inch lifts to required grade, providing allowance for bedding thickness.

C. Compact each lift so as to provide a firm, unyielding support for the bedding material prior to placing succeeding lifts.

3.05 BEDDING

A. Furnish imported bedding material where, in the opinion of Engineer, excavated material is unsuitable for bedding or insufficient in quantity.

B. Place over the full width of the prepared trench bottom in two equal lifts when the required depth exceeds 8 inches.

C. Hand grade and compact each lift to provide a firm, unyielding surface.

D. Minimum Thickness: As follows:

1. Pipe 15 Inches and Smaller: 6 inches.
2. Pipe 18 Inches to 36 Inches: 6 inches.
3. Pipe 42 Inches and Larger: 8 inches.
4. Conduit: 3 inches.
5. Direct-Buried Cable: 3 inches.
6. Duct Banks: 3 inches.

E. Check grade and correct irregularities in bedding material. Loosen top 1 inch to 2 inches of compacted bedding material with a rake or by other means to provide a cushion before laying each section of pipe, conduit, direct-buried cable, or duct bank.

F. Install to form continuous and uniform support except at bell holes, if applicable, or minor disturbances resulting from removal of lifting tackle.

G. Bell or Coupling Holes: Excavate in bedding at each joint to permit proper assembly and inspection of joint and to provide uniform bearing along barrel of pipe or conduit.

## 3.06 BACKFILL PIPE ZONE

A. Upper limit of pipe zone shall not be less than following:

1. Pipe: 12 inches, unless shown otherwise.
2. Conduit: 3 inches, unless shown otherwise.
3. Direct-Buried Cable: 3 inches, unless shown otherwise.
4. Duct Bank: 3 inches, unless shown otherwise.

B. Restrain pipe, conduit, cables, and duct banks as necessary to prevent their movement during backfill operations.

C. Place material simultaneously in lifts on both sides of pipe and, if applicable, between pipes, conduit, cables, and duct banks installed in same trench.

1. Pipe 10-Inch and Smaller Diameter: First lift less than or equal to 1/2 pipe diameter.
2. Pipe Over 10-Inch Diameter: Maximum 6-inch lifts.

D. Thoroughly tamp each lift, including area under haunches, with handheld tamping bars supplemented by "walking in" and slicing material under haunches with a shovel to ensure that voids are completely filled before placing each succeeding lift.

E. After the full depth of the pipe zone material has been placed as specified, compact the material by a minimum of three passes with a vibratory plate compactor only over the area between the sides of the pipe and the trench walls.

F. Do not use power-driven impact compactors to compact pipe zone material.

## 3.07 MARKING TAPE INSTALLATION

A. Continuously install marking tape along centerline of all buried piping, on top of last lift of pipe zone material. Coordinate with piping installation drawings.

1. Detectable Marking Tape: Install with nonmetallic piping and waterlines.
2. Nondetectable Marking Tape: Install with metallic piping.

## 3.08 BACKFILL ABOVE PIPE ZONE

A. General:

1. Process excavated material to meet specified gradation requirements.
2. Adjust moisture content as necessary to obtain specified compaction.

3. Do not allow backfill to free fall into the trench or allow heavy, sharp pieces of material to be placed as backfill until after at least 2 feet of backfill has been provided over the top of pipe.
4. Do not use power driven impact type compactors for compaction until at least 4 feet of backfill is placed over top of pipe.
5. Backfill to grade with proper allowances for topsoil, crushed rock surfacing, and pavement thicknesses, wherever applicable.
6. Backfill around structures with same class backfill as specified for adjacent trench unless otherwise shown or specified.

B. Earth Backfill:

1. Place in all non-traffic areas.
2. Place in lifts not exceeding thickness of 9 inches.
3. Mechanically compact each lift to a minimum of 90 percent relative compaction prior to placing succeeding lifts.

C. Granular Backfill:

1. Place in all road or parking areas. Granular backfill may also be used in place of earth backfill in other areas.
2. Place in lifts not exceeding thickness of 8 inches.
3. Mechanically compact each lift to a minimum of 90 percent relative compaction prior to placing succeeding lifts.

D. Controlled Low Strength Fill:

1. Discharge from truck mounted drum type mixer into trench.
2. Place in lifts as necessary to prevent uplift (flotation) of new and existing facilities.

## 3.09 REPLACEMENT OF TOPSOIL

A. Replace topsoil in top 12 inches of backfilled trench.

B. Maintain the finished grade of topsoil even with adjacent area and grade as necessary to restore drainage.

## 3.10 MAINTENANCE OF TRENCH BACKFILL

A. After each section of trench is backfilled, maintain the surface of the backfilled trench even with the adjacent ground surface until final surface restoration is completed.

B. Gravel Surfacing Rock: Add gravel surfacing rock where applicable and as necessary to keep the surface of the backfilled trench even with the adjacent

ground surface, and grade and compact as necessary to keep the surface of backfilled trenches smooth, free from ruts and potholes, and suitable for normal traffic flow.

C. Topsoil: Add topsoil where applicable and as necessary to maintain the surface of the backfilled trench level with the adjacent ground surface.

D. Other Areas: Add excavated material where applicable and keep the surface of the backfilled trench level with the adjacent ground surface.

3.11 SETTLEMENT OF BACKFILL

A. Settlement of trench backfill, or of fill, or facilities constructed over trench backfill will be considered a result of defective compaction of trench backfill.

**END OF SECTION**

# SECTION 02371
# GEOTEXTILES

## PART 1 GENERAL

### 1.01 REFERENCES

A. The following is a list of standards that may be referenced in this section:

1. ASTM International (ASTM):
   a. D737, Test Method for Air Permeability of Textile Fabrics.
   b. D4355, Standard Test Method for Deterioration of Geotextiles by Exposure to Light, Moisture and Heat in a Xenon Arc Type Apparatus.
   c. D4491, Standard Test Methods for Water Permeability of Geotextiles by Permittivity.
   d. D4533, Standard Test Method for Trapezoid Tearing Strength of Geotextiles.
   e. D4595, Standard Test Method for Tensile Properties of Geotextiles by the Wide-Width Strip Method.
   f. D4632, Standard Test Method for Grab Breaking Load and Elongation of Geotextiles.
   g. D4716, Test Method for Determining the (In-Plane) Flow Rate Per Unit Width and Hydraulic Transmissivity of a Geosynthetic Using a Constant Head.
   h. D4751, Standard Test Method for Determining Apparent Opening Size of a Geotextile.
   i. D4833, Standard Test Method for Index Puncture Resistance of Geotextiles, Geomembranes, and Related Products.
   j. D4884, Standard Test Method for Strength of Sewn or Thermally Bonded Seams of Geotextiles.
   k. D4886, Standard Test Method for Abrasion Resistance of Geotextiles (Sand Paper/Sliding Block Method).
   l. D5199, Standard Test Method for Measuring the Nominal Thickness of Geosynthetics.
   m. D5261, Standard Test Method for Measuring Mass Per Unit Area of Geotextiles.
   n. D6193, Standard Practice for Stitches and Seams.

### 1.02 DEFINITIONS

A. Fabric: Geotextile, a permeable geosynthetic comprised solely of textiles.

B. Minimum Average Roll Value (MinARV): Minimum of series of average roll values representative of geotextile furnished.

C. Maximum Average Roll Value (MaxARV): Maximum of series of average roll values representative of geotextile furnished.

D. Nondestructive Sample: Sample representative of finished Work, prepared for testing without destruction of Work.

E. Overlap: Distance measured perpendicular from overlapping edge of one sheet to underlying edge of adjacent sheet.

F. Seam Efficiency: Ratio of tensile strength across seam to strength of intact geotextile, when tested according to ASTM D4884.

G. Standard Specifications: When referenced in this section, shall mean the 2004 edition of the Washington State Department of Transportation Standard Specifications for Road, Bridge, and Municipal Construction.

1.03 SUBMITTALS

A. Action Submittals:

1. Samples:
   a. Geotextile: One-piece, minimum 18 inches long, taken across full width of roll of each type and weight of geotextile furnished for Project. Label each with brand name and furnish documentation of lot and roll number from which each Sample was obtained.

B. Informational Submittals: Certifications from each geotextile manufacturer that furnished products have specified property values. Certified property values shall be either minimum or maximum average roll values, as appropriate, for geotextiles furnished.

1.04 DELIVERY, STORAGE, AND HANDLING

A. Deliver each roll with sufficient information attached to identify it for inventory and quality control.

B. Handle products in manner that maintains undamaged condition.

C. Do not store products directly on ground. Ship and store geotextile with suitable wrapping for protection against moisture and ultraviolet exposure. Store geotextile in way that protects it from elements. If stored outdoors, elevate and protect geotextile with waterproof cover.

1.05 SCHEDULING AND SEQUENCING

A. Where geotextile is to be laid directly upon ground surface, prepare subgrade as specified in Section 02319, Subgrade Preparation, first.

B. Notify Engineer whenever geotextiles are to be placed. Do not place geotextile without Engineer's approval of underlying materials.

## PART 2 PRODUCTS

### 2.01 NONWOVEN GEOTEXTILE

A. Pervious sheet of polyester, polypropylene, or polyethylene fabricated into stable network of fibers that retain their relative position with respect to each other. Nonwoven geotextile shall be composed of continuous or discontinuous (staple) fibers held together through needle-punching, spun-bonding, thermal-bonding, or resin-bonding.

B. Geotextile Edges: Selvaged or otherwise finished to prevent outer material from pulling away from geotextile.

C. Unseamed Sheet Width: Minimum 12 feet.

D. Nominal Weight per Square Yard: 12 ounces per ASTM D5261.

E. Physical Properties: Conform to requirements of the Standard Specifications with the exception that only nonwoven geotextiles are acceptable to accomplish the Work where buried.

## PART 3 EXECUTION

### 3.01 LAYING GEOTEXTILE

A. Lay and maintain geotextile smooth and free of tension, folds, wrinkles, or creases.

### 3.02 SHEET ORIENTATION ON SLOPES

A. Orient geotextile with long dimension of each sheet parallel to direction of slope.

### 3.03 JOINTS

A. Unseamed Joints:

1. Overlapped.
2. Overlap, unless otherwise shown:
   a. Foundation/Subgrade Stabilization: Minimum 18 inches.
   b. Drain Trenches: Minimum 18 inches, except overlap shall equal trench width if trench width is less than 18 inches.
   c. Other Applications: Minimum 12 inches.

3.04 SECURING GEOTEXTILE

A. Secure geotextile during installation as necessary with sandbags or other means approved by Engineer.

3.05 PLACING PRODUCTS OVER GEOTEXTILE

A. Before placing material over geotextile, notify Engineer. Do not cover installed geotextile until after Engineer provides authorization to proceed.

B. If tears, punctures, or other geotextile damage occurs during placement of overlying products, remove overlying products as necessary to expose damaged geotextile. Repair damage as specified in Article Repairing Geotextile.

3.06 INSTALLING GEOTEXTILE IN TRENCHES

A. Place geotextile in a way that will completely envelope trench stabilization material to be placed in trench and with specified overlap at joints. Overlap geotextile in direction of flow. Place geotextile in a way and with sufficient slack for geotextile to contact trench bottom and sides fully when trench is backfilled.

B. After trench stabilization material is placed to required grade, fold geotextile over top of trench stabilization material, unless otherwise shown. Maintain overlap until overlying fill or backfill is placed.

3.07 SILT FENCE APPLICATIONS

A. Install geotextile in one piece, or continuously sewn to make one piece, for full length and height of fence, including portion of geotextile buried in toe trench.

B. Install bottom edge of sheet in toe trench and backfill in a way that securely anchors geotextile in trench.

C. Securely fasten geotextile to each support post in a way that will not result in tearing of geotextile when fence is subjected to service loads.

D. Promptly repair or replace silt fence that becomes damaged.

3.08 REPAIRING GEOTEXTILE

A. Repair or replace torn, punctured, flawed, deteriorated, or otherwise damaged geotextile.

B. Repair Procedure:

1. Place patch of undamaged geotextile over damaged area and at least 18 inches in all directions beyond damaged area.
2. Remove interfering material as necessary to expose damaged geotextile for repair.
3. Sew patches or secure them with heat fusion tacking or with pins and washers, as specified above in Article Securing Geotextile, or by other means approved by Engineer.

**END OF SECTION**

# SECTION 02710
# UNTREATED AGGREGATE
# BASE COURSE AND GRAVEL SURFACING

## PART 1 GENERAL

### 1.01 REFERENCES

A. The following is a list of standards which may be referenced in this section:

1. American Association of State Highway and Transportation Officials (AASHTO):
   a. T11, Standard Method of Test for Materials Finer Than 75μm (No. 200) Sieve in Mineral Aggregates by Washing.
   b. T27, Standard Method of Test for Sieve Analysis of Fine and Coarse Aggregates.
   c. T89, Standard Specification for Determining the Liquid Limit of Soils.
   d. T90, Standard Specification for Determining the Plastic Limit and Plasticity Index of Soils.
   e. T96, Standard Specification for Resistance to Degradation of Small-Size Coarse Aggregate by Abrasion and Impact in the Los Angeles Machine.
   f. T99, Standard Specification for the Moisture-Density Relations of Soils Using a 2.5 kg (5.5 pound) Rammer and a 305 mm (12 in) Drop.
   g. T180, Standard Specification for Moisture-Density Relations of Soils Using a 4.54 kg (10-lb) Rammer and a 457 mm (18-in) Drop.
   h. T190, Standard Specification for Resistance R-Value and Expansion Pressure of Compacted Soils.
   i. T265, Standard Method of Test for Laboratory Determination of Moisture Content of Soils.
   j. T310, Standard Specification for In-Place Density and Moisture Content of Soil and Soil-Aggregate by Nuclear Methods (Shallow Depth).
2. ASTM International (ASTM):
   a. C88, Test Method for Soundness of Aggregates by Use of Sodium Sulfate or Magnesium Sulfate.
   b. D1883, Test Method for CBR (California Bearing Ratio) of Laboratory Compacted Soils.
   c. D2419, Test Method for Sand Equivalent Value of Soils and Fine Aggregate.

d. D4791, Test Method for Flat Particles, Elongated Particles, or Flat and Elongated Particles in Coarse Aggregate.

1.02 DEFINITIONS

A. Completed Course: Compacted, unyielding, free from irregularities, with smooth, tight, even surface, true to grade, line, and cross-section.

B. Completed Lift: Compacted with uniform cross-section thickness.

C. Standard Specifications: When referenced in this section, shall mean Washington State Department of Transportation 2004 Standard Specifications for Road, Bridge, and Municipal Construction.

1.03 SUBMITTALS

A. Informational Submittals:

1. Certified Test Results on Source Materials: Submit copies from commercial testing laboratory 20 days prior to delivery of materials to Project showing materials meeting the physical qualities specified.

## PART 2 PRODUCTS

2.01 BASE COURSE

A. As specified for Crushed Surfacing Base Course in Section 9-03.9(3), of the Standard Specifications.

2.02 SOURCE QUALITY CONTROL

A. Perform tests necessary to locate acceptable source of materials meeting specified requirements.

B. Final approval of aggregate material will be based on test results of installed materials.

C. Should separation of coarse from fine materials occur during processing or stockpiling, immediately change methods of handling materials to correct uniformity in grading.

## PART 3 EXECUTION

3.01 SUBGRADE PREPARATION

A. As specified in Section 02319, Subgrade Preparation.

B. Obtain Engineer's acceptance of subgrade before placing base course or surfacing material.

C. Do not place base course or surfacing materials in snow or on soft, muddy, or frozen subgrade.

3.02 EQUIPMENT

A. Compaction Equipment: Adequate in design and number to provide compaction and to obtain specified density for each layer.

3.03 HAULING AND SPREADING

A. Hauling Materials:

1. Do not haul over surfacing in process of construction.
2. Loads: Of uniform capacity.
3. Maintain consistent gradation of material delivered; loads of widely varying gradations will be cause for rejection.

B. Spreading Materials:

1. Distribute material to provide required density, depth, grade, and dimensions with allowance for subsequent lifts.
2. Produce even distribution of material upon roadway or prepared surface without segregation.
3. Should segregation of coarse from fine materials occur during placing, immediately change methods of handling materials to correct uniformity in grading.

3.04 CONSTRUCTION OF COURSES

A. Untreated Aggregate Base Course:

1. Maximum Completed Lift Thickness: 6 inches.
2. Completed Course Total Thickness: As shown.
3. Spread lift on preceding course to required cross-section.
4. Lightly blade and roll surface until thoroughly compacted.
5. Add keystone to achieve compaction and as required when aggregate does not compact readily due to lack of fines or natural cementing properties, as follows:
   a. Use leveling course or surfacing material as keystone.
   b. Spread evenly on top of base course, using spreader boxes or chip spreaders.

c. Roll surface until keystone is worked into interstices of base course without excessive displacement.
d. Continue operation until course has become thoroughly keyed, compacted, and will not creep or move under roller.

6. Blade or broom surface to maintain true line, grade, and cross-section.

3.05 ROLLING AND COMPACTION

A. In accordance with Section 4-04.3(5) of the Standard Specifications.

3.06 SURFACE TOLERANCES

A. Blade or otherwise work surfacing as necessary to maintain grade and cross-section at all times, and to keep surface smooth and thoroughly compacted.

B. Finished Surface of Untreated Aggregate Base Course: Within 0.04 foot from lower edge of 10-foot straightedge placed on finished surface, parallel to centerline.

C. Overall Average: Within plus or minus 0.01 foot from crown and grade specified.

3.07 FIELD QUALITY CONTROL

A. In-Place Density Tests: Provide testing laboratory and Engineer at least 4 hours advance notification prior to testing.

3.08 CLEANING

A. Remove excess material from the Work area. Clean stockpile and staging areas of all excess aggregate.

**END OF SECTION**

# SECTION 02771
# CONCRETE SIDEWALKS

## PART 1 GENERAL

### 1.01 REFERENCES

A. The following is a list of standards which may be referenced in this section:

1. American Association of State Highway and Transportation Officials (AASHTO): T 99, Standard Specification for the Moisture-Density Relations of Soils Using a 2.5 kg (5.5 pound) Rammer and a 305 mm (12 in.) Drop.
2. American Concrete Institute (ACI): 304R, Guide for Measuring, Mixing, Transporting, and Placing Concrete.
3. ASTM International (ASTM):
   a. C94, Standard Specification for Ready-Mixed Concrete.
   b. C309, Standard Specification for Liquid Membrane-Forming Compounds for Curing Concrete.
   c. D994, Standard Specification for Preformed Expansion Joint Filler for Concrete (Bituminous Type).

### 1.02 SUBMITTALS

A. Action Submittals: Complete data on concrete mix, including aggregate gradations and admixtures in accordance with requirements of ASTM C94.

B. Informational Submittals:

1. Curing Compound: Manufacturer's Certificate of Compliance and application instructions.
2. Ready-mix delivery ticket for each truck in accordance with ASTM C94.

## PART 2 PRODUCTS

### 2.01 EXPANSION JOINT FILLER

A. Preformed asphalt-impregnated, expansion joint material meeting ASTM D994, 1/2 inch thick.

### 2.02 CONCRETE

A. As specified in Section 03300, Cast-in-Place Concrete.

B. Maximum Aggregate Size: 1-1/2 inch.

C. Slump: 2 inches to 4 inches.

2.03 CURING COMPOUND

A. Liquid membrane forming, clear or translucent, suitable for spray application and meeting ASTM C309, Type 1.

**PART 3 EXECUTION**

3.01 INSTALLATION

A. Perform Work in accordance with Section 03300, Cast-in-Place Concrete.

3.02 FORMWORK

A. Lumber Materials:

1. 2-inch dressed dimension lumber, or metal of equal strength, straight, free from defects that would impair appearance or structural quality of completed sidewalk.
2. 1-inch dressed lumber or plywood may be used where short-radius forms are required.

B. Metals: Steel in new undamaged condition.

C. Setting Forms:

1. Construct forms to shape, lines, grades, and dimensions.
2. Stake securely in place.

D. Bracing:

1. Brace forms to prevent change of shape or movement resulting from placement.
2. Construct short-radius curved forms to exact radius.

E. Tolerances:

1. Do not vary tops of forms from gradeline more than 1/8 inch when checked with 10-foot straightedge.
2. Do not vary alignment of straight sections more than 1/8 inch in 10 feet.

3.03 PLACING CONCRETE

A. Prior to placing concrete, remove water from excavation and debris and foreign material from forms.

B. Place concrete as soon as possible, and within 1-1/2 hours after adding cement to mix without segregation or loss of ingredients, and without splashing.

C. Place, process, finish, and cure concrete in accordance with applicable requirements of ACI 304, and this section. Wherever requirements differ, the more stringent shall govern.

D. To compact, vibrate until concrete becomes uniformly plastic.

3.04 SIDEWALK CONSTRUCTION

A. Thickness:

1. 4 inches in walk areas.
2. 6 inches in driveway areas.

B. Expansion Joints: Place around posts, poles, or other objects penetrating sidewalk. Install expansion joint filler at each joint.

C. Contraction Joints:

1. Provide transversely to walks, maximum 15-foot intervals.
2. Dimensions: 3/16-inch by 1-inch weakened plane joints.
3. Construct straight and at right angles to surface of walk.

D. Finish:

1. Broom surface with fine-hair broom at right angles to length of walk and tool at edges, joints, and markings.
2. Mark walks transversely at 5-foot intervals with jointing tool; finish edges with rounded steel edging tool.
3. Apply curing compound to exposed surfaces upon completion of finishing.
4. Protect sidewalk from damage and allow to cure for at least 7 days.

**END OF SECTION**

# SECTION 02821
# CHAIN LINK FENCES AND GATES

## PART 1 GENERAL

### 1.01 REFERENCES

A. The following is a list of standards which may be referenced in this section:

1. ASTM International (ASTM):
   a. A121, Standard Specification for Zinc-Coated (Galvanized) Steel Barbed Wire.
   b. A392, Standard Specification for Zinc-Coated Steel Chain-Link Fence Fabric.
   c. A491, Standard Specification for Aluminum-Coated Steel Chain-Link Fence Fabric.
   d. A585, Standard Specification for Aluminum-Coated Steel Barbed Wire.
   e. A824, Standard Specification for Metallic-Coated Steel Marcelled Tension Wire for Use with Chain Link Fence.
   f. A1011/A1011M, Specification for Steel, Sheet and Strip, Hot-Rolled, Carbon, Structural, High-Strength Low-Alloy and High-Strength Low-Alloy with Improved Formability.
   g. B6, Standard Specification for Zinc.
   h. C94, Standard Specification for Ready-Mixed Concrete.
   i. C143, Standard Test Method for Slump of Hydraulic-Cement Concrete.
   j. C387, Standard Specifications for Packaged, Dry, Combined Materials for Mortar and Concrete.
   k. F552, Standard Terminology Relating to Chain-Link Fencing.
   l. F567, Standard Practice for Installation of Chain-Link Fence.
   m. F626, Standard Specification for Fence Fittings.
   n. F668, Standard Specification for Poly (Vinyl Chloride) (PVC)-Coated Steel Chain-Link Fence Fabric.
   o. F900, Standard Specification for Industrial and Commercial Swing Gates.
   p. F1043, Standard Specification for Strength and Protective Coatings on Metal Industrial Chain Link Fence Framework.
   q. F1083, Standard Specification for Pipe, Steel, Hot-Dipped Zinc-Coated (Galvanized) Welded, for Fence Structures.
   r. F1183, Standard Specifications for Aluminum Alloy Chain Link Fence Fabric.

s. F1184, Standard Specifications for Industrial and Commercial Horizontal Slide Gates.

2. Institute of Electrical and Electronic Engineers (IEEE), Inc.: C2, National Electrical Safety Code.
3. National Electrical Manufacturers Association (NEMA): 250, Enclosures for Electrical Equipment (1,000 volts max.).

1.02 DEFINITIONS

A. Terms as defined in ASTM F552.

1.03 SUBMITTALS

A. Action Submittals:

1. Shop Drawings: Detailed information and specifications for materials, finishes, and dimensions.

B. Informational Submittals:

1. Manufacturer's recommended installation instructions.
2. Evidence of Supplier and installer qualifications.

1.04 SCHEDULING AND SEQUENCING

A. Complete necessary Site preparation and grading before installing chain link fence and gates.

**PART 2 PRODUCTS**

2.01 GENERAL

A. Match style, finish, and color of each fence component with that of other fence components.

2.02 CHAIN LINK FENCE FABRIC

A. Galvanized fabric conforming to ASTM A392, Class 1; galvanized after weaving.

B. Height: 72 inches, unless otherwise shown.

C. Wire Gauge: No. 9.

D. Pattern: 2-inch diamond-mesh.

E. Diamond Count: Manufacturer's standard and consistent for fabric furnished of same height.

F. Loops of Knuckled Selvages: Closed or nearly closed with space not exceeding diameter of wire.

G. Wires of Twisted Selvages:

1. Twisted in a closed helix three full turns.
2. Cut at an angle to provide sharp barbs that extend minimum 1/4 inch beyond twist.

2.03 POSTS

A. General:

1. Strength and Stiffness Requirements: ASTM F1043, Heavy Industrial Fence, except as modified in this section.
2. Steel Pipe: ASTM F1083.
3. Roll-Formed Steel Shapes: Roll-formed from ASTM A1011/A1011M, Grade 45, steel.
4. Lengths: Manufacturer's standard with allowance for minimum embedment below finished grade of 22 inches plus 3 inches for each 1 foot of fence height greater than 4 feet.
5. Protective Coatings:
   a. Zinc Coating: ASTM F1043, Type A external and internal coating.

B. Line Posts:

1. Steel Pipe:
   a. Outside Diameter: 2.375 inches.
   b. Weight: 3.65 pounds per foot.

C. End, Corner, Angle, and Pull Posts:

1. Steel Pipe:
   a. Outside Diameter: 2.875 inches.
   b. Weight: 5.79 pounds per foot.

D. Posts for Swing Gates: ASTM F900.

2.04 TOP RAILS AND BRACE RAILS

A. Galvanized steel pipe.

B. Protective Coatings: As specified for posts.

C. Strength and Stiffness Requirements: ASTM F1043, Top Rail, Heavy or Light Industrial Fence.

D. Steel Pipe:

1. ASTM F1083.
2. Outside Diameter: 1.66 inches.
3. Weight: 2.27 pounds per foot.

2.05 FENCE FITTINGS

A. General: In conformance with ASTM F626, except as modified by this article.

B. Post and Line Caps: Designed to accommodate passage of top rail through cap, where top rail required.

C. Tension and Brace Bands: No exceptions to ASTM F626.

D. Tension Bars:

1. One-piece.
2. Equal in length to full height of fabric.

E. Truss Rod Assembly: 3/8 inch diameter.

F. Barb Arms: "Y" arms for supporting three strands of barbed wire.

2.06 TENSION WIRE

A. Zinc-coated steel marcelled tension wire conforming to ASTM A824, Type II, Class 2.

2.07 BARBED WIRE

A. Zinc-Coated Barbed Wire: ASTM A121, Chain Link Fence Grade:

1. Line Wire: Two strands of No. 12-1/2 gauge.
2. Barbs:
   a. Number of Points: Four.
   b. Length: 3/8 inch minimum.
   c. Shape: Round.
   d. Diameter: No. 14 gauge.
   e. Spacing: 5 inches.

2.08 BARBED TAPE

A. Reinforced barbed tape, single coil, for fence toppings shall be fabricated from 430 series stainless steel with a hardness range of Rockwell (30N) 37-45 conforming to the requirements of ASTM A176. The stainless steel strip shall be 0.025 inch thick by 1 inch wide before fabrication. Each barb shall be a minimum of 1.2 inches in length, in groups of four, spaced on 4-inch centers. The stainless steel core wire shall have a 0.098 inch diameter with a minimum tensile strength of 140 psi and shall be in accordance with ASTM A478.

2.09 GATES

A. General:

1. Gate Operation: Opened and closed easily by one person.
2. Welded Steel Joints: Paint with zinc-based paint.
3. Chain Link Fabric: Attached securely to gate frame at intervals not exceeding 15 inches.

B. Swing Gates: ASTM F900.

1. Hinges:
   a. Furnished with large bearing surfaces for clamping in position.
   b. Designed to swing either 180 degrees outward, 180 degrees inward, or 90 degrees in or out, as shown, and not twist or turn under action of gate.
2. Latches: Plunger bar arranged to engage stop, except single gates of openings less than 10 feet wide may each have forked latch.
3. Gate Stops: Mushroom type or flush plate with anchors, suitable for setting in concrete.
4. Locking Device and Padlock Eyes: Integral part of latch, requiring one padlock for locking both leaves of double gate.
5. Hold-Open Keepers: Designed to automatically engage gate leaf and hold it in open position until manually released.

2.10 CONCRETE

A. Provide as specified in Section 03300, Cast-in-Place Concrete.

**PART 3 EXECUTION**

3.01 GENERAL

A. Install chain link fences and gates in accordance with ASTM F567, except as modified in this section, and in accordance with fence manufacturer's

recommendations, as approved by Engineer. Erect fencing in straight lines between angle points.

B. Provide all necessary hardware for a complete fence and gate installation.

C. Make connections to existing fences as shown on the Drawings, to prevent passage of animals or persons.

3.02 PREPARATION

A. Establish locations of fence lines, gates, and terminal posts.

B. Embedment Coating: Coat portion of galvanized or aluminum-coated steel posts that will be embedded in concrete as specified in Section 09900, Painting and Protective Coatings. Extend coating 1 inch above top of concrete.

3.03 POST SETTING

A. Driven posts are not acceptable.

B. Post Hole Depth:

1. Minimum 3 feet below finished grade.
2. 2 inches deeper than post embedment depth below finish grade.

C. Backfill post holes with concrete to 2 inches above finished grade.

D. Before concrete sets, crown and finish top of concrete to readily shed water.

3.04 BRACING

A. Brace gate and corner posts diagonally to adjacent line posts to ensure stability.

3.05 TOP RAILS

A. Install top rail sleeves with springs at 105 feet maximum spacing to permit expansion in rail.

3.06 CHAIN LINK FABRIC

A. Do not install fabric until concrete has cured minimum 7 days.

B. Install fabric with twisted and barbed selvage at top.

3.07 BARBED WIRE

A. Install three strands of barbed wire on brackets, tighten, and secure at each bracket.

3.08 BARBED TAPE INSTALLATION

A. Stainless steel reinforced barbed tape shall be installed as detailed on the Drawings. Barbed tape shall be stretched out to its manufacturer's recommended length, set on top of the barbed wire and "Y" shaped support arms, and then secured to the barbed wire. The barbed tape shall be secured to the barbed wire at the two points and at every spiral turn of both coils as shown on the Drawings.

3.09 GATES

A. Hang gates and adjust hardware so gates operate satisfactorily from open or closed position.

B. Set gate stops in concrete to engage center drop rod or plunger bar.

3.10 ELECTRICAL GROUNDING

A. Ground fences in accordance with applicable requirements of IEEE C2, National Electrical Safety Code.

3.11 FIELD QUALITY CONTROL

A. Gate Tests: Prior to acceptance of installed gates, demonstrate proper operation of gates under each possible open and close condition specified.

**END OF SECTION**

# SECTION 03100
# CONCRETE FORMWORK

## PART 1 GENERAL

### 1.01 REFERENCES

A. The following is a list of standards which may be referenced in this section:

1. American Concrete Institute (ACI):
   a. 117, Standard Specifications for Tolerances for Concrete Construction and Materials.
   b. 318/318R, Building Code Requirements for Reinforced Concrete.
   c. 347, Formwork for Concrete.

### 1.02 DESIGN REQUIREMENTS

A. Design formwork in accordance with ACI 347 and ACI 318 to provide concrete finishes specified in Section 03300, Cast-in-Place Concrete.

B. When high range water reducer (superplasticizer) is used in concrete mix, forms shall be designed for full hydrostatic pressure per ACI 347.

C. Make joints in forms watertight.

D. Limit panel deflection to $1/360^{th}$ of each component span to achieve tolerances specified.

### 1.03 SUBMITTALS

A. Action Submittals:

1. Shop Drawings:
   a. Layout of panel joints and tie hole pattern.
   b. Form Ties-Tapered Through-Bolts: Proposed method of sealing form tie hole; coordinate with details shown.
   c. Manufacturer's Data for the Following Product: Form release agent.
2. Samples:
   a. One each as follows: Form ties.

B. Informational Submittals: Statement of qualification for formwork designer.

1.04 QUALIFICATIONS

A. Formwork Designer: Formwork, falsework, and shoring design shall be by an engineer licensed in the state of Project.

**PART 2 PRODUCTS**

2.01 FORM MATERIALS

A. Wall Forms:

1. Materials: Plywood, hard plastic finished plywood, overlaid waterproof particle board, or steel in "new and undamaged" condition, of sufficient strength and surface smoothness to produce specified finish.

B. All Other Forms: Materials as specified for wall forms.

C. Form Release Agent:

1. Material: Release agent shall not bond with, stain, or adversely affect concrete surfaces, and shall not impair subsequent treatments of concrete surfaces when applied to forms A ready-to-use water based material formulated to reduce or eliminate surface imperfections, containing no mineral oil or organic solvents. Environmentally safe, meeting local, state, and federal regulations and can be used in potable water facilities.
2. Manufacturers and Products:
   a. Master Builders, Inc.; Rheofinish.
   b. Cresset Chemical Company; Crete-Lease 20-VOC.
   c. US Mix Products Company; US SPEC Slickote.

D. Beveled Edge Corner Strips: Nonabsorbent material, compatible with form surface, fully sealed on all sides prohibiting loss of paste or water between the two surfaces.

E. Form Ties:

1. Material: Stainless steel.
2. Spreader Inserts:
   a. Conical or spherical type.
   b. Design to maintain positive contact with forming material.
   c. Furnish units that will leave no metal closer than 1 inch to concrete surface when forms, inserts, and tie ends are removed.
3. Wire ties not permitted.

4. Flat bar ties for panel forms, furnish plastic or rubber inserts with minimum 1-inch depth and sufficient dimensions to permit patching of tie hole.
5. Water Stop Ties: For all walls, furnish one of the following:
   a. Integral steel water stop 0.103 inch thick and 0.625 inch in diameter tightly and continuously welded to tie.
   b. Neoprene water stop 3/16 inch thick and 15/16-inch diameter whose center hole is 1/2-diameter of tie, or molded plastic water stop of comparable size.
   c. Orient water stop perpendicular to tie and symmetrical about center of tie.
   d. Design ties to prevent rotation or disturbance of center portion of tie during removal of ends and to prevent water leaking along tie.
6. Through-Bolts: Tapered minimum 1-inch diameter at smallest end.
7. Elastic Vinyl Plug:
   a. Design and size of plug to allow insertion with tool to enable plug to elongate and return to original length and diameter upon removal forming watertight seal.
   b. Manufacturer and Product: Dayton/Richmond Co., Miamisburg, OH; A58 Sure Plug.

## PART 3 EXECUTION

### 3.01 FORM SURFACE PREPARATION

A. Thoroughly clean form surfaces that will be in contact with concrete or that have been in contact with previously cast concrete, dirt, and other surface contaminants prior to coating surface.

B. Exposed Wood Forms in Contact with Concrete: Apply form release agent as recommended by the manufacturer.

C. Steel Forms: Apply form release agent to steel forms as soon as they are cleaned to prevent discoloration of concrete from rust.

### 3.02 ERECTION

A. General: Unless specified otherwise, follow applicable recommendations of ACI 347.

B. Beveled Edges (Chamfer): Form 3/4-inch bevels at concrete edges, unless otherwise shown.

C. Wall Forms:

1. Do not reuse forms with damaged surfaces.
2. Locate form ties and joints in an uninterrupted uniform pattern.
3. Inspect form surfaces prior to installation to assure conformance with specified tolerances.

D. Forms for Curbs, Sidewalks, and Driveways:

1. Provide standard steel or wood forms.
2. Set forms to true lines and grades, and securely stake in position.

E. Form Tolerances: Provide forms in accordance with ACI 117, 347 and 318 and the following tolerances for finishes specified:

1. Wall Tolerances:
   a. Straight Vertical or Horizontal Wall Surface: Flat planes within tolerance specified.
   b. Wall Type W-A:
      1) Plumb within 1/4 inch in 10 feet or within 1 inch from top to bottom for walls over 40 feet high.
      2) Depressions in Wall Surface: Maximum 5/16 inch when 10-foot straightedge is placed on high points in all directions.
   c. Wall Type W-B:
      1) Plumb within 1/8 inch in 10 feet or within 1/2 inch from top to bottom for walls over 40 feet high.
      2) Depressions in Wall Surface: Maximum 1/8 inch when 10-foot straightedge is placed on high points in all directions.
   d. Thickness: Maximum 1/4 inch minus or 1/2 inch plus from dimension shown.
   e. Form Offset: Between adjacent pieces of formwork, facing material shall not exceed 1/4 inch.

## 3.03 FORM REMOVAL

A. Nonsupporting forms (sides of beams, walls, columns, and similar parts of Work) may be removed after cumulatively curing at not less than 50 degrees F for 24 hours from time of concrete placement if:

1. Concrete is sufficiently hard so as not to sustain damage by form removal operations, and

2. Curing and protection operations are maintained.

**END OF SECTION**

# SECTION 03210
# REINFORCING STEEL

## PART 1 GENERAL

### 1.01 REFERENCES

A. The following is a list of standards which may be referenced in this section:

1. American Concrete Institute (ACI):
   a. 318/318R, Building Code Requirements for Reinforced Concrete and Commentary.
   b. SP-66, Detailing Manual.
2. American Welding Society (AWS): D1.4, Structural Welding Code - Reinforcing Steel.
3. ASTM International (ASTM):
   a. A615/A615M, Standard Specification for Deformed and Plain Billet-Steel Bars for Concrete Reinforcement.
   b. A706/A706M, Standard Specification for Low-Alloy Steel Deformed and Plain Bars for Concrete Reinforcement.
   c. A767/767M, Standard Specification for Zinc-Coated (Galvanized) Steel Bars for Concrete Reinforcement.
4. Concrete Reinforcing Steel Institute (CRSI):
   a. Placing Reinforcing Bars.
   b. Manual of Standard Practice.
5. International Conference of Building Officials (ICBO): ICBO Research Report.

### 1.02 SUBMITTALS

A. Action Submittals:

1. Shop Drawings prepared in accordance with CRSI Manual of Standard Practice and ACI SP-66 Detailing Manual:
   a. Bending lists.
   b. Placing drawings.
2. Welded and mechanical threaded connection.

B. Informational Submittals:

1. Lab test reports for reinforcing steel showing stress-strain curves and ultimate strengths.

2. Mechanical Threaded Connections:
   a. Current International Conference of Building Officials (ICBO) Research Report or equivalent code agency report listing findings to include acceptance, special inspection requirements, and restrictions.
   b. Manufacturer's instructions.
   c. Verification that device threads have been tested and meet requirements for thread quality, in accordance with manufacturer's published methods.
3. Welding Qualification: Prior to welding, submit welder qualifications and nondestructive testing procedures in accordance with Section 05050, Welding.
4. Test results of field testing.

1.03 QUALITY ASSURANCE

A. Welder Qualifications: Certified in accordance with AWS D1.4.

1.04 DELIVERY, STORAGE, AND HANDLING

A. Unload, store, and handle bars in accordance with CRSI publication "Placing Reinforcing Bars."

**PART 2 PRODUCTS**

2.01 MATERIALS

A. Deformed Billet-Steel Reinforcing Bars:

1. Includes stirrups, ties, and spirals.
2. ASTM A615, Grade 60, where welding is not required.
3. ASTM A706/A706M, Grade 60, for reinforcing to be welded.
4. ASTM A767/767M, Grade 60, for galvanized bars.

B. Mechanical Splices and Connections:

1. Mechanical Threaded Connections: Furnish metal coupling sleeve with internal threads engaging threaded ends of bars developing in tension or compression 125 percent of yield strength of bar.
   a. Manufacturers and Products:
      1) Erico Products, Inc., Cleveland, OH; Lenton Reinforcing Steel Couplers.
      2) Richmond Screw Anchor Co., Inc., Fort Worth, TX; Richmond DB-SAE Dowel Bar Splicers.

2.02 ACCESSORIES

A. Tie Wire:

1. Black, soft-annealed 16-gauge wire.
2. Nylon-, epoxy-, or plastic-coated wire.

B. Bar Supports and Spacers:

1. Precast concrete bar supports, cementitious fiber-reinforced bar supports, or all-plastic bar supports and side form spacers meeting requirements of CRSI Manual of Standard Practice. Do not use other types of supports or spacers.
2. In Walls and Slabs Exposed to View After Form Removal: Small rectangular concrete blocks made up of same color and strength as concrete being placed around them or all-plastic bar supports and side form spacers.
3. Precast concrete supports of same strength as concrete for reinforcing in concrete placed on grade.
4. Plastic Bar Supports: As manufactured by Aztec Concrete Accessories, Bloomington, CA.

2.03 FABRICATION

A. Follow CRSI Manual of Standard Practice.

B. Bend bars cold.

**PART 3 EXECUTION**

3.01 PREPARATION

A. Notify Engineer when reinforcing is ready for inspection and allow sufficient time for inspection prior to placing concrete.

B. Clean reinforcing bars of loose mill scale, oil, earth, and other contaminants.

C. Coat wire projecting from precast concrete bar supports with dielectric material, epoxy, or plastic.

3.02 REINFORCING BAR INSTALLATION

A. Bundle or space bars, instead of field bending where construction access through reinforcing is necessary.

B. Spacing and Positioning: Conform to ACI 318/318R.

C. Location Tolerances: In accordance with CRSI publication, "Placing Reinforcing Bars".

D. Splicing:

1. Follow ACI 318/318R.
2. Use lap splices, unless otherwise shown or permitted in writing by Engineer.
3. Welded Splices: Accomplish by full penetration groove welds and develop a minimum of 125 percent of yield strength of bar.
4. Stagger splices in adjacent bars where indicated.

E. Mechanical Splices and Connections:

1. Use only in areas specifically approved in writing by Engineer.
2. Install threaded rods as recommended by manufacturer with threads totally engaged into coupling sleeve and in accordance with ICBO Research Report.
3. Maintain minimum edge distance and concrete cover.

F. Tying Reinforcing Bars:

1. Tie every other intersection on mats made up of Nos. 3, 4, 5, and 6 bars to hold them firmly at required spacing.
2. Bend tie wire away from concrete surface to provide clearance of 1 inch from surface of concrete to tie wire.

G. Reinforcement Around Openings: On each side and above and below pipe or opening, place an equivalent area of steel bars to replace steel bars cut for opening. Extend steel reinforcing a standard lap length beyond opening at each end.

H. Welding Reinforcement:

1. Only A706/A706M bars may be welded.
2. Do not perform welding until welder qualifications are approved.

I. Straightening and Rebending: Field bending of reinforcing steel bars is not permitted.

J. Unless permitted by Engineer, do not cut reinforcing bars in field.

3.03 TESTS AND INSPECTION

A. An independent testing agency shall be retained by the Contractor to visually inspect and test reinforcing steel welds in accordance with AWS D1.4 as specified in Section 05050, Welding.

B. An independent testing agency shall be retained by the Contractor to inspect each mechanical splice and verify each component is installed in accordance with manufacturer's instructions and ICBO Research Report.

C. Special inspection shall be provided by the Contractor as indicated on Drawings. Special Inspectors shall be certified by ICC or ICBO to perform these inspections.

**END OF SECTION**

# SECTION 03215
# DOWELING FOR CONCRETE

## PART 1 GENERAL

### 1.01 REFERENCES

A. The following is a list of standards which may be referenced in this section:

1. American National Standards Institute (ANSI).
2. ASTM International (ASTM):
   a. A193, Standard Specification for Alloy-Steel and Stainless Steel Bolting Materials for High-Temperature Service.
   b. A307, Standard Specification for Carbon Steel Bolts and Studs, 60,000 PSI Tensile Strength.
   c. C881, Standard Specification for Epoxy-Resin-Base Bonding Systems for Concrete.
   d. C882, Standard Test Method for Bond Strength of Epoxy-Resin Systems Used with Concrete by Slant Shear.
   e. D648, Standard Test Method for Deflection Temperature of Plastics Under Flexural Load.
   f. D695, Standard Test Method for Compressive Properties of Rigid Plastics.
3. International Code Council (ICC): International Building Code (IBC).

### 1.02 DEFINITIONS

A. ICBO Legacy Reports: Published by ICC for concrete anchor manufacturers.

B. Special Inspection: Observation of Work by Special Inspector for conformance to approved design Drawings and Specifications.

C. Special Inspector: Qualified person who shall demonstrate competence, to satisfaction of building official, for inspection of Work specified within this section.

### 1.03 SUBMITTALS

A. Action Submittals:

1. Product Data: Manufacturer's catalog information.
2. Samples: Two random Samples of each batch of products delivered to Site, for independent testing.

B. Informational Submittals:

1. Manufacturer's instructions for preparation, placement, drilling of holes, installation of anchors and adhesive, and handling of cartridges, nozzles, and equipment.
2. Manufacturer's qualifications; include client name, address, contact person, phone number, project location, and description of work.
3. Manufacturer's Certificate of Proper Installation.
4. Manufacturer's written letter of certification identifying installer's qualifications to install products.
5. Doweling system manufacturer's ICBO Legacy Reports.
6. Detailed step-by-step instructions for the Special Inspection procedure in accordance with ICBO Legacy Reports and IBC.
7. Special Inspection report.

1.04 QUALITY ASSURANCE

A. Qualifications:

1. Manufacturer: At least three similar projects with same products within the last 3 years.
2. Installer: Trained and certified by manufacturer.

B. Regulatory Requirements: Adhesive shall be acceptable to EPA and health agencies for use in potable water structures.

1.05 DELIVERY, STORAGE, AND HANDLING

A. Store adhesive cartridges and adhesive components on pallets or shelving in a covered storage area.

B. Store at temperatures as indicated in the manufacturer's literature and ICBO Legacy Report.

C. Dispose of When:

1. Shelf life has expired.
2. Stored other than per manufacturer's instructions.

D. Container Markings: Include manufacturer's name, product name, batch number, mix ratio by volume , product expiration date, ANSI hazard classification, and appropriate ANSI handling precautions.

## PART 2 PRODUCTS

### 2.01 ADHESIVE

A. Disposable, self-contained cartridge system capable of dispensing both components in the proper mixing ratio and that fit into manually or pneumatically operated caulking gun.

B. Meet requirements of ASTM C881.

C. Two-component, insensitive to moisture, designed to be installed in adverse freeze/thaw environments.

D. Cure Temperature, Pot Life, and Workability: Compatible for intended use and anticipated environmental conditions.

E. Mixed Adhesive: Nonsag light paste consistency with ability to remain in a 1-inch diameter overhead drilled hole without runout.

F. Manufacturers and Products:

1. ITW Ramset/Red Head, Wood Dale, IL; Epcon Ceramic 6 Epoxy or A7 Acrylic Adhesive Anchor System. (Use only Epcon A7 Acrylic Adhesive System for hollow masonry.)
2. Hilti, Inc., Tulsa, OK; HIT Doweling Anchor System, HIT HY 150 (HIT HY 20 for hollow masonry).
3. Powers Rawl, New Rochelle, NY; Power Fast Epoxy Injection Gel Cartridge System.
4. Simpson Strong-Tie Co., Inc., Pleasanton, CA; Epoxy-Tie Adhesive ET22.
5. Covert Operations, Inc., Long Beach, CA; CIA-Gel 7000 Epoxy Anchors.
6. Unitex, Kansas City, MO; Pro-Poxy 300 and Pro-Poxy 300 Fast Epoxy Adhesive Anchors.

### 2.02 MIXING NOZZLES

A. Disposable, manufactured in several sizes to accommodate size of reinforcing dowels.

B. Nonremovable internal static mixer required to ensure proper blending of components.

2.03 REINFORCING DOWELS

A. As specified in Section 03210, Reinforcing Steel.

B. Smooth Epoxy-Coated Expansion Joint Dowels: As specified in Section 03251, Concrete Joints.

**PART 3 EXECUTION**

3.01 GENERAL

A. Dispensing, Metering, and Mixing Adhesive Components: Use portable, automatic metering and mixing device or machine capable of maintaining prescribed mix ratio within deviation of 5 percent or less, by volume.

B. Install in accordance with manufacturer's recommended instructions.

C. Dispense components through specially designed static mixing nozzle that thoroughly mixes components and places mixed adhesive at base of predrilled hole.

3.02 DOWEL SIZING AND INSTALLATION

A. Install per adhesive manufacturer's instructions.

B. Drilling Equipment:

1. Drilling Hammers for Dowel Holes: Electric or pneumatic rotary type with medium or light impact.
2. Hollow drills with flushing air systems are preferred.
3. Where edge distances are less than 2 inches, use lighter impact equipment to prevent microcracking and concrete spalling during drilling process.

C. Hole Diameter: Use drill bit diameter meeting ICBO Report requirements and as recommended by the manufacturer.

D. Obstructions in Drill Path:

1. When existing reinforcing steel is encountered during drilling and when approved by Engineer, enlarge hole by 1/8 inch, core through existing reinforcing steel at the larger diameter, and resume drilling at original hole diameter; or redrill hole 1 inch from original location, beginning in same line at surface, redirecting drill to miss reinforcing steel.
2. Place dowels in both the misdrilled hole and the new one.

3. When using epoxy anchors, dowels may be prebent prior to installation to 15 degrees to align with other bars. Do not heat dowels to bend.
4. If bars have fused epoxy coating and coating is damaged, recoat damaged area with epoxy.
5. Bent Bar Dowels: Where edge distances are critical, and striking reinforcing steel is likely, drill hole at 10-degree angle or less and use prebent reinforcing bars.

## 3.03 FIELD QUALITY CONTROL

A. Testing of Automatic Metering And Mixing Devices:

1. Test for Proper Ratio:
   a. Retain small amount of dispensed adhesive for inspection after each time pump is refilled.
   b. Check these Samples for color change.
   c. Should change in color occur, follow manufacturer's service instructions to obtain proper operation.
2. Frequency of Tests: Make full ratio check after each 100 gallons of adhesive is dispensed or if color of mixed adhesive becomes noticeably darker or lighter.
3. Ratio Check Procedure:
   a. Disconnect dispensing head behind ON/OFF valve.
   b. Place volume containers of required proportions under "B" and "A" component hose ends.
   c. Actuate pump.
   d. Both cups should fill in an equal time to proper volume, thereby verifying proportion ratio by volume.

B. Dowel Testing:

1. Test dowels at one per every 10 dowels.
2. Dowels shall be tested to specified yield strength of reinforcing bar.
3. Testing apparatus shall not interfere with development of concrete failure cone at dowel.
4. Testing shall occur only after adhesive has achieved proper cure per manufacturer's requirements.
5. Failure of reinforcing bar or of base concrete will cause dowel to be rejected. For each rejected dowel, an additional dowel shall be tested. Rejected dowels shall be replaced with a new dowel in sound concrete and retested.
6. If yield strength of reinforcing bar can not be achieved when tested, manufacturer's representative shall recommend revised installation

procedures or adhesive products. Modified installations must be tested at same frequency as specified herein.

C. Special Inspection:

1. Special Inspector shall be certified by ICC or ICBO for this type of work.
2. Special Inspector shall be onsite during dowel installation.
3. Special Inspector shall observe installation and shall submit report containing the following:
   a. Drill bit compliance.
   b. Hole depth and cleanliness.
   c. Product Description: Product name, rod diameter and length.
   d. Adhesive expiration date.
   e. Verification of dowel installation in accordance with manufacturer's published instructions.
   f. ICBO Legacy Evaluation Reports.

D. Manufacturer's Field Services: Provide manufacturer's representative at Site in accordance with Section 01640, Manufacturers' Services, for installation assistance, inspection, and certification of proper installation.

**END OF SECTION**

# SECTION 03251
# CONCRETE JOINTS

## PART 1 GENERAL

### 1.01 REFERENCES

A. The following is a list of standards which may be referenced in this section:

1. ASTM International (ASTM):
   a. A240/A240M, Specification for Heat-Resisting Chromium and Chromium-Nickel Stainless Steel Plate, Sheet, and Strip for Pressure Vessels.
   b. A615/A615M, Specification for Deformed and Plain Billet-Steel Bars for Concrete Reinforcement.
   c. A767/767M, Specification for Zinc-Coated (Galvanized) Steel Bars for Concrete Reinforcement.
   d. B852, Specification for Zinc Alloys (CGG) for Continuous Hot-Dip Galvanizing of Sheet Steel.
   e. D226, Specification for Asphalt-Saturated Organic Felt Used in Roofing and Waterproofing.
   f. D227, Specification for Coal-Tar Saturated Organic Felt Used in Roofing and Waterproofing.
   g. D994, Specification for Preformed Expansion Joint Filler for Concrete (Bituminous Type).
   h. D1056, Specification for Flexible Cellular Materials—Sponge or Expanded Rubber.
   i. D1751, Specification for Preformed Expansion Joint Filler for Concrete Paving and Structural Construction (Nonextruding and Resilient Bituminous Types).
2. NSF International (NSF): 61, Drinking Water System Components - Health Effects.

### 1.02 SUBMITTALS

A. Action Submittals:

1. Shop Drawings:
   a. Water Stops: Details of splices, method of securing and supporting water stop in forms to maintain proper orientation and location during concrete placement.
   b. Construction and Control Joints: Layout and location for each type.

2. Samples: TPER water stop splice, joint, and fabricated cross of each size, shape, and fitting of water stop(s).

B. Informational Submittals:

1. Joint Seal for Structures: Copy of applicable NSF listing.
2. Manufacturer's written instructions for product shipment, storage, handling, installation/application, and repair for water stop, joint seal, and bonding agent.

1.03 QUALITY ASSURANCE

A. Regulatory Requirements: Acceptance of joint seal for potable water structures by federal EPA or by a state health agency.

1. Joint Seal: Certified as meeting NSF 61.

1.04 DELIVERY, STORAGE, AND HANDLING

A. Acceptance at Site: Verify that delivered materials are in accordance with Specifications and manufacturer's product data sheets prior to unloading and storing onsite.

B. Storage: Store materials under tarps to protect from oil, dirt, and sunlight.

**PART 2 PRODUCTS**

2.01 STAINLESS STEEL WATER STOPS

A. ASTM A240/240M, AISI Type 316, 16-gauge sheet metal, 6 inches wide, unless otherwise shown, with stainless steel self-tapping sheet metal screws for securing 12-inch laps.

2.02 THERMOPLASTIC ELASTOMERIC RUBBER WATER STOP (TPER)

A. Extruded from thermoplastic elastomeric rubber compound. Compound shall not contain scrapped material, reclaimed material, or pigment.

B. Shore Durometer Type A Hardness: Approximately 85.

C. Ozone Resistance: Per ASTM D1171, must pass at 450 pphm.

D. Type: 6 or 9 inches long with center bulb with parallel ribs or protrusions on each side of strip center, as indicated on Drawings.

E. Thickness: Constant from bulb edge to outside stop edge.

F. Manufacturer and Product: Westec Barrier Technologies, St. Louis, MO; TPE-R, No. 619C and No. 620C.

2.03 BOND BREAKER

A. Tape for Joints: Adhesive-backed glazed butyl or polyethylene tape, same width as joint, that will adhere to premolded joint material or concrete surface.

B. Use either bond breaker tape or bond prevention material as specified in Section 03300, Cast-in-Place Concrete, except where tape is specifically called for.

2.04 PREMOLDED JOINT FILLER

A. Bituminous Type: ASTM D994 or D1751.

2.05 JOINT SEALS

A. Joint Seal for Water Containment Structures:

1. Meet requirements of NSF 61.
2. Resilient, non-extrudable, impermeable closed-cell material for level, sloping, or vertical joints.
3. Color: Gray.
4. Manufacturers and Products:
   a. E-Poxy Engineered Materials, LLC, Albany, NY; Evazote 50 ESP with EVA-POX bonding agent.
   b. No "or-equal" or substitute products will be considered.

2.06 ACCESSORIES

A. Joint Sealants and Caulking: As specified in Section 07900, Joint Sealants.

B. Nonshrink Grout: As specified in Section 03600, Grout.

C. Roofing Felt: ASTM D226, Type II, 30-pound asphalt-saturated or equal weight of ASTM D227 coal-tar saturated felt.

D. Reinforcing Steel: As specified in Section 03210, Reinforcing Steel.

E. Nails: Galvanized, as required for securing premolded joint filler.

F. Galvanized Rebar at Control Joints: ASTM A767/767M and A615/A615M Grade 60 prior to galvanizing.

## PART 3 EXECUTION

### 3.01 GENERAL

A. Commence concrete placement after joint preparation is complete.

B. Time Between Concrete Pours: As specified in Section 03300, Cast-In-Place Concrete.

### 3.02 SURFACE PREPARATION

A. Construction Joints: Prior to placement of abutting concrete, clean contact surface:

1. Remove laitance and spillage from reinforcing steel and dowels.
2. Roughen surface to minimum of 1/4-inch amplitude:
   a. Sandblast after concrete has fully cured.
   b. Water blast after concrete has partially cured.
   c. Green cut fresh concrete with high pressure water and hand tools.
3. Perform cleaning so as not to damage water stop, if one is present.

B. Control Joint:

1. Concrete surface must be smooth, clean, and dry. Clean debris, dirt, dust, and foreign material from concrete surface.
2. Grind concrete as required.

### 3.03 INSTALLATION OF WATER STOPS

A. General:

1. Continuous water stop (as specified) shall be installed in all construction joints in walls and slabs, unless specifically noted otherwise.
2. Join water stops at intersections to provide continuous seal.
3. Center water stop on joint.
4. Secure water stop in correct position. Do not displace water stop during concrete placement.
5. Repair or replace damaged water stop.
6. Place concrete and vibrate to obtain impervious concrete in vicinity of joints.
7. Joints in Footings and Slabs: Ensure that space beneath water stop is completely filled with concrete.

B. Stainless Steel Water Stops:

1. Install in construction joints unless otherwise shown.
2. Place water stops in wall construction joints by tamping into place immediately after concrete placement is completed and before concrete has begun to set.
   a. Puddle each side to level concrete and assure that water stop is properly embedded.
3. Place water stop in other joints and secure in forms prior to placing concrete.
4. Where metal water stops are spliced, lap at least 12 inches, caulk with Type 5 as specified in Section 07900, Joint Sealants, and secure together with stainless steel sheet metal screws.
5. After concrete around water stops has set to the point where surface can be cut with broom or stream of water, cut off surface to rough finish, minimum roughness of 1/4-inch amplitude, with all laitance removed and concrete left clean.

C. TPER Water Stop:

1. Install in accordance with manufacturer's written instructions.
2. Splice in accordance with water stop manufacturer's written instructions using Teflon-coated thermostatically controlled heating iron at approximately 380 degrees F.
   a. Allow at least 10 minutes before new splice is pulled or strained in any way.
   b. Finished splices shall provide cross section that is dense and free of porosity with tensile strength of not less than 80 percent of unspliced materials.
   c. Use only factory made water stop fabrications for all intersections, changes of directions and transitions.
   d. Field splice permitted only for straight butt welds.

## 3.04 CONTROL JOINT INSTALLATION

A. Premolded Joint Filler:

1. Sufficient in width to completely fill joint space where shown.
2. If water stop is in joint, cut premolded joint filler to butt tightly against water stop and concrete face.
3. Precut premolded joint filler to required depth at locations where joint seal is to be applied.
4. Form cavities for joint seal with either precut, premolded joint filler, or smooth removable accurately shaped material.

5. Vibrate concrete thoroughly along joint form to produce dense, smooth surface.

B. Bituminous Type Premolded Joint Filler:

1. Drive nails approximately 1 foot 6 inches on center through filler, prior to installing, to provide anchorage embedment into concrete during concrete placement.
2. Secure premolded joint filler in forms before concrete is placed.
3. Install in walkways, at changes in direction, at intersections, at each side of driveway entrances, and at 45-foot intervals, maximum.

C. Joint Seal:

1. General: Install in accordance with the manufacturer's written instructions, except as specified: Apply primer prior to installing joint filler.

**END OF SECTION**

# SECTION 03300
# CAST-IN-PLACE CONCRETE

## PART 1 GENERAL

### 1.01 REFERENCES

A. The following is a list of standards which may be referenced in this section:

1. American Concrete Institute (ACI):
   a. 117, Standard Specification for Tolerances for Concrete Construction and Materials.
   b. 211.1, Standard Practice for Selecting Proportions for Normal, Heavyweight, and Mass Concrete.
   c. 301, Standard Specification for Structural Concrete.
   d. 302.1R, Guide For Concrete Floor and Slab Construction.
   e. 304R, Guide for Measuring, Mixing, Transporting, and Placing Concrete.
   f. 304.2R, Placing Concrete by Pumping Methods.
   g. 305R, Hot Weather Concreting.
   h. 306.1, Standard Specification for Cold Weather Concreting.
   i. 309R, Guide for Consolidation of Concrete.
   j. 318/318R, Building Code Requirements for Structural Concrete.
   k. SP-15, Standard Specification for Structural Concrete.
2. ASTM International (ASTM):
   a. C31, Standard Practice for Making and Curing Concrete Test Specimens in the Field.
   b. C33, Standard Specification for Concrete Aggregates.
   c. C39, Standard Test Method for Compressive Strength of Cylindrical Concrete Specimens.
   d. C78, Standard Test Method for Flexural Strength of Concrete (Using Simple Beam with Third-Point Loading).
   e. C88, Standard Test Method for Soundness of Aggregates by Use of Sodium Sulfate or Magnesium Sulfate.
   f. C94, Standard Specification for Ready-Mixed Concrete.
   g. C140, Standard Test Methods for Sampling and Testing Concrete Masonry Units and Related Units.
   h. C143, Standard Test Method for Slump of Hydraulic-Cement Concrete.
   i. C150, Standard Specification for Portland Cement.
   j. C157, Standard Test Method for Length Change of Hardened Hydraulic-Cement Mortar and Concrete.

k. C192, Standard Practice for Making and Curing Concrete Test Specimens in the Laboratory.
l. C231, Standard Test Method for Air Content of Freshly Mixed Concrete by the Pressure Method.
m. C260, Standard Specification for Air-Entraining Admixtures for Concrete.
n. C279, Standard Specification for Chemical-Resistant Masonry Units.
o. C311, Standard Test Methods for Sampling and Testing Fly Ash or Natural Pozzolans for Use as a Mineral Admixture in Portland-Cement Concrete.
p. C452, Standard Test Method for Potential Expansion of Portland-Cement Mortars Exposed to Sulfate.
q. C494, Standard Specification for Chemical Admixtures for Concrete.
r. C595, Standard Specification for Blended Hydraulic Cements.
s. C618, Standard Specification for Coal Fly Ash and Raw or Calcined Natural Pozzolan for Use as a Mineral Admixture in Concrete.
t. C666, Standard Test Method for Resistance of Concrete to Rapid Freezing and Thawing.
u. C1012, Standard Test Method for Length Change of Hydraulic-Cement Mortars Exposed to a Sulfate Solution.
v. C1018, Standard Test Method for Flexural Toughness and First-Crack Strength of Fiber-Reinforced Concrete (Using Beam with Third-Point Loading).
w. C1116, Standard Specification for Fiber-Reinforced Concrete and Shotcrete
x. C1218 Standard Test Method for Water-Soluble Chloride in Mortar and Concrete
y. C1240, Standard Specification for Silica Fume for Use as a Mineral Admixture in Hydraulic-Cement Concrete, Mortar, and Grout.
z. D2000, Standard Classification System for Rubber Products in Automotive Applications.
aa. D4580, Standard Practice for Measuring Delaminations in Concrete Bridge Decks by Sounding.
bb. E329, Standard Specification for Agencies Engaged in the Testing and/or Inspection of Materials Used in Construction.

3. National Bureau of Standards: Handbook No. 44, Specifications, Tolerances, and Other Technical Requirements for Commercial Weighing and Measuring Devices.

## 1.02 DEFINITIONS

A. Defective Areas: Surface defects that include honeycomb, rock pockets, indentations greater than 3/16 inch, cracks 0.005 inch wide and larger as well as any crack that leaks for liquid containment basins and belowgrade habitable spaces; cracks 0.010 inch wide and larger in nonfluid holding structures, spalls, chips, air bubbles greater than 3/4 inch in diameter, pinholes, bug holes, embedded debris, lift lines, sand lines, bleed lines, leakage from form joints, fins and other projections, form popouts, texture irregularities, and stains and other color variations that cannot be removed by cleaning.

B. Exposed Concrete: Concrete surfaces that can be seen inside or outside of structures regardless whether concrete is above water, dry at all times, or can be seen when structure is drained.

C. Hydraulic Structures: Liquid containment basins.

D. New Concrete: Less than 60 days old.

E. Slurry Concrete: Mixture of sand, 3/8-inch minus aggregate, cement, and water for wall construction joints.

## 1.03 SUBMITTALS

A. Action Submittals:

1. Shop Drawings:
   a. Product Data:
      1) Admixtures, bonding agent, bond breaker, and patching materials.
      2) Precast trench drain system catalog information and catalog cuts.
      3) Precast trench drain system manufacturer's installation instructions.
   b. Design Data: Concrete mix designs signed by qualified mix designer.
   c. Placement Drawings:
      1) Concrete, identifying location of each type of construction joint.
      2) Shop Drawings showing layout of entire precast trench drain system, designating component parts and accessories.
   d. Gradation for coarse and fine aggregates, and combined together. List gradings, percent passing through each sieve size.
   e. Detailed plan for cold weather curing and protection of concrete placed and cured in weather below 40 degrees F.

f. Detailed plan for hot weather placements including curing and protection for concrete placed in ambient temperatures over 80 degrees F.
g. Concrete repair methods and materials.

B. Informational Submittals:

1. Preinstallation Conference minutes.
2. Manufacturer's application instructions for bonding agent and bond breaker.
3. Manufacturers' Certificate of Compliance:
   a. Portland cement.
   b. Admixtures.
   c. Fly ash.
   d. Aggregates.
   e. Bonding agent.
   f. Bond breaker.
   g. Patching materials.
   h. Admixtures: Manufacturers' Certificate of Proper Installation.
4. Statements of Qualification:
   a. Mix designer.
   b. Batch plant.
5. Test Reports:
   a. Admixtures, test reports showing chemical ingredients and percentage of chloride in each admixture and fly ash.
   b. Source test analysis report for fly ash, including percentage of chloride content.
   c. Statement identifying aggregates reactivity. Determine water soluble chloride in each component of aggregates in accordance with ASTM C1218.
   d. For each trial concrete mix design and signed by a qualified mix designer.
   e. Cylinder compressive test results for laboratory concrete mixes.
   f. Field tests for slump and air content of production concrete.
   g. Cylinder compressive test results for production concrete.
6. Concrete Delivery Tickets:
   a. For each batch of concrete before unloading at Site.
   b. Record of drum revolution counter, type, brand, test certification, Amount of fly ash if used in accordance with ASTM C94, Section 16.

## 1.04 QUALITY ASSURANCE

A. Qualifications:

1. Mix Designer: Licensed professional engineer registered in the State of Project or state DOT approved mix designer in the State of Project.
2. Batch Plant: Currently certified by the National Ready Mixed Concrete Association.
3. Independent testing laboratory.

B. Preinstallation Conference:

1. Required Meeting Attendees:
   a. Contractor, including pumping, placing and finishing, and curing subcontractors and independent testing laboratory retained by Contractor.
   b. Ready-mix producer.
   c. Admixture representative.
   d. Engineer.
2. Schedule and conduct prior to incorporation of respective products into Project. Notify Engineer of location and time.
3. Agenda shall include:
   a. Admixture types, dosage, performance, and redosing at Site.
   b. Mix designs, test of mixes, and Submittals.
   c. Placement methods, techniques, equipment, consolidation, and form pressures.
   d. Slump and placement time to maintain slump.
   e. Finish, curing, and water retention.
   f. Protection procedures for weather conditions.
   g. Other specified requirements requiring coordination.
4. Conference minutes.

# PART 2 PRODUCTS

## 2.01 MATERIALS

A. Cement: Furnish from one source.

1. Portland Cement Type I or Type II:
   a. Meet ASTM C150.
   b. Alkalies: Maximum 0.60 percent.
   c. Tricalcium Aluminate Content of Type I Cement: Maximum 12 percent.
   d. Nonhydraulic Abovegrade Structures: Type I or Type II cement.

e. Hydraulic and Belowgrade Structures and Sewers: Type II cement or combination of Type I mixed with fly ash.
f. Combine fly ash with cement at batch plant or during production of cement in accordance with ASTM C595, Type IP cement.

B. Aggregates: Furnish from one source.

1. Natural Aggregates:
   a. Free from deleterious coatings and substances in accordance with ASTM C33, except as modified herein.
   b. Free of materials and aggregate types causing popouts, discoloration, staining, or other defects on surface of concrete.
2. Nonpotentially Reactive: In accordance with ASTM C33, Appendix XI, Paragraph X1.1.
3. Aggregate Soundness: Test for fine and coarse aggregates in accordance with ASTM C33 and ASTM C88 using sodium sulfate solution.
4. Fine Aggregates:
   a. Clean, sharp, natural sand.
   b. ASTM C33.
   c. Materials Passing 200 Sieve: 4 percent maximum.
   d. Limit deleterious substances in accordance with ASTM C33, Table 1 with material finer than 200 sieve limited to 3 percent, coal and lignite limited to 0.5 percent.
5. Coarse Aggregate:
   a. Natural gravels, combination of gravels and crushed gravels, crushed stone, or combination of these materials containing no more than 15 percent flat or elongated particles (long dimension more than five times the short dimension).
   b. Materials Passing 200 Sieve: 0.5 percent maximum.
   c. Limit deleterious substances in accordance with ASTM C33, Table 3 for exposed concrete.

C. Admixtures: Furnish from one manufacturer.

1. Characteristics: Compatible with each other and free of chlorides or other corrosive chemicals.
2. Air-Entraining Admixture:
   a. ASTM C260, nontoxic after 30 days and contains no chlorides.
   b. Concrete with air-entrainment admixture added shall maintain air percentage as batched, within plus or minus 2 percent for time required for placement into structure.

3. Water-Reducing Admixture: ASTM C494, Type A or Type D.
   a. Manufacturers and Products:
      1) Master Builders, Inc., Cleveland, OH; Pozzolith or Polyheed.
      2) W. R. Grace & Co., Cambridge, MA; WRDA with HYCOL.
      3) Euclid Chemical Co., Cleveland, OH; Eucon WR-91.
4. High Range Water Reducing Admixture (Superplasticizer):
   a. ASTM C494.
   b. Hold slump of 5 inches or greater for time required for placement.
   c. Furnish type as recommended by manufacturer for allowed temperature ranges.
   d. Type F or G.
   e. Manufacturers and Products:
      1) Master Builders, Inc., Cleveland, OH; Rheobuild or Polyheed at dosage greater than 10 ounces per 100 pounds of cement.
      2) W. R. Grace & Co., Cambridge, MA; Daracem 100.
      3) Euclid Chemical Co., Cleveland, OH; Eucon 537.
      4) No "or-equal" or substitute products will be considered.
5. Pozzolan (Fly Ash): Class C or Class F fly ash in accordance with ASTM C618, Table 1 and 2, except as modified herein:
   a. Shall not be produced from process that has utilized hazardous or potentially hazardous materials.
   b. Loss on Ignition: Maximum 3 percent.
   c. Water Requirement: Maximum 100 percent of control.
   d. $\frac{CaO(\%) - 5}{FE_2O_3(\%)}$: $Maximum\ 1.5$
   e. ASTM C618, Table 1A shall apply when aggregate or portion of coarse or fine aggregate used is reactive as specified in Paragraph Nonpotentially Reactive.
   f. ASTM C618, Table 2A, Reactivity with Cement Alkalies, apply when aggregate or portions of aggregate is reactive as specified under Paragraph Nonpotentially Reactive.
   g. ASTM C618, Table 2A, Uniformity Requirements, apply when loss on ignition of fly ash furnished exceeds 3 percent.
6. Fly Ash: Maximum 25 percent, minimum 15 percent of total weight of fly ash plus cement.
7. For fly ash not meeting requirements of chemical ratio listed above, furnish the following:
   a. Test fly ash in accordance with ASTM C1012.
   b. Furnish test data confirming fly ash in combination with cement used meets strength requirements, is compatible with

air-entraining agents and other additives, and provides increased sulfate resistance equivalent to or better than Type II cement.

c. Conduct tests using proposed fly ash and cement samples together with control samples using Type II cement without fly ash.

D. Water: Clean and potable containing less than 500 ppm of chlorides.

2.02 SLURRY CONCRETE FOR HORIZONTAL CONSTRUCTION JOINTS IN WALLS

A. Flowable, consisting of sand, 3/8-inch minus aggregate, water, and minimum 1,128 pounds of cement per cubic yard.

2.03 PRECAST TRENCH DRAIN SYSTEM

A. Design and Fabrication: Meet minimum dimensional requirements as shown or as specified.

B. Trench Drain Channels:

1. Precast polymer concrete channels with a top outside width of 6.1 inches, an inside width of 4.0 inches, radiused bottom inverts with 0.6 percent slope in approximately 39-inch lengths, with interlocking tongue-and-groove butt joint connection, and four horizontal anchoring ribs to key with enclosing materials.
2. Formed from high-strength, durable vinylester polymer concrete, meeting or exceeding the following requirements:

| Property | ASTM Designation | Polymer Concrete |
|---|---|---|
| Compressive Strength | C39-84 | 14,000 psi |
| Tensile Strength | C78-84 | 1,500 psi |
| Freeze Thaw | C666-84 | 1,700 cycles (no weight loss) |
| Chemical Resistance | C279-79 | Resistant to most acids and alkali |
| Absorption of Moisture | C140-75 | Less than 0.2 (surface wetting only) |

C. Gratings: Heavy-duty slotted stainless steel designed for H-20 traffic loads and pneumatic tire fork lifts.

D. Installation Chairs: Fixed channel system support to hold units in place during placement of encasing materials.

E. Sealant: As recommended by manufacturer to seal joints between accessories and units.

F. Grating Locking Devices: Manufacturer's standard stainless steel units.

G. Outlets and End Plates: Manufacturer's standard units to interlock into channels. Trench drain manufacturer shall obtain a male section of 9-inch FRP pipe from Contractor for installing outlet in trench bottom at low points as shown in Drawings.

H. Manufacturers:

1. ABT, Inc., Troutman, NC; PolyDrain, Inc., PolyChampion Products.
2. ACO Polymer Products, Inc., Chastin Falls, OH; Channel Slope.
3. Alpine Summit Enterprises, Inc., Kirkland, WA; Polycast Trench Drains.

## 2.04 ANCILLARY MATERIALS

A. Crack Repair Epoxy Manufacturers: As specified in Section 03740, Concrete Repair Crack Injection.

B. Bonding Agent:

1. Furnish two-component epoxy.
2. Consult manufacturer for surface finish, pot life, set time, vertical or horizontal application, and forming restrictions.
3. Manufacturers and Products:
   a. Chemrex, Inc., Shakopee, MN; Concresive.
   b. Sika Chemical Corp., Lyndhurst, NJ; Sikadur 32.
   c. Euclid Chemical Co., Cleveland, OH; Euco Epoxy System.
   d. Contech Services, Inc., Seattle, WA.

C. Bond Breaker:

1. Nonstaining type, providing positive bond prevention.
2. Manufacturers and Products:
   a. Williams Distributors, Inc., Seattle, WA; Williams Tilt-Up Compound.
   b. SCA Construction Supply Div., Superior Concrete Accessories, Franklin Park, IL; Silcoseal 77.

c. Burke Co., San Mateo, CA; Burke Clean Lift Bond Breaker or Burke Tilt Free Bond Breaker.

D. Repair Material:

1. Contain no chlorides or other chemicals causing steel corrosion.
2. Repair mortar specifically mixed and then tested at Job Site for appearance compatibility prior to use in exposed areas.
3. Low pressure spray or hand applied silica fume mortar, for vertical and overhead repair, as specified in Section 03720, Vertical and Overhead Concrete Surface Repair Systems.
4. Repair mortar system submitted and approved for horizontal concrete surface repairs from list of repair mortars in Section 03722, Horizontal Concrete Surface Repair Systems.
5. Crack repair material as specified in Section 03740, Concrete Repair Crack Injection.

## 2.05 CONCRETE MIX DESIGN

A. Design: Select and proportion ingredients using trial batches; sample, cure and test concrete mix through approved independent testing laboratory in accordance with ACI 211.1.

1. Concrete Compressive Strength, F'c:
   a. 4,000 psi at 28 days, unless otherwise shown, except 3,000 psi at 28 days for secondary concrete elements such as curbs, sidewalks, and pipe/conduit encasements.
   b. Design lab-cured trial mix cylinders.
   c. Use additional cement or cement plus fly ash above minimum specified if required to meet average compressive strength, F'cr.
   d. Use F'cr as basis for selection of concrete proportions as set forth in ACI 301.
   e. F'cr: Equal to F'c plus 1,200 when data are not available to establish standard deviation.
2. Concrete Fill:
   a. Design for 2,500 psi at 28 days using 1-inch aggregate, 4-inch maximum slump and 0.46 maximum water-cement ratio.
   b. Use water-reducing admixture.

B. Proportions:

1. Design mix to meet aesthetic and structural concrete requirements.
2. In accordance with ACI 211.1, unless specified otherwise.

3. Unless specifically stated otherwise, water-cement ratio (or water-cement plus fly ash ratio) shall control amount of total water added to concrete as follows:

| Water-Cement Ratio | | |
|---|---|---|
| **Coarse Aggregate Size** | **Maximum W/C Ratio w/ Superplasticizer** | **Maximum W/C Ratio w/o Superplasticizer** |
| 1-1/2" | 0.40 | 0.44 |
| 1" | 0.385 | 0.43 |
| 3/4" | 0.375 | 0.42 |

4. Minimum Cement Content (or Combined Cement Plus Fly Ash Content When Fly Ash is Used):
   a. 517 pounds per cubic yard for concrete with 1-1/2-inch maximum size aggregate.
   b. 540 pounds per cubic yard for 1-inch maximum size aggregate.
   c. 564 pounds per cubic yard for 3/4-inch maximum size aggregate.
   d. Increase cement content or combined cement plus fly ash content, as required to meet strength requirements and water-cement ratio.

C. Admixtures:

1. Air Content: 4 to 6 percent when tested in accordance with ASTM C231; 3 percent maximum for interior slabs where heavy-duty concrete floor finish is required.
2. Fly Ash: Maximum 25 percent, minimum 15 percent of total weight of fly ash plus cement.
3. Water Reducers: Use in all concrete.
4. High Range Water Reducers (Superplastizicers): Use in wall concrete Use at Contractor's option in slab concrete. Control slump and workability to at least 4-1/2-inch slump at discharge into forms by adjusting high range water reducer at batch plant.

D. Slump Range at Site:

1. 4-1/2 inches minimum, 8 inches maximum for concrete with a high range water reducing admixture.
2. 3 inches minimum and 5 inches maximum for concrete without high range water reducing admixture.

E. Combined Aggregate Gradation:

1. Structures: Select one of the gradations shown in the following table.
2. Combined Gradation Limits: Limits shown are for coarse aggregates and fine aggregates mixed together (combined).

| Sieve Sizes | Combined Gradation Percentage Passing | | |
|---|---|---|---|
| | **1-1/2" Max.** | **1" Max.** | **3/4" Max.** |
| 2" | - 100 | - | - |
| 1-1/2" | 95 - 100 | - 100 | - |
| 1" | 65 - 85 | 90 - 100 | - 100 |
| 3/4" | 55 - 75 | 70 - 90 | 92 – 100 |
| 1/2" | - | | 68 – 86 |
| 3/8" | 40 - 55 | 45 - 65 | 57 – 74 |
| No. 4 | 30 - 45 | 31 - 47 | 38 – 57 |
| No. 8 | 23 - 38 | 23 - 40 | 28 – 46 |
| No. 16 | 16 - 30 | 17 - 35 | 20 – 36 |
| No. 30 | 10 - 20 | 10 - 23 | 14 – 25 |
| No. 50 | 4 - 10 | 2 - 10 | 5 – 14 |
| No. 100 | 0 - 3 | 0 - 3 | 0 – 5 |
| No. 200 | 0 - 2 | 0 - 2 | 0 – 2 |

2.06 CONCRETE MIXING

A. General: In accordance with ACI 304R.

B. Concrete Mix Temperatures: As shown below for various stages of mixing and placing:

| Concrete Temperatures | | | | |
|---|---|---|---|---|
| | Concrete Member Size, Minimum Dimension | | | |
| **Ambient Air Temp.** | **<12"** | **12"-36"** | **36"-72"** | **>72"** |
| Minimum concrete temperature as mixed for indicated air temperature: | | | | |
| Above 30 deg. F | 60 deg. F | 55 deg. F | 50 deg. F | 45 deg. F |

| Concrete Temperatures | | | | |
|---|---|---|---|---|
| | Concrete Member Size, Minimum Dimension | | | |
| **Ambient Air Temp.** | **<12"** | **12"-36"** | **36"-72"** | **>72"** |
| 0 to 30 deg. F | 65 deg. F | 60 deg. F | 55 deg. F | 50 deg. F |
| Below 0 deg. F | 70 deg. F | 65 deg. F | 60 deg. F | 55 deg. F |
| Maximum allowable gradual temperature drop in first 24 hours after curing period and after end of protection: | | | | |
| – | 50 deg. F | 40 deg. F | 30 deg. F | 20 deg. F |

C. Truck Mixers:

1. Equip with electrically actuated counters to readily verify number of revolutions of drum or blades.
2. Counter:
   a. Resettable, recording type, mounted in driver's cab.
   b. Actuated at time of starting mixers at mixing speeds.
3. Truck mixer operation shall furnish concrete batch as discharged that is homogeneous with respect to consistency, mix, and grading.
4. If slump tests taken at approximately 1/4 and 3/4 points of load during discharge give slumps differing by more than 2 inches when specified, slump is more than 4 inches, discontinue use of truck mixer unless causing condition is corrected and satisfactory performance is verified by additional slump tests.
5. Before attempting to reuse unit, check mechanical details of mixer, such as water measuring, and discharge apparatus, condition of blades, speed of rotation, general mechanical condition of unit, admixture dispensing equipment, and clearance of drum.
6. Do not use nonagitating or combination truck and trailer equipment for transporting ready-mixed concrete.
7. Concrete Volume in Truck:
   a. Limit to 63 percent of total volume capacity in accordance with ASTM C94 when truck mixed.
   b. Limit to 80 percent of total volume capacity when central mixed.
8. Mix each batch of concrete in truck mixer for minimum 70 revolutions of drum or blades at rate of rotation designated by equipment manufacturer.
9. Perform additional mixing, if required, at speed designated by equipment manufacturer as agitating speed.
10. Place materials, including mixing water, in mixer drum before actuating revolution counter for determining number of mixing revolutions.

D. Aggregates: Thoroughly and uniformly wash before use.

E. Admixtures:

1. Air-Entraining Admixture: Add at plant through manufacturer-approved dispensing equipment.
2. Water Reducers: Add prior to addition of high range water reducing admixture (superplasticizers).
3. High range water reducing admixture (superplasticizers) and Air-Entraining Admixtures:
   a. Add at concrete plant only through equipment furnished or approved by admixture manufacturer.
   b. Accomplish variations in slump, working time, and air content for flowable mixes by increasing or reducing high range water reducing admixture (superplasticizers) dose or air-entraining admixture dose at ready-mix plant only.
   c. Equipment shall provide for easy and quick visual verification of admixture amount used for each dose.
   d. Add discharge amount to each load of concrete into separate dispensing container, verify amount is correct, and add to concrete.
   e. Additional dosage of high range water reducing admixture (superplasticizers) may be added in field using manufacturer-approved dispensing when unexpected delays cause too great of slump loss.

## 2.07 SOURCE QUALITY CONTROL

A. Cement: Test for total chloride content.

B. Fly Ash: Test in accordance with ASTM C311.

C. Batch Plant Inspection: Engineer shall have access to and have right to inspect batch plants, cement mills, and supply facilities of suppliers, manufacturers, and Subcontractors, providing products included in these Specifications.

1. Weighing Scales: Tested and certified within tolerances set forth in the National Bureau of Standards Handbook No. 44.
2. Batch Plant Equipment: Either semiautomatic or fully automatic in accordance with ASTM C94.

## PART 3 EXECUTION

### 3.01 PLACING CONCRETE

A. Preparation: Meet requirements and recommendations of ACI 304R and ACI 301, except as modified herein.

B. Inspection: Notify Engineer at least 1 full working day in advance before starting to place concrete.

C. Precast Trench Drain System:

1. Verify that trench excavation is complete and free of debris and loose materials.
2. Install trench drains and accessories in accordance with manufacturer's instructions.
3. Set trench drain units to line and level, rigidly support each unit with chairs.
4. Roughen abutting surfaces of channel units and accessories by sanding or lightly wire brushing in preparation for sealing; seal abutting surfaces.
5. Monitor placement of concrete to assure that drain units are maintained in place, and that extraneous material does not enter units.
6. Do not vary top of grates from grade line more than 1/8-inch when checked with a 10-foot straightedge.
7. Do not vary alignment of straight sections more than 1/8 inch in 10 feet.

D. Discharge Time:

1. As determined by set time, do not exceed 1-1/2 hours after adding cement to water unless special approved time delay admixtures are used. Coordinate time delay admixture information with manufacturer and Engineer prior to placing concrete.
2. Adjust slump or air content at Site by adding admixtures for particular load when approved by Engineer. Then, adjust plant dosage for remainder of placement. Additional dosage at Site shall be through approved dispenser supplied by admixture manufacturer.
3. Maintain required slump throughout time of concrete placement and consolidation. Discontinue use of high range water reducing admixture (superplasticizers) and provide new mix design if it fails to maintain slump between 4 to 8 inches and produce good consolidation for the length of time required. Redesign mix adjusting set control admixtures to maintain setting time in range required.

E. Placement into Formwork:

1. Before depositing concrete, remove debris from space to be occupied by concrete.
2. Prior to placement of concrete, dampen fill under slabs on ground, dampen sand where vapor retarder is specified, and dampen wood forms.
3. Reinforcement: Secure in position before placing concrete.
4. Place concrete as soon as possible after leaving mixer, without segregation or loss of ingredients, without splashing forms or steel above, and in layers not over 1.5 feet deep, except for slabs which shall be placed full depth. Place and consolidate successive layers prior to initial set of first layer to prevent cold joints.
5. Use placement devices, for example, chutes, pouring spouts, and pumps.
6. Vertical Free Fall Drop to Final Placement: 5 feet in forms 8 inches or less wide and 8 feet in forms wider than 8 inches, except as specified.
   a. For placements where drops are greater than specified, use placement device such that free fall below placement device conforms to required value.
   b. Limit free fall to prevent segregation caused by aggregates hitting reinforcing steel.
7. Do not use aluminum conveying devices.
8. Provide sufficient illumination in the interior of forms so concrete deposition is visible, permitting confirmation of consolidation quality.
9. Joints in Footings and Slabs:
   a. Ensure space beneath plastic water stop completely fills with concrete.
   b. During concrete placement, make visual inspection of entire water stop area.
   c. Limit concrete placement to elevation of water stop in first pass, vibrate concrete under water stop, lift water stop to confirm full consolidation without voids, place remaining concrete to full height of slab.
   d. Apply procedure to full length of water stops.
10. If reinforcement is in direct sunlight or is more than 20 degrees F higher in temperature than concrete temperature before placement, wet reinforcement with water fog spray before placing concrete to cool reinforcement.
11. Trowel and round off top exposed edges of walls with 1/4-inch radius steel edging tool.

F. Conveyor Belts and Chutes:

1. Design and arrange ends of chutes, hopper gates, and other points of concrete discharge throughout conveying, hoisting, and placing system for concrete to pass without becoming segregated.
2. Do not use chutes longer than 50 feet.
3. Minimum Slopes of Chutes: Angled to allow concrete to readily flow without segregation.
4. Conveyor Belts:
   a. Approved by Engineer.
   b. Wipe clean with device that does not allow mortar to adhere to belt.
   c. Cover conveyor belts and chutes.

G. Retempering: Not permitted for concrete where cement has partially hydrated.

H. Pumping of Concrete:

1. Provide standby pump, conveyor system, crane and concrete bucket, or other system onsite during pumping, for adequate redundancy to assure completion of concrete placement without cold joints in case of primary placing equipment breakdown.
2. Minimum Pump Hose (Conduit) Diameter: 4 inches.
3. Replace pumping equipment and hoses (conduits) that are not functioning properly.

I. Maximum Size of Concrete Placements:

1. Limit size of each placement to allow for strength gain and volume change due to shrinkage
2. Locate expansion, control, contraction, and construction joints where shown. When expansion or control joints are not shown, provide construction joints at maximum spacing of 40 feet. When expansion or control joint spacing exceeds 60 feet, provide intermediate construction joints at maximum spacing of 40 feet. Uniformly space construction joints. Vertical construction joint shall not be greater than 20 feet from wall corners or intersections
3. Consider beams, girders, brackets, column capitals, and haunches as part of floor or roof system and place monolithically with floor or roof system.
4. Should placement sequence result in cold joint located below finished water surface, install water stop in joint.

J. Minimum Time Between Adjacent Placements:

1. Construction Joints: 14 days (7 days wet cure and 7 days dry cure).
2. Control Joints: 6 days.
3. Expansion Joints/Contraction Joints: 1 day.
4. At least 2 hours shall elapse after depositing concrete in long columns and walls thicker than 8 inches before depositing concrete in beams, girders, or slabs supported thereon.
5. For columns and walls 10 feet in height or less, wait at least 45 minutes prior to depositing concrete in beams, girders, brackets, column capitals, or slabs supported thereon.

K. Removal of Water: Unless tremie method for placing concrete is specified, remove water from space to be occupied by concrete.

L. Consolidation and Visual Observation:

1. Consolidate concrete with internal vibrators with minimum frequency of 8,000 cycles per minute and amplitude as required to consolidate concrete in section being placed.
2. Provide at least one standby vibrator in operable condition at placement Site prior to placing concrete.
3. Consolidation Equipment and Methods: ACI 309R.
4. Provide sufficient windows in forms or limit form height to allow for concrete placement through windows and for visual observation of concrete.
5. Vibration consolidation shall not exceed distance of 3 feet from point of placement.
6. Vibrate concrete in vicinity of joints to obtain impervious concrete.

M. Hot Weather:

1. Prepare ingredients, mix, place, cure, and protect in accordance with ACI 305R.
2. Placement frequency shall be such that lift lines will not be visible in exposed concrete finishes.
3. Maintain concrete temperature below 80 degrees F at time of placement, or furnish test data or provide other proof that admixtures and mix ingredients do not produce flash set plastic shrinkage, or cracking due to heat of hydration. Cool ingredients before mixing to maintain fresh concrete temperatures as specified or less.
4. Provide for windbreaks, shading, fog spraying, sprinkling, ice, wet cover, or other means as necessary to maintain concrete at or below specified temperature.

5. Prevent differential temperature between reinforcing steel and concrete.
6. Evaporation Retardant: As specified in Section 03370, Concrete Curing.

N. Cold Weather Placement:

1. Do not place concrete when ambient temperature is below 40 degrees F or approaching 40 degrees F and falling, without special protection as specified or approved by Engineer.
2. Do not place concrete against frozen earth or ice, or against forms and reinforcement with frost or ice present.
3. Provide heated enclosures when air temperatures are below 40 degrees F.
4. Maintain surface temperature of concrete above 40 degrees F and cure concrete as specified in Section 03370, Concrete Curing, for minimum of 7 days.
5. Provide maximum and minimum thermometers placed on concrete surfaces spaced throughout Work to allow monitoring of concrete surface temperatures representative of Work.
6. In accordance with ACI 306.1 and ACI 301.
7. External Heating Units:
   a. Vent heating units to atmosphere and do not locally heat or dry concrete. Where water cure is specified, maintain wet condition.
   b. Do not exhaust heater flue gases, (causes concrete carbonation due to concentrated carbon dioxide,) directly into enclosed area.
8. Maintain curing conditions as specified in Section 03370, Concrete Curing.

## 3.02 CONCRETE BONDING

A. Horizontal Construction Joints in Reinforced Concrete Walls:

1. Thoroughly clean and saturate surface of joint with water.
2. Limit slurry concrete placement to 2-inch maximum thickness, 1-inch minimum thickness.
3. Use positive measuring device such as bucket or other device that will contain only enough slurry concrete for depositing in visually measurable area of wall to ensure that portion of form receives appropriate amount of slurry concrete to satisfy placement thickness requirements.
4. Do not deposit slurry concrete from pump hoses or large concrete buckets, unless specified placement thickness can be maintained and verified through inspection windows close to joint.
5. Limit concrete placed immediately on top of slurry concrete to 12 inches thick. Thoroughly vibrate to mix concrete and slurry concrete together.

B. To Existing Concrete:

1. Thoroughly clean and mechanically roughen existing concrete surfaces to roughness profile of 1/4 inch.
2. Saturate surface with water for 24 hours prior to placing new concrete.

3.03 CONSTRUCTION JOINTS

A. As specified in Section 03251, Concrete Joints.

3.04 REPAIRING CONCRETE

A. General:

1. Inject cracks that leak with crack repair epoxy as specified in Section 03740, Concrete Repair Crack Injection.
2. Repair horizontal concrete surfaces using one of the materials specified in Section 03722, Horizontal Concrete Surface Repair Systems. Select system, submit for review, and obtain approval from Engineer prior to use.
3. Repair vertical and overhead concrete as specified in Section 03720, Vertical And Overhead Concrete Repair Systems.
4. Develop repair techniques with material manufacturer on mockup panels prior to starting actual repair work and show how finish color will blend with adjacent surfaces. Obtain approval from Engineer.
5. Obtain quantities of repair material and manufacturer's detailed instructions for use to provide repair with finish to match adjacent surface or apply sufficient repair material adjacent to repair to blend finish appearance.
6. Repair of concrete shall provide structurally sound surface finish, uniform in appearance or upgrade finish by other means until acceptable to Engineer.

B. Tie Holes:

1. Fill with nonshrink grout as specified in Section 03600, Grout.
2. Match color of adjacent concrete and demonstrate on mockup panels first.
3. Compact grout using steel hammer and steel tool to drive grout to high density. Cure grout with water.

C. Alternate Form Ties; Through-Bolts:

1. Mechanically roughen entire interior surface of through hole. Epoxy coat roughened surface and drive elastic vinyl plug to half depth of hole.

Dry pack entire hole from both sides of plug with nonshrink grout, as specified in Section 03600, Grout. Use only enough water to dry pack grout. Dry pack while epoxy is still tacky. If epoxy has dried, remove epoxy by mechanical means and reapply new epoxy.

2. Compact grout using steel hammer and steel tool to drive grout to high density. Cure grout with water.

D. Exposed Metal Objects:

1. Metal objects not intended to be exposed in as-built condition of structure including wire, nails, and bolts, shall be removed by chipping back concrete to depth of 1 inch and then cutting or removing metal object.
2. Repair area of chipped-out concrete per requirements of Section 03720, Vertical And Overhead Concrete Repair Systems.

E. Blockouts at Pipes or Other Penetrations:

1. Install per details shown on Drawings or submit proposed blockouts for review.
2. Use nonshrink, nonmetallic grout, Category I or II as specified in Section 03600, Grout.

3.05 CONCRETE WALL FINISHES

A. Type W-1 (Ordinary Wall Finish):

1. Patch tie holes.
2. Knock off projections.
3. Patch defective areas.

B. Type W-2 (Smooth Wall Finish):

1. Patch tie holes.
2. Grind off projections, fins, and rough spots.
3. Patch defective areas and repair rough spots resulting from form release agent failure or other reasons to provide smooth uniform appearance.

C. Type W-5 (Finish for Painting):

1. Patch tie holes.
2. Grind off projections, fins, and rough spots.
3. Patch and repair defective areas as specified for Type W-2.
4. Leave surface ready for painting as specified in Section 09900, Painting and Protective Coatings.

## 3.06 CONCRETE SLAB FINISHES

A. General:

1. Finish slab concrete per the requirements of ACI 302.1R.
2. Use manual screeds, vibrating screeds, or roller compacting screeds to place concrete level and smooth.
3. Do not use "jitterbugs" or other special tools designed for purpose of forcing coarse aggregate away from surface and allowing layer of mortar, which will be weak and cause surface cracks or delamination, to accumulate.
4. Do not dust surfaces with dry materials.
5. Use evaporation retardant.
6. Round off edges of slabs with steel edging tool, except where cove finish is shown. Steel edging tool radius shall be 1/4 inch for slabs subject to wheeled traffic.

B. Type S-1 (Steel Troweled Finish):

1. Finish by screeding and floating with straightedges to bring surfaces to required finish elevation. Use evaporation retardant.
2. While concrete is still green, but sufficiently hardened to bear a person's weight without deep imprint, wood float to true, even plane with no coarse aggregate visible.
3. Use sufficient pressure on wood floats to bring moisture to surface.
4. After surface moisture has disappeared, hand trowel concrete to produce smooth, impervious surface, free from trowel marks.
5. Burnish surface with an additional troweling. Final troweling shall produce ringing sound from trowel.
6. Do not use dry cement or additional water during troweling, nor will excessive troweling be permitted.
7. Power Finishing:
   a. Approved power machine may be used in lieu of hand finishing in accordance with directions of machine manufacturer.
   b. Do not use power machine when concrete has not attained necessary set to allow finishing without introducing high and low spots in slab.
   c. Do first steel troweling for slab S-1 finish by hand.

C. Type S-2 (Wood Float Finish:

1. Finish slab to receive fill and mortar setting bed by screeding with straightedges to bring surface to required finish plane.
2. Wood float to compact and seal surface.

3. Remove laitance and leave surface clean.
4. Coordinate with other finish procedures.

D. Type S-5 (Broomed Finish):

1. Finish as specified for Type S-1 floor finish, except omit final troweling and finish surface by drawing fine-hair broom lightly across surface.
2. Broom in same direction and parallel to expansion joints, or, in the case of inclined slabs, perpendicular to slope, except for round roof slab, broom surface in radial direction.

E. Type S-6 (Sidewalk Finish):

1. Slope walks down 1/4 inch per foot away from structures, unless otherwise shown.
2. Strike off surface by means of strike board and float with wood or cork float to true plane, then flat steel trowel before brooming.
3. Broom surface at right angles to direction of traffic or as shown.
4. Lay out sidewalk surfaces in blocks, as shown or as directed by Engineer, with grooving tool.

F. Concrete Curbs:

1. Float top surface of curb smooth, and finish all discontinuous edges with steel edger.
2. After concrete has taken its initial set, remove front form and give exposed vertical surface an ordinary wall finish, Type W-1.

## 3.07 CONCRETE SLAB TOLERANCES

A. Slab Tolerances:

1. Exposed Slab Surfaces: Comprise of flat planes as required within tolerances specified.
2. Slab Finish Tolerances and Slope Tolerances: Crowns on floor surface not too high as to prevent 10-foot straightedge from resting on end blocks, nor low spots that allow block of twice the tolerance in thickness to pass under supported 10-foot straightedge.
3. Slab Type S-A: Steel gauge block 5/16 inch thick.
4. Slab Type S-B: Steel gauge block 1/8 inch thick.
5. Slab Type S-A and S-B: Finish Slab Elevation: Slope slabs to floor drain and gutter, and shall adequately drain regardless of tolerances.
6. Thickness: Maximum 1/4 inch minus or 1/2 inch plus from thickness shown. Where thickness tolerance will not affect slope, drainage, or slab elevation, thickness tolerance may exceed 1/2 inch plus.

## 3.08 PROTECTION OF TRENCH DRAIN SYSTEM

A. Prohibit traffic across drains until concrete has reached its design strength as specified herein.

B. Prevent construction debris from entering trench channels after final cleaning.

## 3.09 BACKFILL AGAINST WALLS

A. Do not backfill against walls until concrete has obtained specified 28-day compressive strength.

B. Place backfill simultaneously on both sides of wall, where required, to prevent differential pressures.

## 3.10 FIELD QUALITY CONTROL

A. General:

1. Contractor shall retain an independent testing laboratory to conduct testing of production concrete as specified in ACI 301 at a frequency specified in ACI 318, Chapter 5.
2. Provide adequate facilities for safe storage and proper curing of concrete test cylinders onsite for first 24 hours, and for additional time as may be required before transporting to test lab.
3. Provide concrete for testing of slump, air content, and for making cylinders from the point of discharge into forms. When concrete is pumped, Samples used shall be taken from discharge end of pump hose.
4. Evaluation will be in accordance with ACI 301 and Specifications.
5. Specimens shall be made, cured, and tested in accordance with ASTM C31 and ASTM C39.
6. Frequency of testing may be changed at discretion of Engineer.
7. Pumped Concrete: Take concrete samples for slump (ASTM C143) and test cylinders (ASTM C31 and C39).
8. Reject concrete represented by cylinders failing to meet strength and air content specified.

B. Special Inspection: Contractor shall retain Special Inspectors certified by ICC or ICBO to inspect reinforcing and concrete placement and concrete sampling and testing.

C. High Range Water Reducer (Superplasticizer) Admixture Segregation Test: Test each truck prior to use on job.

1. Segregation Test Objective: Concrete with 4-inch to 8-inch slump must stay together when slumped. Segregation is assumed to cause mortar to flow out of mix even though aggregate may stay piled enough to meet slump test.
2. Test Procedure: Make slump test and check for excessive slump and observe to see if mortar or moisture flows from slumped concrete.
3. Reject concrete if mortar or moisture separates and flows out of mix.

D. Cold Weather Placement Tests:

1. During cold weather concreting, cast cylinders for field curing as follows. Use method that will produce greater number of specimens:
   a. Six extra test cylinders from last 100 cubic yards of concrete.
   b. Minimum three specimens for each 2 hours of placing time or for each 100 cubic yards.
2. These specimens shall be in addition to those cast for lab testing.
3. Protect test cylinders from weather until they can be placed under same protection provided for concrete of structure that they represent.
4. Keep field test cylinders in same protective environment as parts of structure they represent to determine if specified strength has been obtained.
5. Test cylinders in accordance with applicable sections of ASTM C31 and ASTM C39.
6. Use test results to determine specified strength gain prior to falsework removal or for prestressing.

E. Tolerances:

1. Walls: Measure and inspect walls for compliance with tolerances specified in Section 03100, Concrete Formwork.
2. Slab Finish Tolerances and Slope Tolerances:
   a. Floor flatness measurements shall be made day after floor is finished and before shoring is removed to eliminate effects of shrinkage, curing, and deflection.
   b. Support 10-foot long straightedge at each end with steel gauge blocks of thicknesses equal to specified tolerance.
   c. Compliance with designated limits in four of five consecutive measurements is satisfactory, unless defective conditions are observed.

## 3.11 MANUFACTURER'S SERVICES

A. Provide the following representative at Site in accordance with Section 01640, Manufacturers' Services, for installation assistance, inspection, and certification of proper installation for concrete ingredients, mix design, mixing, and placement.

1. Batch Plant Representative:
   a. Observe how concrete mixes are performing.
   b. Be present during first placement of each type of concrete mix.
   c. Assist with concrete mix design, performance, placement, weather problems, and problems as may occur with concrete mix throughout Project.
   d. Establish control limits on concrete mix designs.
2. Admixture Manufacturer's Representative:
   a. Demonstrate special features, product performance, product mixing, testing, and placement or installation for each type of admixture.
   b. Observe how concrete mixes are performing.
   c. Be present during first placement of each type of concrete mix.
   d. Assist with concrete mix design, performance, placement, weather problems, and problems as may occur with concrete mix throughout Project, including instructions for redosing.
   e. Provide equipment for control of concrete redosing for air entrainment or high range water reducing admixture (superplasticizers) at Site to maintain proper slump and air content if so needed.
3. Bonding Agent Manufacturer's Representative: Demonstrate product performance, product mixing, and placement.

## 3.12 PROTECTION OF INSTALLED WORK

A. After curing as specified in Section 03370, Concrete Curing, and after applying final floor finish, cover slabs with plywood or particle board or plastic sheeting or other material to keep floor clean and protect it from material and damage due to other construction work.

B. Repair defective areas and areas damaged by construction.

## 3.13 SCHEDULE OF CONCRETE FINISHES

A. Form Tolerances: As specified in Section 03100, Concrete Formwork.

B. Provide concrete finishes as scheduled:

| Area | Type of Finish | Required Form Tolerances |
|---|---|---|
| **EXTERIOR WALL SURFACES** | | |
| Abovegrade/exposed (above a point 6" below finish grade) | W-2 | W-A |
| Backfilled/waterproofed (below a point 6" below finish grade) | W-1 | W-A |
| Backfilled/not waterproofed (below a point 6" below final grade) | W-1 | W-A |
| **INTERIOR WALL SURFACES** | | |
| Open top water-holding tanks and basins/not painted or coated | W-2 | W-A |
| Buildings, pipe galleries, and other dry areas/not painted or coated | W-2 | W-A |
| Buildings, pipe galleries, and other dry areas/painted or coated | W-5 | W-A |
| **EXTERIOR SLABS** | | |
| Roof slab/exposed | S-5 | S-B |
| Water-holding tanks and basins/top of wall | S-1 | S-B |
| Other water-holding tanks and basins | S-1 | S-A |
| Stairs and landings | S-5 | S-B |
| Sidewalks | S-6 | S-B |
| Other exterior slabs | S-1 | S-A |
| **INTERIOR SLABS** | | |
| Buildings, pipe galleries, and other dry areas | S-1 | S-B |
| Slabs to receive mortar setting bed for tile | S-2 | S-A |
| Slabs to receive resilient flooring or carpet | S-1 | S-A |
| Hydraulic channels | S-1 | S-A |

**END OF SECTION**

# SECTION 03370
# CONCRETE CURING

## PART 1 GENERAL

### 1.01 REFERENCES

A. The following is a list of standards which may be referenced in this section:

1. ASTM International (ASTM):
   a. C309, Standard Specification for Liquid Membrane-Forming Compounds for Curing concrete.
   b. C1315, Standard Specification for Liquid Membrane-Forming Compounds having Special Properties for Curing and Sealing Concrete.

### 1.02 SUBMITTALS

A. Action Submittals:

1. Curing methods proposed.
2. Manufacturers' data for the following products:
   a. Evaporation retardant.
   b. Curing compound.
   c. Clear sealer.
   d. Clear floor hardener.

B. Informational Submittals:

1. Curing Compound: Manufacturer's Certificate of Compliance showing moisture retention requirements.

## PART 2 PRODUCTS

### 2.01 MATERIALS

A. Curing Compound:

1. Water-based, high solids content nonyellowing curing compound meeting requirements of ASTM C309 and C1315.
   a. Moisture Loss: 0.40 kg/square m/72 hours maximum.
   b. Capable of meeting moisture retention at manufacturer's specified application rate.

2. Manufacturers and Products:
   a. Chemrex, Inc., Shakopee, MN; Masterkure.
   b. Euclid Chemical Co., Cleveland, OH; Super Diamond Clear VOX.
   c. WR Meadows, Inc., Hampshire, IL; VOCOMP-30.
   d. Vexcon Chemical, Inc.; Philadelphia, PA; Starseal 1315.
   e. Dayton Superior; Safe Cure and Seal 30%.
   f. No "or-equal" or substitute products will be considered.

B. Evaporation Retardant:

1. Optional: Fluorescent color tint that disappears completely upon drying.
2. Manufacturers and Products:
   a. Master Builders Co., Cleveland, OH; CONFILM.
   b. Euclid Chemical Co., Cleveland, OH; Eucobar.
   c. No "or-equal" or substitute products will be considered.

C. Clear Sealer (One-Component Penetrating Silane Sealer):

1. Manufacturers and Products:
   a. Chemrex, Inc., Shakopee, MN; MASTERSEAL SL.
   b. Euclid Chemical Co.; Eucoguard 200.

D. Clear Floor Hardener:

1. Colorless, aqueous premixed solution of zinc and magnesium fluosilicate.
2. Each gallon of fluosilicate solution shall contain minimum 2 pounds of crystals.
3. Manufacturers:
   a. Chemrex, Inc., Shakopee, MN.
   b. Euclid Chemical Co., Cleveland, OH.
   c. Sonneborn, Minneapolis, MN.

E. Water: Clean and potable, containing less than 500 ppm of chlorides.

## PART 3 EXECUTION

### 3.01 CURING OF CONCRETE

A. Use one of the following methods as approved by Engineer:

1. Walls:
   a. General: Where walls are to receive coatings, painting, cementitious material, or other similar finishes, use only water curing procedures.
   b. Method 1: Leave concrete forms in place and keep entire surfaces of forms and concrete wet for 7 days.
   c. Method 2: Apply curing compound, where allowed, immediately after removal of forms.
   d. Method 3: Continuously sprinkle with water 100 percent of exposed surfaces for 7 days starting immediately after removal of forms.
2. Slabs and Curbs:
   a. Method 1: Protect surface by water ponding for 7 days.
   b. Method 2: Cover with burlap or cotton mats and keep continuously wet for 7 days.
   c. Method 3: Cover with 1-inch layer of wet sand, earth, or sawdust, and keep continuously wet for 7 days.
   d. Method 4: Continuously sprinkle exposed surface for 7 days.
   e. Other agreed upon method that will keep moisture present and uniform at all times on surface of slabs. Do not use curing compounds.
   f. Where water curing for slabs during cold weather is not possible, use an Engineer-approved curing compound at manufacturer's recommended coverage per gallon.
   g. Where curing compound cannot be used, special methods using moisture shall be agreed upon prior to placing the concrete slabs.
   h. Protect slabs during cold weather with plastic sheets or other material inside required heated enclosure if foot traffic is permitted on slabs.

B. Use only water curing where additional finishes such as clear sealer, hardeners, painting, and other special coatings are required.

### 3.02 EVAPORATION RETARDANT APPLICATION

A. Spray onto surface of fresh flatwork concrete immediately after screeding to react with surface moisture.

B. Reapply as needed to ensure a continuous moist surface until final finishing is completed.

3.03 CLEAR SEALER APPLICATION

A. Apply where indicated in Finish Schedule.

B. Before application, water cure concrete walls and floors to receive sealer for a minimum of 28 days, keep clean, unpainted, free from membrane curing compounds, with Work above them completed.

C. Apply with stiff brush, short nap roller, squeegee, garden sprayer, or conventional paint spray equipment.

D. Apply at a coverage rate of 125 to 200 square feet per gallon and cure the sealer on slabs for the following minimum cure time at the ambient temperatures shown prior to allowing foot traffic:

1. 90 degrees F: 2 hours.
2. 75 degrees F: 4 hours.
3. 50 degrees F: 8 hours.
4. 35 degrees F: 16 hours.

3.04 CLEAR HARDENER APPLICATION

A. Before application, water cure floors to receive hardener for minimum 28 days, keep clean, unpainted, free from membrane curing compounds, and perfectly dry with all work above them completed.

B. Apply hardener evenly, using three coats, allowing 24 hours between coats:

1. First coat 1/3 strength, second coat 1/2 strength, and third coat 2/3 strength, mix with water.
2. Apply each coat so as to remain wet on surfaces for 15 minutes.
3. Apply approved hardeners in accordance with manufacturer's instructions.
4. After final coat is completed and dry, remove surplus hardener from surface by scrubbing and mopping with water.

3.05 MANUFACTURER'S SERVICES

A. Provide manufacturer's representative at Site in accordance with Section 01640, Manufacturers' Services, for installation assistance, inspection, and certification of proper installation for products specified.

B. Provide clear sealer manufacturer's representative to demonstrate proper application of product.

C. Provide floor hardener manufacturer's representative to demonstrate proper mixing and application of product.

D. Provide curing compound manufacturer's representative to demonstrate proper application of curing compound to show coverage in one coat.

**END OF SECTION**

# SECTION 03600
# GROUT

## PART 1 GENERAL

### 1.01 REFERENCES

A. The following is a list of standards which may be referenced in this section:

1. ASTM International (ASTM):
   a. C230, Standard Specification for Flow Table for Use in Tests of Hydraulic Cement.
   b. C1107, Standard Specification for Packaged Dry, Hydraulic-Cement Grout (Nonshrink).
2. Corps of Engineers (COE):
   a. CRD-C611, Flow of Grout for Preplaced Aggregate Concrete.
   b. CRD-C621, Specification for Nonshrink Grout

### 1.02 SUBMITTALS

A. Action Submittals:

1. Product data of grouts.
2. Proposed method for keeping existing concrete surfaces wet prior to placing grout.
3. Forming method for fluid grout placements.
4. Curing method for grout.

B. Informational Submittals:

1. Manufacturer's Written Instructions:
   a. Cement-water ratio of grout.
   b. Mixing of grout.
2. Manufacturer's proposed training schedule for grout work.
3. Manufacturer's Certificate of Compliance:
   a. Grout free from chlorides and other corrosion-causing chemicals.
   b. Nonshrink grout properties of Categories II and III, verifying expansion at 3 or 14 days will not exceed the 28-day expansion and nonshrink properties are not based on gas or gypsum expansion.
4. Manufacturer's Certificate of Proper Installation.
5. Statements of Qualification: Nonshrink grout manufacturer's representative.

6. Test Reports:
   a. Test report for 24-hour evaluation of nonshrink grout.
   b. Test results and service report from demonstration and training session.
   c. Field test reports and laboratory test results for field-drawn Samples.

1.03 QUALIFICATIONS

A. Nonshrink Grout Manufacturer's Representative: Authorized and trained representative of grout manufacturer. Minimum of 1-year experience that has resulted in successful installation of grouts similar to those for this Project.

B. For grout suppliers not listed herein, provide completed 24-hour Evaluation of Nonshrink Grout Test Form, attached at the end of this section. Independent testing laboratory to certify that testing was conducted within last 18 months.

1.04 GUARANTEE

A. Manufacturer's guarantee shall not contain disclaimer on the product data sheet, grout bag, or container limiting responsibility to only the purchase price of products and materials furnished.

B. Manufacturer guarantees participation with Contractor in replacing or repairing grout found defective due to faulty materials, as determined by industry standard test methods.

**PART 2 PRODUCTS**

2.01 NONSHRINK GROUT SCHEDULE

A. Furnish nonshrink grout for applications in grout category in the following schedule:

| | **Temperature Range** | **Max. Placing Time** | |
|---|---|---|---|
| **Application** | **40 to 100 deg F** | **20 min** | **Greater than 20 min** |
| Filling tie holes | I | I | I |
| Column baseplates single-story | I or II | | II |
| Machine bases 25 hp or less | II | II | II |
| Through-bolt openings | II | II | II |
| Machine bases 26 hp and up | III | III | III |

| Application | Temperature Range | Max. Placing Time | |
|---|---|---|---|
| | 40 to 100 deg F | 20 min | Greater than 20 min |
| Baseplates and/or soleplates with vibration, thermal movement, etc. | III | III | III |

2.02 NONSHRINK GROUT

A. Category I:

1. Nonmetallic and nongas-liberating.
2. Prepackaged natural aggregate grout requiring only the addition of water.
3. Test in accordance with ASTM C1107:
   a. Flowable consistency 140 percent, five drops in 30 seconds, in accordance with ASTM C230.
   b. Flowable for 15 minutes.
4. Grout shall not bleed at maximum allowed water.
5. Minimum strength of flowable grout, 3,000 psi at 3 days, 5,000 psi at 7 days, and 7,000 psi at 28 days.
6. Manufacturers and Products:
   a. Chemrex, Inc., Shakopee, MN; Set Grout.
   b. Euclid Chemical Co., Cleveland, OH; NS Grout.
   c. Dayton Superior Corp., Miamisburg, OH; 1107 Advantage Grout.
   d. US MIX Products, Denver, CO; US Spec Multi-Purpose Grout.
   e. L & M Construction Chemicals, Inc., Omaha, NE; Duragrout.

B. Category II:

1. Nonmetallic, nongas-liberating.
2. Prepackaged natural aggregate grout requiring only the addition of water.
3. Aggregate shall show no segregation or settlement at fluid consistency at specified times or temperatures.
4. Test in accordance with COE CRD-C621 and ASTM C1107, Grade B:
   a. Fluid consistency 20 to 30 seconds in accordance with COE CRD-C611.
   b. Temperatures of 40, 80, and 100 degrees F.
5. 1 hour after mixing, pass fluid grout through flow cone with continuous flow.
6. Minimum strength of fluid grout, 3,500 psi at 1 day, 4,500 psi at 3 days, and 7,500 psi at 28 days.

7. Maintain fluid consistency when mixed in 1 to 9 yard loads in ready-mix truck.
8. Manufacturers and Products:
   a. Chemrex, Inc., Shakopee, MN; Master Flow 928.
   b. Five Star Products Inc., Fairfield, CT; Five Star 100.
   c. Euclid Chemical Co., Cleveland, OH; Hi Flow Grout.
   d. Dayton Superior Corp., Miamisburg, OH; Sure Grip High Performance Grout.
   e. L & M Construction Chemicals, Inc., Omaha, NE; Crystex.

C. Category III:

1. Metallic and nongas-liberating.
2. Prepackaged aggregate grout requiring only the addition of water.
3. Aggregate shall show no segregation or settlement at fluid consistency at specified times or temperatures.
4. Test in accordance with COE CRD-C621 and ASTM C1107, Grade A:
   a. Fluid consistency 20 to 30 seconds in accordance with COE CRD-C611.
   b. Temperatures of 40 and 100 degrees F.
5. 1 hour after mixing, pass fluid grout through flow cone with continuous flow.
6. Minimum strength of fluid grout, 4,000 psi at 1 day, 5,000 psi at 3 days, and 9,000 psi at 28 days.
7. Maintain fluid consistency when mixed in 1 to 9 yard loads in ready-mix truck.
8. Manufacturer and Product:
   a. Chemrex, Inc., Shakopee, MN; EMBECO 885.
   b. L & M Construction Chemicals, Inc., Omaha, NE; Ferrogrout.

## PART 3 EXECUTION

### 3.01 NONSHRINK GROUT

A. General: Mix, place, and cure nonshrink grout in accordance with grout manufacturer's representative's training instructions.

B. Form Tie or Through-Bolt Holes: Provide nonshrink grout, Category I and II, fill space with dry pack dense grout hammered in with steel tool and hammer. Through-bolt holes, coordinate dry pack dense grout application with vinyl plug in Section 03100, Concrete Formwork, and bonding agent in Section 03300, Cast-in-Place Concrete.

C. Grouting Machinery Foundations:

1. Block out original concrete or finish off at distance shown below bottom of machinery base with grout. Prepare concrete surface by sandblasting, chipping, or by mechanical means to remove any soft material.
2. Set machinery in position and wedge to elevation with steel wedges, or use cast-in leveling bolts.
3. Form with watertight forms at least 2 inches higher than bottom of plate.
4. Fill space between bottom of machinery base and original concrete in accordance with manufacturer's representative's training instructions.

## 3.02 FIELD QUALITY CONTROL

A. Evaluation and Acceptance of Nonshrink Grout:

1. Provide a flow cone and cube molds with restraining plates onsite. Continue tests during Project as demonstrated by grout manufacturer's representative.
2. Perform flow cone and bleed tests, and make three 2-inch by 2-inch cubes for each 25 cubic feet of each type of nonshrink grout used. Use restraining caps for cube molds in accordance with COE CRD-C621.
3. For large grout applications make three additional cubes and one more flow cone test. Include bleed test for each additional 25 cubic feet of nonshrink grout placed.
4. Consistency: As specified in Article Nonshrink Grout. Grout with consistencies outside range requirements shall be rejected.
5. Segregation: As specified in Article Nonshrink Grout. Grout when aggregate separates shall be rejected.
6. Nonshrink grout cubes shall test equal to or greater than minimum strength specified.
7. Strength Test Failures: Nonshrink grout work failing strength tests shall be removed and replaced.
8. Perform bleeding test to demonstrate grout will not bleed.
9. Store cubes at 70 degrees F.
10. Independent testing laboratory shall prepare, store, cure, and test cubes in accordance with COE CRD-C621.

## 3.03 MANUFACTURER'S SERVICES

A. General:

1. Coordinate demonstrations, training sessions, and applicable Site visits with grout manufacturer's representative.

2. Provide and conduct onsite, demonstration and training sessions for bleed tests, mixing, flow cone measurement, cube testing, application, and curing for each category and type of nonshrink grout.
3. Necessary equipment and materials shall be available for demonstration.

B. Training:

1. Training is required for all Type II and Type III grout installations.
2. Grout manufacturer's representative shall train Contractor to perform grout work.
3. Establish location at Site and schedule time for grout manufacturer's demonstration and training session of proposed nonshrink grouts. Mix nonshrink grouts to required consistency, test, place, and cure on actual Project, e.g., baseplates and tie holes to provide actual on-the-job training.
4. Use minimum of two bags for each grout Category II and Category III. Mix grout to fluid consistency and conduct flow cone and two bleed tests, make a minimum of six cubes for testing of two cubes at 1, 3, and 28 days. Use remaining grout for final Work.
5. Training shall include methods for curing grout.
6. Mix and demonstrate patching through-bolt holes, blockouts, and similar items.
7. Transport test cubes to independent test laboratory and obtain test reports.

3.04 SUPPLEMENTS

A. The supplement listed below, following "End of Section," is part of this Specification.

1. 24-hour Evaluation of Nonshrink Grout Test Form and Grout Testing Procedures.

**END OF SECTION**

**SUPPLEMENT 1**

_____
**(Test Lab Name)**

_____
**(Address)**

_____
**(Phone No.)**

## 24-HOUR EVALUATION OF NONSHRINK GROUT TEST FORM

OBJECTIVE: Define standard set of test procedures for an independent testing laboratory to perform and complete within a 24-hour period.

SCOPE: Utilize test procedures providing 24-hour results to duplicate field grouting demands. Intent of evaluation is establish grout manufacturer's qualifications.

PRIOR TO TEST: Obtain two bags of each type of grout.

1. From intended grout supplier for Project.
2. Two bags of grout shall be of same lot number.

ANSWER THE FOLLOWING QUESTIONS FOR GROUT BEING TESTED FROM LITERATURE, DATA, AND PRINTING ON BAG:

| | | | |
|---|---|---|---|
| A. | Product data and warranty information contained in company literature and data? | Yes_____ | No_____ |
| B. | Literature and bag information meet specified requirements? | Yes_____ | No_____ |
| C. | Manufacturer guarantees grout as specified in Article Guarantee? | Yes_____ | No_____ |
| D. | Guarantee extends beyond grout replacement value and allows participation with Contractor in replacing and repairing defective areas? | Yes_____ | No_____ |
| E. | Water demands and limits printed on bag? | Yes_____ | No_____ |
| F. | Mixing information printed on the bag? | Yes_____ | No_____ |
| G. | Temperature restrictions printed on bag? | Yes_____ | No_____ |

*Rejection of a grout will occur if one or more answers are noted NO.

## GROUT TESTING PROCEDURES

A. Bagged Material:

1. List lot numbers. _____
2. List expiration date. _____
3. Weigh bags and record weight. _____

Engineer will disqualify grout if bag weights have misstated measure plus or minus 2 pounds by more than one out of two bags. (Accuracy of weights is required to regulate amount of water used in mixing since this will affect properties.)

B. Mixing and Consistency Determination:

1. Mix full bag of grout in 10 gallon pail.
2. Use electric drill with a paddle device to mix grout (jiffy or jiffler type paddle).
3. Use maximum water allowed per water requirements listed in bag instructions.
4. Mix grout to maximum time listed on bag instructions.
5. In accordance with COE CRD-C611 (flow cone) determine time of mixed grout through the flow cone. _____ seconds
6. Add water to attain 20 to 30 second flow in accordance with COE CRD-C611.
7. Record time of grout through cone at new water demand. _____ seconds
8. Record total water needed to attain 20 to 30 second flow. _____ pounds
9. Record percent of water. _____ percent

C. When fluid grout is specified and additional water is required beyond grout manufacturer's listed maximum water, COE CRD-C621 will be run at new water per grout ratio to determine whether grout passes using actual water requirements to be fluid. Use new water per grout ratio on remaining tests.

D. Bleed Test:

1. Fill two gallon cans half full of freshly mixed grout at ambient temperatures for each category and at required consistency for each.
2. Place one can of grout in tub of ice water and leave one can at ambient temperature.
3. Cover top of both cans with glass or plastic plate preventing evaporation.
4. Maintain 38 to 42 degrees F temperature with grout placed in ice and maintain ambient temperature for second container for 1 hour.
5. Visually check for bleeding of water at 15-minute intervals for 2 hours.

6. Perform final observation at 24 hours.

If grout bleeds a small amount at temperatures specified, grout will be rejected.

E. Extended Flow Time and Segregation Test (for Category II and III):

1. Divide the remaining grout into two 3 gallon cans. Place the cans into the 40-degree F and 100-degree F containers and leave for 20, 40, and 60 minutes. Every 20 minutes remove and check for segregation or settlement of aggregate. Use a gloved hand to reach to the bottom of the can, if more than 1/4-inch of aggregate has settled to the bottom or aggregate has segregated into clumps reject the grout.

2. Right after the settlement test mix the grout with the drill mixer for 10 seconds. Take a COE CRD-C611 flow cone test of grout and record flow time. Maintain this process for 1 hour at ambient temperatures of 40 and 100 degrees F.

   a. 20 min _____, sec. @ 40 degrees F.

   b. 40 min _____, sec. @ 40 degrees F.

   c. 60 min _____, sec. @ 40 degrees F.

   d. 20 min _____, sec. @ 100 degrees F.

   e. 40 min _____, sec. @ 100 degrees F.

   f. 60 min _____, sec. @ 100 degrees F.

All Category II and III grout that will not go through the flow cone with continuous flow after 60 minutes will be disqualified.

_____ _____
Qualified Disqualified

F. 24-hour Strength Test:

1. Using grout left in mixing cans in accordance with COE CRD-C621 for mixing and consistency determination test and for extended time flow test, make minimum of nine cube samples.

2. Store cubes at 70 degrees F for 24 hours.

3. Record average compressive strength of nine cubes at 24 hours.

Grout will be disqualified if 24-hour compressive strengths are under 2,500 psi for grouts claiming fluid placement capabilities.

Grouts that have not been disqualified after these tests are qualified for use on the Project for the application indicated in Nonshrink Grout Schedule.

_____ _____
Signature of Independent Testing Laboratory Date Test Conducted

# SECTION 03720
# VERTICAL AND OVERHEAD CONCRETE SURFACE REPAIR SYSTEMS

## PART 1 GENERAL

### 1.01 SCOPE

A. The work of this Section shall be performed where and if required, as directed by the Engineer.

### 1.02 REFERENCES

A. The following is a list of standards which may be referenced in this section:

1. American Association of State Highway and Transportation Officials (AASHTO): T277, Standard Method of Test for Rapid Determination of the Chloride Permeability of Concrete.
2. ASTM International (ASTM):
   a. C78, Standard Test Method for Flexural Strength of Concrete (Using Simple Beam with Third-Point Loading).
   b. A82, Standard Specification for Steel Wire, Plain, for Concrete Reinforcement.
   c. C109, Standard Test Method for Compressive Strength of Hydraulic Cement Mortars.
   d. A185, Standard Specification for Steel Welded Wire Fabric, Plain, for Concrete Reinforcement.
   e. C348, Standard Test Method for Flexural Strength of Hydraulic Cement Mortars.
   f. C469, Standard Test Method for Static Modulus of Elasticity and Poisson's Ratio of Concrete in Compression.
   g. C496, Standard Test Method for Splitting Tensile Strength of Cylindrical Concrete Specimens.
   h. C596, Standard Test Method for Drying Shrinkage of Mortar Containing Portland Cement.
   i. C666, Standard Test Method for Resistance of Concrete to Rapid Freezing and Thawing.
   j. C882, Standard Test Method for Bond Strength of Epoxy-Resin Systems Used with Concrete by Slant Shear.
   k. C1042, Standard Test Method for Bond Strength of Latex Systems used in Concrete.
   l. C1202, Standard Test Method for Electrical Induction of Concrete's Ability to Resist Chloride Ion Penetration.

m. E699, Criteria for Evaluation of Agencies Involved in Testing, Quality Assurance, and Evaluating Building Components in Accordance with Test Methods Promulgated by ASTM Committee.

1.03 DEFINITIONS

A. Low Pressure Spray Mortar: Mortar designated by "S" before the product number, applied by low pressure spraying, or in small areas by hand troweling.

B. Nonstructural: Areas that are deemed to be "surface" only, and not under structural load or heavy wear requirements; less than 1 inch in depth.

C. Rebound: Wet shotcrete that bounces off a surface against which it is projected.

D. Shotcrete: Mortar pumped through a hose and projected at high velocity.

E. Structural: Areas that are subject to structural loading or heavy wear, and are defects or parts of defects that extend 1 inch or deeper into the concrete.

1.04 SUBMITTALS

A. Action Submittals:

1. Samples: Mesh reinforcement and mesh anchor.

B. Informational Submittals:

1. Mortar System:
   a. Manufacturer's installation bulletin.
   b. Manufacturer's recommended fabric size for mesh reinforcement.
2. Mesh manufacturer's installation instructions and allowable load criteria.
3. Written description of equipment proposed for hydrodemolition surface preparation.
4. Certificates:
   a. Certificate of Compliance that proposed product systems meet or exceed specified performance criteria when tested in accordance with Article Field Quality Control.
   b. Mortar system Manufacturer's Certificate of Proper Installation.
5. Statements of Qualification:
   a. Independent testing laboratory.
   b. Shotcrete Nozzleman.

c. Mortar system manufacturer's representative.

6. Mortar system manufacturer's proposed modified test procedures for ASTM C109 and ASTM C882 test methods.
7. Independent testing laboratory test report.

1.05 QUALITY ASSURANCE

A. Qualifications:

1. Independent Testing Laboratory: Based on evaluation of laboratory submitted criteria in accordance with ASTM E699.
2. Mortar System Applicator: Experienced shotcrete applicator endorsed by mortar system manufacturer. For low pressure spray mortar system in lieu of endorsement, complete mortar system manufacturer's demonstration in accordance with Article Manufacturer's Services.
3. Mortar System Manufacturer's Representative: As specified in Section 01640, Manufacturers' Services.

B. Mockups: For each type of mortar system application demonstration, prepare an area of at least 10 feet by 10 feet by the average thickness required for the Project.

**PART 2 PRODUCTS**

2.01 SHOTCRETE MORTAR SYSTEM (STRUCTURAL)

A. Properties of Mixed Mortar:

1. Working Time: 5 to 10 minutes.
2. Finishing Time: 10 to 20 minutes.
3. Color: Dark gray.

B. Properties of Cured Mortar:

1. Compressive strength for 3-inch cubes in accordance with "modified" ASTM C109:
   a. 2 Days: 5,100 psi minimum.
   b. 7 Days: 6,900 psi minimum.
   c. 28 Days: 9,000 psi minimum.
2. Flexural Strength (Modulus of Rupture), ASTM C78 at 28 Days: 1,200 psi minimum.
3. Tensile Strength, ASTM C496 at 28 Days: 640 psi minimum.
4. Permeability, AASHTO T277: 1,000 coulombs maximum.
5. Mortar shall not produce a vapor barrier.

C. Mortar Materials:

1. Blend of selected portland cements, microsilica, and specially graded aggregates and fibers applicable for vertical and overhead surfaces.
2. Materials shall not contain asbestos, chlorides, nitrates, added gypsum, added lime, or high aluminum cements.
3. Noncombustible before and after cure.
4. Furnish in a factory proportioned unit.
5. Workability from 1/4-inch depth and greater.

D. Bonding Agent: Three-component epoxy resin and portland cement adhesive, specifically formulated for bonding plastic portland cement concrete or mortar to hardened portland cement concrete.

1. Mixed Bonding Agent Properties:
   a. Pot Life: 75 to 105 minutes.
   b. Contact Time: 24 hours.
   c. Concrete Color: Gray.
2. Cured Epoxy Resin Portland Cement Adhesive Properties:
   a. Compressive Strength, ASTM C109:
      1) 1 Day: 810 psi minimum.
      2) 7 Days: 6,200 psi minimum.
      3) 28 Days: 8,700 psi minimum.
   b. Splitting Tensile Strength, ASTM C496 at 28 Days: 540 psi minimum.
   c. Flexural Strength, ASTM C348: 1,100 psi minimum.
   d. Bond Strength, ASTM C882 at 14 Days:
      1) 0 Hour Open Time: 2,500 psi minimum.
      2) 24 Hours Open Time: 1,700 psi minimum.
   e. Bonding agent shall not produce a vapor barrier.
3. Manufacturers and Products:
   a. Sika Corp., Lyndhurst, NJ; Sika Armatec 110.
   b. Master Builders Inc., Cleveland, OH; Concresive Liquid (LPL).

E. Manufacturers and Products for Shotcrete Mortar System:

1. Sika Corp., Lyndhurst, NJ; SIKACEM 103 with fibers added in accordance with manufacturer's recommendations.
2. Master Builders Inc., Cleveland, OH; Shotpatch 15 SF.
3. Euclid Chemical Co., Cleveland, OH; SR-V0.

## 2.02 LOW PRESSURE SPRAY MORTAR SYSTEM (STRUCTURAL)

A. Mortar:

1. One component, rheoplastic, cement based, fiber reinforced, shrinkage compensated, gray in color, with a minimum 30-minute working time.
2. Cured materials mixed to a flow of 70 percent, at five drops shall conform to the following criteria:
   a. Minimum Slant Shear Bond Strength: 3,000 psi in 28 days in accordance with "modified" ASTM C882 test method.
   b. Minimum Compressive Strength: 11,000 psi at 28 days in accordance with ASTM C109.
   c. Minimum Direct Shear Bond Strength: 650 psi in 28 days in accordance with Michigan DOT.
   d. Minimum Tensile Bond Strength (MBT In-House Test): 300 psi. in 28 days.
   e. Minimum Flexural Properties: 1,250 psi in 28 days in accordance with ASTM C348.
   f. Modulus of Elasticity: 4.1 to 4.5 by $10^6$ psi in accordance with ASTM C469.
   g. Maximum Permeability: 1,000 coulombs in accordance with AASHTO T277.
   h. System shall not produce a vapor barrier.

B. Sprayable, extremely low permeability, sulfate resistant, easy to use and requiring only the addition of water.

C. Free of chlorides and other chemicals causing corrosion.

D. Manufacturer and Product: Master Builders Technologies Co., Cleveland, OH; EMACO S88CA with Concresive liquid (LPL) bonding agent for hand applied areas.

## 2.03 POLYMER-MODIFIED REPAIR MORTAR (NON-STRUCTURAL)

A. Mortar: One component, polymer-modified, cementitious based, chloride resistant, flowable, gray in color, working time of 20 minutes minimum, surface renovation mortar conforming to the following properties:

1. Bond Strength in Accordance With ASTM C 1042 test method at 28 Days: Minimum 2,000 psi.
2. Modulus of Elasticity: ASTM C469, minimum 2.0 by $10^6$ psi.
3. Compressive Strength, ASTM C109 at 28 Days: Minimum 7,000 psi.
4. Flexural Properties, ASTM C348 at 28 Days: Minimum 1,200 psi.

5. Permeability, AASHTO T277: 800 coulombs maximum.
6. Splitting Tensile Strength. ASTM C496 at 28 days: minimum.
7. Drying Shrinkage, ASTM C596 at 28 Days: Maximum 0.1 percent.
8. Freeze Thaw Resistance, ASTM C666, at 300 Cycles: 90 percent RDF.

B. Manufacturer and Product: Master Builders Technologies Co., Cleveland, OH; EMACO R-300, R-310 or R-320.

2.04 WATER

A. Clean and free from oil, acid, alkali, organic matter, or other deleterious substances, meeting federal drinking water standards.

2.05 ACCESSORIES

A. Mesh Reinforcement: Welded wire fabric with spacing of wires, and wire size in accordance with ASTM A185 and ASTM A82, and mortar system manufacturer's recommendations.

B. Tie Wire: 16 gauge galvanized.

C. Mesh Anchors:

1. Stainless steel Type 304 tie wire anchors.
2. Manufacturer and Product: Hilti Fastening Systems; HKT-14.

D. Finishing Aid Manufacturer and Product: Master Builders Inc., Cleveland, OH; CONFILM.

E. Flexible Cementitious Rebar Coating Manufacturer and Product: Master Builders Inc., Cleveland, OH; EMACO P22.

**PART 3 EXECUTION**

3.01 GENERAL

A. Concrete surface repair system may either be shotcrete mortar or low pressure spray mortar for structural repairs and hand or low pressure spray applied polymer-modified mortar for non-structural surface applications.

3.02 PREPARATION

A. Remove unsound and deteriorated concrete from Work by high pressure water blasting machines capable of scoring concrete surfaces to minimum amplitude

roughness of 3/16-inch or as shown. Remove to provide for maximum thickness specified for mortar.

B. High pressure water blasting machines with 16,000 to 20,000 psi minimum.

C. Collect and dispose of water from removal operations in manner and location acceptable to Owner.

D. Do not use power-driven jackhammers and chipping hammers, unless water blasting is prohibited due to potential damage to installed equipment.

E. Remove concrete minimum of 1-inch clearance around rebar for application and bonding of new mortar to entire periphery of exposed rebar if the following surface conditions exist:

1. 50 percent or more of periphery around rebar is exposed during removal of concrete.
2. 25 percent or more of periphery around rebar is exposed during removal of concrete and corrosion has eventuated to the extent that loss of section has occurred.
3. Bond between existing concrete and reinforcement has deteriorated.

F. Clean exposed reinforcing bars of rust and concrete, and coat with flexible cementitious rebar coating.

G. Maintain surface areas free of slurry where concrete has been removed. Remove slurry from prepared areas before new mortar is applied.

H. Clean surface areas to be filled with new mortar of laitance and contamination by high pressure water blasting not more than 24 hours before applying bonding agent. Saturated surface dry (SSD) existing concrete at time of application of mortar.

## 3.03 INSTALLATION OF MESH REINFORCEMENT

A. Provide reinforcement when mortar application is more than 3 inches deep unless otherwise shown and when existing reinforcement is not exposed.

B. Install mesh anchors in accordance with mesh manufacturer's instructions.

C. Fasten reinforcement to mesh anchors with tie wire.

D. Lap reinforcement a minimum of one mesh spacing and secure with tie wire at intervals no less than 12 inches.

## 3.04 SHOTCRETE MORTAR APPLICATION

A. Apply mortar in accordance with manufacturer's instructions.

B. Do not reuse rebound materials.

C. Apply mortar utilizing dry mix process.

D. Mortar shall emerge from nozzle in a steady, uninterrupted flow. If flow becomes intermittent, direct flow away from Work until flow of mortar becomes constant.

E. Minimum thickness of applied mortar 1-1/2 inches, or 2 inches of cover over existing reinforcement which ever results in a thicker coat.

F. Slice off excess material with a wire screed approximately 5 to 10 minutes after initial set.

G. Apply finish to exposed mortar surfaces to match existing surfaces and in accordance with manufacturer's instructions. Steel trowel finish when finish coat is not applied. Apply finishing aid full strength.

H. Rebound Removal: Continuously throughout mortar application, remove rebound, sand, and miscellaneous debris. Do not work rebound in under fresh mortar.

I. Nozzle Position: Hold nozzle approximately at right angles to and at a distance from surfaces in accordance with mortar system manufacturer's instructions for type of, application, nozzle, and air pressures used.

J. Reinforcing Steel Encasement: Modify procedure of shooting mortar to better direct material around reinforcement bars. Prevent mortar from building up on reinforcement steel when shooting on, around, through, and behind steel to eliminate voids. Provide dense void-free encasement of reinforcement steel.

K. Shotcreting More than One Layer: In accordance with mortar system manufacturer's instructions.

## 3.05 LOW PRESSURE SPRAY MORTAR APPLICATION

A. Mix mortar in mortar-concrete mixer attached to pump-spray equipment for spray application. Mix with a slow speed drill and jiffler type paddle or small mortar type mixer for hand trowel application.

B. Apply mortar by low pressure spraying with a machine such as Moynotype, MEYCO DEQUNA, Model 20.

C. Finish mortar with a steel trowel finish. Provide finishing aid at full strength.

D. Bonding Agent:

1. Hand apply bonding agent within 20 minutes of troweling on mortar. Prevent bonding agent from drying by reapplying bonding agent to maintain surface tackiness of coat.
2. Work mortar firmly and quickly into area and compact with firm trowel stroke. Finish smooth with finishing aid at full strength.

3.06 POLYMER-MODIFIED REPAIR MORTAR APPLICATION (NONSTRUCTURAL)

A. Mix mortar in mortar-concrete mixer attached to pump-spray equipment for spray application. Mix with a slow speed drill and jiffler type paddle or small mortar type mixer for hand trowel application.

B. Hand Troweling: Apply a bond coat slurry of the repair mortar to the SSD prepared substrate before application of the mortar. Do not apply more of the bond coat than can be covered with mortar before the bond coat dries. Do not retemper this bond coat.

C. Place mortar by hand or low pressure spray and trowel to the specified surface finish.

3.07 CURING

A. Water fog nozzle all of the mortar systems prior to curing in accordance with mortar system manufacturer's instructions.

B. Commence water curing after mortar system application and when curing will not cause erosion of mortar.

C. Continuously cure mortar system for a period of 7 days.

D. Do not membrane cure unless method is part of mortar system manufacturer's instructions, and approval is obtained.

E. Cure intermediate layers of mortar in accordance with manufacturer's instructions.

## 3.08 FIELD QUALITY CONTROL

A. Independent testing laboratory shall perform the following:

1. Secure production samples of mixed materials during construction and test for compliance with the Specifications.
2. Obtain actual core samples from the completed repair Work and test.
3. Perform "modified" ASTM C109 and ASTM C882 test methods in accordance with manufacturer's approved modifications of testing procedures.

B. Construction Testing:

1. Production Samples:
   a. Obtain mixed mortar material from shotcrete or spray equipment and produce samples, and cure samples prior to testing.
   b. Provide minimum of three samples each test for each 1,000 square feet or portion thereof of mortar repair to be installed.
2. Core Samples of In-Place Repair:
   a. Obtain two core samples and test samples for each 2,000 square feet or portion thereof for actual repair Work:
   b. Cores shall be either 2-1/2 inches or 3 inches in diameter and shall be cored through cured mortar repair and into base concrete to total depth equal to at least 2.5 times repair mortar thickness.
   c. Sawcut the cores after removal to trim base concrete thickness to same thickness as mortar so that bond line is at center of repaired sample.
   d. Samples shall be epoxy bonded to steel plates at each end using a bonding agent to prevent failure in bond to steel plates.
   e. Sustain bond line without failure or movement with a minimum of 300 psi in direct tension. The tension test shall use eyebolts or threaded connectors tapped and threaded into baseplate so that tension load is concentric with center of core sample.

C. Repair and fill holes where core samples have been removed using same mortar used in repair.

## 3.09 MANUFACTURER'S SERVICES

A. Provide mortar system manufacturer's representative at Site for installation assistance, inspection and certification of proper installation, and training of mortar system applicators.

B. Mortar System Manufacturer's Demonstration:

1. Schedule a time for manufacturer's demonstration of repair system proposed for the Project. Prepare mortar, to specified consistency, for testing and placement. Initiate curing on portions of each type of surface to be repaired to include overhead and vertical applications.
2. Prepare surface area in advance of demonstration and obtain manufacturer's acceptance of preparation for each type of application.
3. Demonstrate:
   a. Mixing and application equipment capabilities and procedures, including the flow of material from nozzle or sprayer.
   b. Nozzle operator and person in charge of low pressure sprayer, capabilities and ability to follow prescribed application procedures and properly operate equipment and apply surface repair materials.
4. Make compression test samples during demonstration and deliver to an independent testing laboratory for testing at 1, 7, and 28 days. Take a core of the demonstration placement and test for tensile bond at 1 day.

3.10 PROTECTION

A. Protect adjacent surfaces, and equipment, from being damaged by overshooting shotcrete mortar or low pressure spray mortar.

3.11 CLEANING

A. Remove overshot mortar and deposited rebound materials as Work proceeds. Remove from Work, waste materials, unsound material from concrete surfaces, material chipped from walls, water used in preparation of application and finishing.

**END OF SECTION**

# SECTION 03722
# HORIZONTAL CONCRETE SURFACE REPAIR SYSTEMS

## PART 1 GENERAL

### 1.01 SCOPE

A. The work of this section shall be performed where and if required, as directed by the Engineer.

### 1.02 REFERENCES

A. The following is a list of standards which may be referenced in this section:

1. ASTM International (ASTM):
   a. C78, Standard Test Method for Flexural Strength of Concrete.
   b. C109, Standard Test Method for Compressive Strength of Hydraulic Cement Mortars.
   c. C309, Standard Specification for Liquid Membrane-Forming Compounds for Curing Concrete.
   d. C348, Standard Test Method for Flexural Strength of Hydraulic Cement Mortars.
   e. C469, Standard Test Method for Modulus of Elasticity for Cement Mortars.
   f. C496, Standard Test Method for Splitting Tensile Strength of Cylindrical Concrete Specimens.
   g. C596, Standard Test Method of Drying Shrinkage of Mortar Containing Portland Cement.
   h. C672, Standard Test Method for Scaling Resistance for Concrete Surfaces Exposed to Deicing Chemicals.
   i. C779, Standard Test Method for Abrasion Resistance of Horizontal Concrete Surfaces.
   j. C882, Standard Test Method for Bond Strength of Epoxy-Resin Systems used with Concrete by Slant Shear.
   k. C928, Standard Specification for Packaged, Dry, Rapid-Hardening Cementitious Materials for Concrete Repair.
   l. C1012, Standard Test Method for Length Change of Hydraulic Cement Mortars Exposed to a Sulfate Solution.
   m. C1042, Standard Test Method for Bond Strength of Latex Systems Used with Concrete by Slant Shear.
   n. C1202, Standard Test Method for Electrical Indication of Concrete's Ability to Resist Chloride Ion Penetrations.

o. E699, Standard Criteria for Evaluation of Agencies Involved in Testing, Quality Assurance, and Evaluating Building Components in Accordance with Test Methods Promulgated by ASTM Committee E-6.

1.03 SUBMITTALS

A. Action Submittals: Mortar system manufacturer's test and product data.

B. Informational Submittals:

1. Mortar System Manufacturer's:
   a. Certificate of Compliance that repair products are one component with added water only, shrinkage compensated, specially designed for use on horizontal surfaces that are weather exposed, and receive traffic.
   b. Manufacturer's Certificate of Proper Installation.
   c. Recommended preparation and installation instructions.
2. Written test report for each production and core Sample.
3. Statements of Qualification:
   a. Independent Testing Laboratory.
   b. Mortar System Applicator.

1.04 QUALIFICATIONS

A. Independent Testing Laboratory: Meet criteria stated in ASTM E699.

B. Mortar System Applicator: Trained and approved by mortar system manufacturer.

1.05 PACKAGING

A. Package mortar system products in 55-pound moisture-resistance bags, 50-pound pails, or 3,300-pound bulk bags.

**PART 2 PRODUCTS**

2.01 MORTAR SYSTEMS

A. System No. 1:

1. Magnesium-Ammonium-Phosphate Concrete Mortar:
   a. Slant shear bond in accordance with ASTM C882, 1 day, 2,000 psi minimum.

b. Application temperature range from 20 to 100 degrees F.
c. Compressive strength ASTM C109, 1 hour, 2,000 psi minimum.
d. Resistant to freeze-thaw cycles and deicing chemicals.
e. Sulfate resistance in accordance with ASTM C1012, maximum of 0.9 percent length change after 52 weeks.
f. Flexural strength in accordance with ASTM C78, 1 day, 550 psi minimum.
g. Modulus of Elasticity ASTM C469, 7 days, $4.18 \times 10^6$.

2. Manufacturer and Product: Master Builders Technologies; SET45.

B. System No. 2:

1. Slant shear bond in accordance with ASTM C882, 1 day, 2,500 psi minimum.
2. Direct shear bond in accordance with Michigan Department of Transportation, Method of Test for Direct Shear Bond of Concrete Mortars, 1 day, 150 psi minimum.
3. Application temperature range from 20 to 100 degrees F.
4. Compressive strength ASTM C109, 1 day, 4,800 psi minimum.
5. Resistant to freeze-thaw cycles and deicing chemicals.
6. Modulus of Elasticity: ASTM C469, 1 day, $3.8 \times 10^6$.
7. Flexural strength in accordance with ASTM C348, 1 day, 850 psi minimum.
8. Split tensile strength in accordance with ASTM C496, 1 day, 850 psi minimum.
9. Scaling resistance in accordance with ASTM C672 and weight loss in accordance with ASTM C928:
   a. 25 Cycles: CaCl 0.003 and NaCl 0.067, maximum weight loss.
   b. 50 Cycles: CaCl 0.005 and NaCl 0.084, maximum weight loss.
10. Rapid chloride permeability in accordance with ASTM C1202, 28 days, 2,500 coulombs maximum.
11. Manufacturer and Product: Master Builders Technologies; EMACO 415.

C. System No. 3:

1. One-component cement based, rheoplastic, flowable repair mortar system:
   a. Shear bond strength in accordance with ASTM C1042, 7 days, 2,150 psi minimum.
   b. Application temperature range from 40 to 100 degrees F.
   c. Compressive Strength: ASTM C109, 7 days, 6,000 psi minimum.
   d. Resistant to freeze-thaw cycles and deicing chemicals.

e. Flexural strength in accordance with ASTM C78, 28 days, 770 psi minimum.
f. High slump design for improved placement, 4 to 6 inches.
g. Rapid chloride permeability in accordance with ASTM C1202, 1,000 coulombs maximum.
h. Sulfate resistance in accordance with ASTM C1012, maximum 0.006 percent length change after 8 months.
i. Modulus of Elasticity: ASTM C469, 28 days, $4.8 \times 10^6$.

2. Manufacturer and Product: Master Builder Technologies; EMACO S66-CR.

D. System No. 4:

1. One-component cement based, rheoplastic, flowable, metallic-aggregate repair mortar system:
   a. High slump design for improved placement, 5 to 7 inches.
   b. Application temperature range from 40 to 90 degrees F.
   c. Compressive strength ASTM C109, 1 day, 5,000 psi; 7 days, 8,800 psi minimum.
   d. Abrasion resistance 8 times more wear resistance than plain concrete.
   e. Impact resistance four times greater than plain concrete.
   f. Density of 9 pounds per square foot at a minimum of 1/2-inch thickness.
2. Manufacturer and Product: Master Builders Technologies; ANVIL-TOP 300.
3. Bonding Agent Manufacturer and Product: Master Builders Technologies; CONCRESIVE LPL LIQUID when ambient temperature is 72 degrees F or higher, or use ANVIL-BOND.

E. System No. 5:

1. One-Component, Fast-Setting, Polymer Modified Cementitious Based Mortar System:
   a. Bond Strength: ASTM C1042, 7 days, 1,750 psi.
   b. Flexural Strength: ASTM C348, 7 days, 1,000 psi.
   c. Abrasion Resistance: ASTM C779, 60 minutes, 0.0165 inch.
   d. Splitting Tensile Strength: ASTM C496, 7 days, 450 psi.
   e. Drying Shrinkage: ASTM C596, 28 days, 0.093 percent.
   f. Rapid Chloride Permeability: ASTM C1202, 28 days under 500 coulombs.
   g. Compressive Strength: ASTM C109, 1 day, 2,500 psi; 7 days, 5,500 psi; 28 days, 7,500 psi minimum.

2. Manufacturer and Product: Master Builders Technologies; EMACO R310.

2.02 ACCESSORY MATERIALS

A. Flexible Cementitious Reinforcing Bar Coating: Master Builders Technologies; EMACO P22.

B. Epoxy Bonding Agent: Master Builders Technologies; Concresive LPL liquid or Anvil Bond.

C. Finishing Aid:

1. Containing a yellow fugitive dye.
2. Manufacturer and Product: Master Builders Technologies; CONFILM.

D. Membrane Forming Curing Compounds: Master Builders Technologies; MASTERKURE 200W.

2.03 MIXING

A. In accordance with mortar manufacturer's instructions:

**PART 3 EXECUTION**

3.01 APPLICATION

A. System No. 1: Patches, joints, and overlays 1/2 inch to 3 inches thick. Return to service in 1 hour.

B. System No. 2: Patches, joints, or overlays 1/2 inch to 3 inches thick. Return to service in 3 hours to 7 days.

C. System No. 3: Patches, joints, or overlays 1 inch or greater in thickness. Return to service in 7 days or more.

D. System No. 4: Heavy-duty joints or overlays 2 inches thick or more. Return to service in 7 days or more.

E. System No. 5:

1. Patches and overlays 1/4 inch up to 3 inches thick.
2. Return to service for foot traffic in 4 hours; wheel traffic in 7 days.
3. Working time 30 minutes at 70 degrees F (21 degrees C).
4. Application temperature range from 45 degrees F to 90 degrees F.

## 3.02 PREPARATION

A. General:

1. For patch areas 1/4 inch or deeper, follow the International Association of Concrete Repair Specialists, Surface Preparation Guidelines for the Repair of Deteriorated Concrete Resulting From Reinforcing Steel Oxidation.
2. Remove unsound and deteriorated concrete by special 16,000 to 20,000 psi high pressure water blasting machines capable of removing concrete to depths of 3/16-inch minimum amplitude roughness when measured with a straightedge.
3. Square edges of patch areas by sawing or chipping to avoid tapered shoulders.
4. Collect and dispose of water from removal operations in manner and location acceptable to Owner.
5. Remove concrete adjacent to reinforcing bar to a minimum of 1-inch clearance around reinforcing bar to permit new mortar to bond to entire periphery of exposed reinforcing bar if following surface conditions exist:
   a. 50 percent or more of periphery around reinforcing bar is exposed during concrete removal.
   b. 25 percent or more of periphery around reinforcing bar is exposed during concrete removal and corrosion is present to extent that loss of section has occurred.
   c. Otherwise evident that bond between existing concrete and reinforcement has been destroyed.
6. Clean exposed reinforcing bars of rust and concrete.
7. Replace deteriorated reinforcing with new reinforcing equivalent in cross-sectional area to original reinforcing.
8. Coat exposed reinforcing bar with flexible cementitious reinforcing bar coating before repair mortar is applied.
9. Keep areas from which concrete has been removed free of dirt, dust, and water blasting slurry. Remove contaminates from prepared areas before new mortar is placed.
10. Areas to receive mortar system Nos. 1, 2, 3, or 5 shall be saturated, and surface dry at time of application.
11. Areas to receive system No. 4 mortar repair shall be dry.

B. Spalled Joints:

1. Saw edge 1 inch deep and 6 inches back from the old joint.
2. Remove unsound concrete between saw cut and the joint.

3. Place wood or fiber spacer to thickness of joint at joint line.

C. Overlays:

1. Square cut edges to a minimum of 1/4-inch depth.
2. Do not feather edge area.
3. Perform special preparation recommended by mortar manufacturer.

3.03 BONDING

A. Provide a slurry coat of mortar for mortar system Nos. 1, 2, 3, and 5 in accordance with manufacturer's instructions.

B. Provide bonding agent for mortar system No. 4 in accordance with manufacturer's instructions.

3.04 INSTALLATION

A. System Nos. 1, 2, 3, or 5:

1. Remove standing water.
2. Apply bond coat slurry to prepared surface.
3. Immediately place mixed repair mortar into prepared area from one side to the other.
4. Work material firmly into bottom and sides of patch to assure a good bond.
5. Level repair mortar and screed to elevation of existing concrete.
6. Finish to same texture as existing concrete around patch.
7. For system No. 5, screed or use self-leveling mixture to obtain a uniform and plane surface.

B. System No. 4:

1. Blow or vacuum out free water from prepared area.
2. Apply bonding agent to prepared surface. Do not apply more bonding agent than can be covered with mortar before bonding agent cures, past tacky to the touch.
3. Immediately place mixed repair mortar into prepared area from one side to the other.
4. Work material firmly into bottom and sides of patch to assure a good bond.
5. Level repair mortar and screed to elevation of existing concrete.
6. Finish to same texture as existing concrete around patch.

C. Joint Repair:

1. Remove joint spacer when repair mortar is hard enough that a pointed trowel will only penetrate surface less than 1/2 inch.
2. When repair mortar is cured and ready for use, fill joint in accordance with mortar system manufacturer's instructions.

3.05 FINISHING

A. Spray full strength finishing aid on fresh concrete to prevent rapid drying during hot and windy weather.

3.06 CURING

A. System No. 1: Air dry only, do not wet cure.

B. System Nos. 2, 3, 4, or 5:

1. Provide water-based wax emulsion in accordance with moisture retention requirements of ASTM C309, Type 1 when applied at 250 square feet per gallon. Apply in compliance with Federal Air Quality Regulation 40 CFR 52.254.
2. Apply membrane forming curing compound at no more than 250 square feet per gallon, as soon as finishing operation is complete.
3. Apply second coat of curing compound at no more than 250 square feet per gallon, after 3 hours, or when first coat is not tacky to the touch.

3.07 MANUFACTURERS' SERVICES

A. Provide mortar manufacturer's representative at Site for advice on product selection, surface preparation, mixing and installation assistance, and inspection and certification of proper installation.

3.08 TESTS AND INSPECTION

A. Production Samples:

1. Prepare and cure Samples of mixed mortar material from mixer.
2. Provide minimum of three compressive Samples per ASTM C109 for each test specified for each 200 square feet of mortar repair.

B. Chain drag or light hammer tap repaired areas listening for hollow sound to determine areas that have not properly bonded to the old concrete:

1. Mark hollow areas for removal and replacement.
2. Saw hollow sounding areas to a new square edge, and reapply mortar as specified.

C. Core Samples:

1. Core two 2-1/2- or 3-inch diameter Samples for each 2,000 square feet of repair work.
2. Cut cores through cured mortar repair and into base concrete to total depth equal to at least 2.5 times the repair mortar thickness.
3. Sawcut cores after removal to trim base concrete thickness to same thickness as mortar so bond line is at center of prepared Sample.
4. Bond Samples to steelplates at each end using epoxy bonding agent.
5. Perform tension testing using calibrated independent test laboratory equipment and eyebolts or threaded connectors tapped and threaded into the baseplate so that the tension load is concentric with the center of the core Sample.
6. Bond line shall sustain minimum of 300 psi in direct tension without failure or movement.

D. Retest mortar repairs that do not meet test requirements.

E. Fill and repair test holes as specified herein.

**END OF SECTION**

# SECTION 03740
# CONCRETE REPAIR CRACK INJECTION

## PART 1 GENERAL

### 1.01 SCOPE

A. The work of this section shall be performed where and if required, as directed by the Engineer.

### 1.02 REFERENCES

A. The following is a list of standards which may be referenced in this section:

1. American Association of State Highway and Transportation Officials (AASHTO): T237, Standard Method for Testing Epoxy Resin Adhesive.
2. ASTM International (ASTM):
   a. D638, Standard Test Method for Tensile Properties of Plastics.
   b. D648, Standard Test Method for Deflection of Plastics Under Flexural Load.
   c. D695, Standard Test Method for Compressive Properties of Rigid Plastics.
   d. D790, Standard Test Methods for Flexural Properties of Unreinforced and Reinforced Plastics and Electrical Insulating Materials.

### 1.03 DEFINITIONS

A. Large Cracks: Wider than 0.015 inch.

B. Small Cracks: Width equal to 0.015 inch or less.

### 1.04 SUBMITTALS

A. Action Submittals:

1. Physical and chemical properties for epoxy adhesives.
2. Technical data for metering, mixing, and injection equipment.

B. Informational Submittals:

1. Manufacturer's recommended surface preparation procedures and application instructions for epoxy adhesives.
2. Installation instructions for repairing core holes with epoxy grout.

3. Manufacturer's Certificate of Compliance: Certified test results for each batch of epoxy adhesive.
4. Statements of Qualification for Epoxy Adhesive:
   a. Manufacturer's Site representative.
   b. Injection applicator.
   c. Injection pump operating technician.
5. Epoxy adhesive two component ratio and injection pressure test records for concrete crack repair work.

## 1.05 QUALITY ASSURANCE

A. Qualifications for Epoxy Injection Staff:

1. Manufacturer's Site Representative:
   a. Capable of instructing successful methods for restoring concrete structures utilizing epoxy injection process.
   b. Understands and is capable of explaining technical aspects of correct material selection and use.
   c. Experienced in the operation, maintenance, and troubleshooting of application equipment.
2. Injection crew and job foreman shall provide written and verifiable evidence showing compliance with the following requirements:
   a. Licensed and certified by epoxy manufacturer.
   b. Minimum 3 years' experience in successful epoxy injection for at least 10,000 linear feet of successful crack injection including 2,000 linear feet of wet crack injection to stop water leakage.

## 1.06 DELIVERY, STORAGE, AND HANDLING

A. Packing and Shipping: Package adhesive material in new sealed containers and label with following information:

1. Manufacturer's name.
2. Product name and lot number.
3. ANSI Hazard Classification (formerly SPI Classification).
4. ANSI recommended precautions for handling.
5. Mix ratio by volume.

B. Storage and Protection: Store adhesive containers at ambient temperatures below 120 degrees F and above 32 degrees F.

## PART 2 PRODUCTS

### 2.01 MANUFACTURERS

A. Epoxy Manufacturers:

1. Contech Group, Portland, OR, Seattle, WA.
2. Sika Corp., Lyndhurst, NJ.
3. Euclid Chemical Co., Cleveland, OH.

### 2.02 EPOXY ADHESIVE

A. Two-component A and B structural epoxy adhesive for injection into cracks or other voids in concrete structures for bonding or grouting.

B. Component A Properties: Blend of modified epoxy resins as follows:

| | **Test Method** | **Large Cracks** | **Small Cracks*** |
|---|---|---|---|
| **Color** | **Visual** | **Clear Amber Liquid** | **Light Amber Liquid** |
| Viscosity @ 40, plus or minus 3 deg F | Brookfield RVT Spindle No. 4 @ 200 rpm | 8,000 cps, max. | 850 cps, max. |
| Viscosity @ 77, plus or minus 3 deg F | Brookfield RVT Spindle No. 2 @ 20 rpm | 700 cps, max. | 375 cps max. @ 50 rpm |
| *Small crack epoxy blend shall meet requirements for Large Cracks except as shown. | | | |

C. Component B Properties: Modified amine curing agent as follows:

| | **Test Method** | **Large Cracks** | **Small Cracks*** |
|---|---|---|---|
| **Color** | **Visual** | **Black Liquid** | **Black Liquid** |
| Viscosity @ 40, plus or minus 3 deg F, cps | Brookfield RVT Spindle No. 2 @ 20 rpm | 1,400 cps, max. | 550 cps, max. |
| Viscosity @ 77, plus or minus 3 deg F, cps | Brookfield RVT Spindle No. 2 @ 20 rpm | 240 cps, max. | 150 cps max. Using Spindle No. 1 @ 50 rpm |
| *Small crack epoxy blend shall meet requirements for Large Cracks except as shown. | | | |

D. Uncured Adhesive Properties: When mixed in ratio specified on adhesive container label:

| | Test Method | Large Cracks | Small Cracks |
|---|---|---|---|
| Pot Life (60-gram mass) @ plus or minus 4 deg F | As specified in Article Source Quality Control | 13 to 25 minutes | 15 to 30 minutes |
| Pot Life (60-gram mass) @ 100, plus or minus 3 deg F | As specified in Article Source Quality Control | 3 to 10 minutes | 10 to 20 minutes |
| Viscosity @ 40, plus or minus 3 deg F | Brookfield RVT Spindle No. 4 @ 20 rpm | 4,400 cps | 600 cps |
| Viscosity @ 75 to 77 deg F | Brookfield RVT Spindle No. 2 @ 20 rpm | 375 to 350 cps | 175 to 140 cps |

E. Adhesive Properties: When cured for 7 days at 77, plus or minus 3 degrees F and conditioned at test temperature 12 hours prior to test, unless otherwise specified.

| | Test Method | Large Cracks | Small Cracks |
|---|---|---|---|
| Ultimate Tensile Strength, psi | ASTM D638 | 8,000 min. | 5,000 min. |
| Tensile Elongation @ Break, percent | ASTM D638 | 4.2 max. | 3.0 max. |
| Flexural Strength, psi | ASTM D790 | 10,000 min. | 10,000 min. |
| Flexural Modulus, psi | ASTM D790 | $5.5 \times 10^5$ min. | $4.5 \times 10^5$ min. |
| Compressive Yield Strength, psi | ASTM D695* | 15,000 min. | 12,000 min. |
| Compressive Modulus, psi | ASTM D695* | $4.0 \times 10^5$ min. | $4.0 \times 10^5$ min. |
| Heat Deflection Temperature | ASTM D648* | 130 deg F min. | 140 deg F min. |
| Slant Shear Strength: (5,000 psi Compressive Strength Conc.) | AASHTO T 237** | | |
| Cured 3 days @ 40 deg F-Wet Concrete | | | 3,500 psi min. |
| Cured 1 day @ 77 deg F-Dry Concrete | | | 5,000 psi min. |
| Cured 3 days @ 77 deg plus or minus 3 deg F | | | 5,000 psi min. |

| | Test Method | Large Cracks | Small Cracks |
|---|---|---|---|
| *Cure test specimens so that peak exothermic temperature of adhesive does not exceed 100 degrees F | | | |
| **See referenced specifications for preparation method of test specimens | | | |

2.03 SURFACE SEAL

A. Sufficient strength and adhesion for holding injection fittings firmly in-place, and to resist pressures preventing leakage during injection.

B. Capable of removal after injection adhesive has cured.

2.04 SOURCE QUALITY CONTROL

A. Test Requirements: Perform tests for each batch of adhesive.

B. Pot Life Test:

1. Condition Components A and B to required temperature.
2. Measure components in ratio of Component B as stated on manufacturer's label into an 8-fluid-ounce paper cup.
3. Start stopwatch immediately and mix components for 60 seconds using wooden tongue depressor, take care to scrape sides and bottom of cup periodically.
4. Probe mixture once with tongue depressor every 30 seconds, starting 2 minutes prior to minimum specified pot life.
5. Pot Life Definition: Time at which a soft stringy mass forms in center of cup.

C. Fabrication of Slant Shear Specimens for Testing Bond of Injectable Adhesives to Wet Concrete at 40 Degrees F:

1. Scope: Test method for preparation of diagonal concrete mortar blocks used in determining slant shear strength of low viscosity injectable adhesives in accordance with AASHTO T 237 when concrete is wet.
2. Materials:
   a. Diagonal concrete mortar blocks prepared in accordance with AASHTO Test Method T 237 and cured to produce a mortar with compressive strength of 5,000 psi or greater.
   b. Paraffin wax.
   c. Masking Tape: 3/4 inch wide.
   d. Suitable 20-mil thick shim stock.

3. Preparation:
   a. Place a 20-mil shim between diagonal faces of two blocks and align so ends and sides are square.
   b. Bind block with masking tape covering gap between blocks.
   c. Leave a gap between blocks on one face uncovered for removal of shim and application of adhesive.
   d. Paint melted paraffin wax over masking tape.
   e. Shallow dam may be built up around opening using paraffin wax or modeling clay to help retain adhesive.
   f. Apply suitable capping compound to each end of specimen producing smooth surfaces perpendicular to longitudinal axis of block.
   g. Remove shim stock from gap opening.
   h. Soak specimen in water at 40 degrees F, plus or minus 3 degrees F for at least 24 hours.
   i. After soaking, remove specimen, shake free water from surface and gap opening.
   j. Prepare liquid adhesive.
   k. Within 5 minutes after removing specimen from water, start flowing adhesive into crack without entrap air bubbles.
   l. Place specimen in 40 degrees F, plus or minus 3 degrees F ambient for curing within 15 minutes after removing specimen from water for bonding. Do not expose specimen to temperatures beyond 77 degrees F during the 15 minute period.
   m. Cure specimen for 72 hours, plus or minus 4 hours at 40 degrees F, plus or minus 3 degrees F.

## PART 3 EXECUTION

### 3.01 GENERAL

A. Structurally repair cracks in structures as specified in Section 03300, Cast-In-Place Concrete.

B. Cracks:

1. Repair by injection of epoxy adhesive.
2. Repair cracks specified or as shown.

### 3.02 PREPARATION

A. Free cracks from loose matter, dirt, laitance, oil, grease, salt, and other contaminants.

B. Clean cracks in accordance with epoxy adhesive manufacturer's instructions.

C. Clean surfaces adjacent to cracks from dirt, dust, grease, oil, efflorescence, and other foreign matter detrimental to bond of surface seal system.

D. Do not use acids and corrosives for cleaning, unless neutralized prior to injecting epoxy.

3.03 APPLICATION

A. Sealing: Apply surface seal in accordance with manufacturer's instructions to designated crack face prior to injection. Seal surface of crack to prevent escape of injection epoxy.

B. Entry Ports:

1. Establish openings for epoxy entry in surface seal along crack.
2. Determine space between entry ports equal to thickness of concrete member to allow epoxy to penetrate to the full thickness of the wall.
3. Provide a means to prevent concrete dusts and fines from contaminating the crack or ports when drilling.
4. Space entry ports closer together to allow adjustment of injection pressure to obtain minimum loss of epoxy to soil at locations where:
   a. Cracks extend entirely through wall.
   b. Backfill of walls on one side.
   c. Difficult to excavate behind wall to seal both crack surfaces.
5. Core drill to verify epoxy depth where only one side of wall is exposed.

C. Epoxy Injection:

1. Store epoxy at minimum of 70 degrees F.
2. Start injection into each crack at lowest elevation entry port.
3. Continue injection at first port until adhesive begins to flow out of port at next highest elevation.
4. Plug first port and start injection at second port until adhesive flows from next port.
5. Inject entire crack with same sequence.

D. Finishing:

1. Cure epoxy adhesive after cracks have been completely filled to allow surface seal removal without draining or runback of epoxy material from cracks.
2. Remove surface seal from cured injection adhesive.

3. Finish crack face flush with adjacent concrete.
4. Indentations or protrusions caused by placement of entry ports are not acceptable.
5. Remove surface seal material and injection adhesive runs and spills from concrete surfaces.

## 3.04 EQUIPMENT

A. Portable, positive displacement type pumps with in-line metering to meter and mix two adhesive components, and inject mixture into crack.

B. Pumps:

1. Electric or air powered with interlocks providing positive ratio control of proportions for the two components at nozzle.
2. Primary injection pump for each material of different mix ratio, including a standby backup pump of similar ratio.
3. Capable of immediate compensation for changes in resins.
4. Do not use batch mix pumps.

C. Discharge Pressure: Automatic pressure controls capable of discharging mixed adhesive at pressures up to 200 psi, plus or minus 5 percent, and able to maintain pressure.

D. Automatic Shutoff Control: Provide sensors on both Component A and B reservoirs for stopping machine automatically when only one component is being pumped to mixing head.

E. Proportioning Ratio Tolerance: Maintain epoxy adhesive manufacturer's prescribed mix ratio within a tolerance of plus or minus 5 percent by volume at discharge pressure up to 160 psi.

F. Ratio/Pressure Check Device:

1. Two independent valved nozzles capable of controlling flow rate and pressure by opening or closing valve to restrict material flow.
2. Pressure gauge capable of sensing pressure behind each valve.

## 3.05 FIELD QUALITY CONTROL

A. Epoxy Adhesive Two Component Ratio Tests:

1. Disconnect mixing head and pump two adhesive components simultaneously through ratio check device.

2. Adjust discharge pressure to 160 psi for both adhesive components.
3. Simultaneously discharge both adhesive components into separate calibrated containers.
4. Compare amounts simultaneously discharged into calibrated containers during same time period to determine mix ratio.
5. Complete test at 160 psi discharge pressure and repeat procedure for 0 psi discharge pressure.
6. Run ratio test for each injection unit at beginning and end of each injection work day, and when injection work as stop for more than 1-hour.
7. Document and maintain complete accurate records of, ratios and pressure checks.

B. Injection Pressure Test:

1. Disconnect mixing head of injection equipment and connect two adhesive component delivery lines to pressure check device.
2. Pressure Check Device:
   a. Two independent valved nozzles capable of controlling flow rate and pressure by opening or closing of valve.
   b. Pressure gauge capable of sensing pressure buildup behind each valve.
3. Close valves on pressure check device and operate equipment until gauge pressure on each line reads 160 psi.
4. Stop pumps and observe pressure; do not allow pressure gauge to drop below 150 psi within 3 minutes.
5. Run pressure test for each injection equipment unit:
   a. Beginning and end of each injection work day.
   b. When injection work as stop for more than 45 minutes.
6. Check tolerance to verify equipment capable of meeting specified ratio tolerance.

C. Crack Injection Tests:

1. Initial Cores:
   a. 4-inch diameter for full crack depth taken from Engineer selected locations.
   b. Take three cores in first 100 lineal feet of crack repaired and one core sample for each 500 lineal feet thereafter.
2. Provide suitable containers for storage, curing, and transportation of test specimens.
3. Methods of Testing Cores:
   a. Penetration: Visual examination.

b. Bond Strength/Compression Test: Concrete failure prior to adhesive failure.

4. Test Requirements:
   a. Penetration: Minimum of 90 percent of crack shall be full of epoxy adhesive.
   b. Bond Strength/Compression Test: Concrete failure before adhesive failure, or 6,500 psi with no failure of either concrete or adhesive.
5. Evaluation and Acceptance of Tests:
   a. If initial cores pass tests as specified, epoxy adhesive injection Work at area represented by cores will be accepted.
   b. If initial cores fail either by lack of penetration or bond strength, crack repair Work shall not proceed further until areas represented by cores are reinjected or repaired and retested for acceptance.
   c. Obtain verifying core samples, number and location as selected by Engineer, after rework of areas represented by failed initial cores is complete.
6. Core Hole Repair:
   a. Correct Work as result of testing upon notification from Engineer.
   b. Refill initial and verifying core holes with an epoxy grout tamped and rodded in-place to form a dense fill.
   c. Finish surface to blend with adjacent concrete.

**END OF SECTION**

# SECTION 05050
# WELDING

## PART 1 GENERAL

### 1.01 REFERENCES

A. The following is a list of standards which may be referenced in this section:

1. American Society of Mechanical Engineers (ASME):
   a. BPVC SEC V, Nondestructive Examination.
   b. BPVC SEC IX, Qualification Standard for Welding and Brazing Procedures, Welders, Brazers, and Welding and Brazing Operators.
2. American Society of Nondestructive Testing (ASNT): SNT-TC-IA, Personnel Qualification and Certification in Non-destructive Testing.
3. ASTM International (ASTM): A370, Standard Test Methods and Definitions for Mechanical Testing of Steel Products.
4. American Welding Society (AWS):
   a. A2.4, Standard Symbols for Welding, Brazing, and Nondestructive Examination.
   b. A3.0, Standard Welding Terms and Definitions; Including Terms for Adhesive Bonding, Brazing, Soldering, Thermal Cutting and Thermalspraying.
   c. D1.1/D1.1M, Structural Welding Code - Steel.
   d. D1.2/D1.2M, Structural Welding Code - Aluminum.
   e. D1.3, Structural Welding Code - Sheet Steel.
   f. D1.4, Structural Welding Code - Reinforcing Steel.
   g. QC 1, Standard for AWS Certification of Welding Inspectors.

### 1.02 DEFINITIONS

A. CJP: Complete Joint Penetration.

B. CWI: Certified Welding Inspector.

C. MT: Magnetic Particle Testing.

D. NDE: Nondestructive Examination.

E. NDT: Nondestructive Testing.

F. PJP: Partial Joint Penetration.

G. PQR: Procedure Qualification Record.

H. PT: Liquid Penetrant Testing.

I. RT: Radiographic Testing.

J. UT: Ultrasonic Testing.

K. VT: Visual Testing.

L. WPQ: Welder/Welding Operator Performance Qualification.

M. WPS: Welding Procedure Specification.

1.03 SUBMITTALS

A. Shop Drawings:

1. Shop and field WPSs and PQRs.
2. NDT procedure specifications prepared in accordance with ASME BPVC SEC V.
3. Welding Data (Shop and Field):
   a. Show on a weld map complete information regarding base metal specification designation, location, type, size, and extent of welds with reference called out for WPS and NDE numbers in tail of welding symbol.
   b. Distinguish between shop and field welds.
   c. Indicate, by welding symbols or sketches, details of welded joints and preparation of base metal. Provide complete joint welding details showing bevels, groove angles, and root openings for welds.
   d. Welding and NDE symbols shall be in accordance with AWS A2.4.
   e. Welding terms and definitions shall be in accordance with AWS A3.0.
   f. Submit welding data together with shop drawings as a complete package.

B. Informational Submittals:

1. WPQs.
2. CWI credentials.
3. Testing agency personnel credentials.
4. CWI reports.

5. Welding Documentation: Submit on appropriate forms in referenced welding codes.

1.04 QUALIFICATIONS

A. WPSs: In accordance with AWS D1.1/D1.1M (Annex E Forms) or ASME BPVC SEC IX (Forms QW-482 and QW-483).

B. WPQs: In accordance with AWS D1.1/D1.1M (Annex E Forms) or ASME BPVC SEC IX (Form QW-484).

C. CWI: Certified in accordance with AWS QC 1, and having prior experience with the welding codes specified.

D. Testing Agency: Personnel performing tests shall be NDT Level II Certified in accordance with ASNT SNT-TC-1A.

1.05 SEQUENCING AND SCHEDULING

A. Unless otherwise specified, all Submittals required in this Section shall be submitted and approved prior to commencement of welding operations.

**PART 2 PRODUCTS**

2.01 SOURCE QUALITY CONTROL

A. The CWI shall be present whenever shop welding is performed. The CWI shall perform inspection prior to assembly, during assembly, during welding, and after welding. CWI duties include:

1. Verifying conformance of specified job material and proper storage.
2. Monitoring conformance with approved WPS.
3. Monitoring conformance of WPQ.
4. Inspecting weld joint fit-up and in-process inspection.
5. Providing 100 percent visual inspection of welds.
6. Supervising nondestructive testing personnel and evaluating test results.
7. Maintaining records and preparing report confirming results of inspection and testing comply with the Work.

**PART 3 EXECUTION**

3.01 GENERAL

A. Welding and Fabrication by Welding: Conform to governing welding codes referenced in attached Welding and Nondestructive Testing Table.

## 3.02 NONDESTRUCTIVE WELD TESTING REQUIREMENTS

A. Weld Inspection Criteria:

1. Selection of Welds to be Tested: Unless 100 percent NDT is specified herein, as agreed upon between Engineer and Contractor.
2. Unless otherwise specified, perform NDT of welds at a frequency as shown below or in the attached table in accordance with the referenced welding codes as follows. Perform UT on CJP groove welds that cannot be readily radiographed. In case there is a conflict the higher frequency level of NDT shall apply:
   a. CJP Butt Joint Welds: 10 percent random RT.
   b. CJP Groove Welds: 10 percent random UT.
   c. Fillet Welds and PJP Groove Welds: 10 percent random PT or MT.
   d. All Welds: 100 percent VT.
3. Weld Acceptance:
   a. VT:
      1) Structural Pipe and Tubing: AWS D1.1/D1.1M, Paragraph 6.9, Visual Inspection, Tubular Connections.
      2) All Other Structural Steel: AWS D1.1/D1.1M, Paragraph 6.9, Visual Inspection, Statically Loaded Nontubular Connections.
      3) Stud Connections: AWS D1.1/D1.1M, Paragraph 7.8.1.
   b. UT: Perform UT of CJP groove welds in accordance with AWS D1.1/D1.1M, Paragraph 6.13.3, Class R Indications.
   c. RT: Perform RT of CJP butt joint welds in accordance with AWS D1.1/D1.1M, Paragraph 6.12.1.
   d. PT or MT:
      1) Perform on fillet and PJP groove welds in accordance with AWS D1.1/D1.1M, Paragraph 6.10.
      2) Acceptance shall be in accordance with VT standards specified above.

## 3.03 FIELD QUALITY CONTROL

A. The CWI shall be present whenever field welding is performed. The CWI shall perform inspection prior to assembly, during assembly, during welding, and after welding. CWI duties include:

1. Verifying conformance of specified job material and proper storage.
2. Monitoring conformance with approved WPS.
3. Monitoring conformance of WPQ.
4. Inspecting weld joint fit-up and in-process inspection.

5. Providing 100 percent visual inspection of all welds.
6. Supervising nondestructive testing personnel and evaluating test results.
7. Maintaining records and preparing report confirming results of inspection and testing comply with the Work.

3.04 WELD DEFECT REPAIR

A. Repair and retest rejectable weld defects until sound weld metal has been deposited in accordance with appropriate welding codes.

3.05 SUPPLEMENTS

A. The supplement listed below, following "End of Section," is a part of this Specification.

1. Welding and Nondestructive Testing table.

**END OF SECTION**

| WELDING AND NONDESTRUCTIVE TESTING | | | | | | |
|---|---|---|---|---|---|---|
| **Specification Section** | **Governing Welding Codes or Standards** | **Submit WPS** | **Submit WPQ** | **Onsite CWI Req'd** | **Submit Written NDT Procedure Specifications** | **NDT Requirements** |
| 03210 Reinforcing Steel | AWS D1.4, Structural Welding Code–Reinforcing Steel | Yes | Yes | Yes | No | 100% MT of all rebar splices; see Section 03210 |
| 05410 Load Bearing Metal Framing Systems | AWS D1.1/D1.1M, Structural Welding Code Steel or AWS D1.3, Structural Welding Code Sheet Steel | Yes | Yes | Yes | No | 100% VT; see Section 05410 |
| 05500 Metal Fabrications and Castings | AWS D1.1/D1.1M, Structural Welding Code–Steel or AWS D1.2/D1.2M, Structural Welding Code–Aluminum | Yes | Yes | Yes | Yes | 100% VT; see Section 05500 |
| 05520 Handrails | AWS D1.1/D1.1M, Structural Welding Code–Steel or AWS D1.2/D1.2M, Structural Welding Code–Aluminum | No | No | No | No | 100% VT; see Section 05520 |
| 05530 Metal Grating | AWS D1.1/D1.1M, Structural Welding Code–Steel or AWS D1.2/D1.2M, Structural Welding Code–Aluminum | No | No | No | No | 100% VT; see Section 05530 |

# SECTION 05410
# LOAD BEARING METAL FRAMING SYSTEMS

## PART 1 GENERAL

### 1.01 REFERENCES

A. The following is a list of standards which may be referenced in this section:

1. American Iron and Steel Institute (AISI):
   a. Specification for the Design of Cold-Formed Steel Structural Members.
   b. Cold-Formed Steel Design Manual.
   c. Design Guide for Cold-Formed Steel Trusses.
   d. Fasteners for Residential Steel Framing.
2. American Welding Society, Inc. (AWS):
   a. C1.1, Recommended Practices for Resistance Welding.
   b. C1.3, Recommended Practices for Resistance Welding Coated Low Carbon Steels.
   c. D1.3, Structural Welding Code-Sheet Steel.
3. ASTM International (ASTM):
   a. A370, Standard Test Methods and Definitions for Mechanical Testing of Steel Products.
   b. A500, Standard Specification for Cold-Formed Welded and Seamless Carbon Structural Tubing in Rounds and Shapes.
   c. A653/A653M, Standard Specification for Steel Sheet, Zinc-Coated (Galvanized) or Zinc-Iron Alloy-Coated (Galvannealed) by the Hot-Dip Process.
   d. A780, Standard Practice for Repair of Damaged and Uncoated Areas of Hot-Dip Galvanized Coatings.
   e. C954, Standard Specification for Steel Drill Screws for the Application of Gypsum Panel Products or Metal Plaster Bases to Steel Studs from 0.033 in. (0.84 mm) to 0.112 in. (2.84 mm) in Thickness.
   f. C955, Standard Specification for Load-Bearing (Transverse and Axial) Steel Studs, Runners (Tracks), and Bracing or Bridging for Screw Application of Gypsum Panel Products and Metal Plaster Bases.
4. Center for Cold-Formed Steel Structures (CCFSS): Technical Bulletin, Vol. 2, No. 1, February 1993, Screw Connections.
5. International Code Council (ICC): Evaluation Reports for Cold-Formed Steel Framing and Fasteners.

1.02 SUBMITTALS

A. Action Submittals:

1. Plan and elevation views of all metal framing systems, including location and framing of all openings.
2. Material specifications, member sizes, and properties.
3. Details of track, web stiffeners, stud bracing, blocking, bridging, and other members as required to provide a complete installation.
4. Details of connections including welding, mechanical fasteners, and accessory items.
5. Installation and erection instructions, including sequence of operations and requirements for temporary bracing and bridging.

B. Informational Submittals:

1. Manufacturer's installation requirements.
2. Welding Procedures, Qualifications, and Inspection Report: As specified in Section 05050, Welding.
3. Operation manuals for mechanical fastener installation tools.

1.03 QUALITY ASSURANCE

A. General: For member section properties, meet requirements of AISI, Specification for the Design of Cold-Formed Steel Structural Members.

B. Qualifications for Welding: As specified in Section 05050, Welding.

1.04 DELIVERY, STORAGE, AND HANDLING

A. Deliver to Site in bundles marked with name of manufacturer, section type, thickness, grade of material, and length.

B. Store bundles on wood blocking, flat and off ground, to keep clean and to prevent any damage or permanent distortion.

**PART 2 PRODUCTS**

2.01 GENERAL

A. Provide size and type of members as indicated on Drawings.

B. Sheet Steel: ASTM A653/A653M, with G-60 galvanized coating.

C. Cold-Formed Members and Accessories: ASTM C955.

D. Dimensions and Properties: Calculate section properties in accordance with AISI Cold-Formed Steel Design Manual.

2.02 STUDS AND JOISTS

A. Material:

1. ASTM A653/A653M, Structural Steel (SS) Grade 33, or High-Strength Low-Alloy Steel (HSLAS), Type A or B, Grade 50.
2. Section: Type, size, and thickness as indicated on Drawings.
3. Flanges: Stiffened with return lip.
4. Webs:
   a. Studs: Punched.
   b. Joists: Unpunched, unless indicated otherwise on Drawings.

B. Accessories:

1. Track: Size as required to fit over studs, same thickness as stud material, unpunched.
2. Blocking, Bridging, and Fire Stops: Same depth as studs or joists, 0.0566-inch minimum design thickness, unpunched.
3. Bracing Straps, Angle Bracing, Clip Angles: Size and thickness as indicated on Drawings.
4. Mounting Plates: 0.0566-inch minimum design thickness by 8 inches by 18 inches.
5. Accessories shall be from same manufacturer as studs and joists.

C. Manufacturers and Products:

1. AMS, Los Angeles, CA; Angeles Metal Systems.
2. Clark Steel, Middleton, OH; Steel Framing Systems.
3. Dale Industries; Dearborn, MI; Dale/Incor Steel Framing.
4. Dietrich Industries, Pittsburgh, PA; Lightgauge Metal Framing Products.
5. Knorr Steel Framing Systems, Salem, OR; Light Gauge Steel Framing.
6. Marino/Ware, South Plainfield, NJ; Stud-Rite Lightweight Steel Framing Systems.
7. Unimast Incorporated, Schiller Park, IL; Steel Framing Systems.

2.03 MECHANICAL FASTENERS

A. Self-Drilling Screws: Self-drilling, self-tapping screws with hexagonal washer head and corrosion-resistant finish.

1. Manufacturers and Products:
   a. ITW Buildex, Itasca, IL; ICH Traxx Self-Drilling Fasteners with Climaseal Coating and Autotraxx Standup Installation Tool.
   b. Hilti, Inc., Tulsa, OK; Kwik-Pro HWH Self-Drilling Screws with Kwik-Cote Treatment and Kwik-Tapper Screwdriver.

B. Powder-Driven Fasteners:

1. Knurled shank, minimum 1/2-inch diameter steel washer, corrosion-resistant coating.
2. Pin diameter and length to suit deck type and flange thickness of steel support member.
3. Manufacturers and Products:
   a. ITW Buildex, Itasca, IL; Buildex BX14 pins with yellow dichromate galvanizing and BX900 Installation Tool.
   b. Hilti, Inc., Tulsa, OK; ENP-series fasteners with electroplated zinc coating and DX-750 Installation Tool.

2.04 CONCRETE ANCHORS

A. Drilled anchors, size and type as shown on Drawings and as specified in Section 05500, Metal Fabrications and Castings.

2.05 PREFABRICATION

A. Structural wall framing panels may be prefabricated prior to erection.

B. Prefabricated assemblies shall be not more than 1/8 inch out of square within length of assembly and shall be braced against racking. Use jig templates for layout and fabrication.

C. Protect prefabricated panels from damage during handling.

**PART 3 EXECUTION**

3.01 EXAMINATION

A. Inspect all prefabricated assemblies and repair any damage.

B. Examine bearing support surfaces for compliance with requirements for installation tolerances and other conditions affecting performance of metal framing systems.

C. Provide smooth level bearing surfaces for bottom track of load bearing walls.

D. Clean all member and bearing surfaces that will be in contact after assembly.

3.02 INSTALLATION

A. General:

1. Install framing systems as indicated on Drawings, complete and in accordance with manufacturer's recommendations.
2. Provide temporary bracing for support of all construction loads until framing system is installed complete with sheathing or decking.
3. Install framing in true line, plumb, level, and in proper alignment.
4. Cut ends of framing members with saw or shear to bear uniformly against abutting members. Flame cutting is not permitted.
5. All structural framing members shall be full-length without splices, unless indicated otherwise.
6. Fasten members together in accordance with AISI, Cold-Formed Steel Design Manual, Part IV, Connections. Wire tying is not permitted.

B. Stud Bearing Walls:

1. Secure bottom track to floor slab with concrete anchors as indicated on Drawings.
2. Seat studs squarely and firmly within track before securing with fasteners. Gap between end of stud and track shall be less than 1/16 inch.
3. Install studs with spacing as shown and not more than 2 inches from abutting walls.
4. Provide double studs at jambs of openings wider than stud spacing.
5. Provide triple studs at corners and at jambs of openings wider than 48 inches, unless indicated otherwise.
6. Track shall be continuous. Center splices between studs and splice with stud section full length between studs.
7. Frame wall penetrations for pipes and ducts larger than stud spacing to avoid cutting structural members.
8. Fire stop stud walls and partitions with unpunched blocking full width of stud at midpoint or where required for nailers, in conformance with applicable building code.

9. Provide blocking for support of mechanical items.
10. Do not remove the web knockouts within 10 inches of either end of load-bearing studs.
11. Provide bracing straps with gusset plates and anchor holddown assemblies where indicated on Drawings.
12. Tolerances:
    a. Stud Plumbness: 1/8 inch in 10 feet.
    b. Stud Spacing: Plus or minus 1/8 inch.

C. Joists:

1. Position joists directly over bearing studs and attach to track.
2. Joists shall be one-piece within a single span. For multiple spans, lap joists and splice as shown on Drawings.
3. Immediately install bridging and solid blocking to support joists. Maximum spacing of bridging shall be 5 feet.
4. Install web stiffeners where indicated
5. Web Penetrations: Drilled holes for other trades shall be limited to the middle 1/3 of the joist depth within the middle 1/3 of the span, unless indicated otherwise. Minimum spacing between drilled holes shall be 1-1/2 times the joist depth. Notching of joist flanges and flame cutting of holes are not permitted.
6. Tolerances:
    a. Joist Spacing: Plus or minus 1/8 inch.
    b. Joist Levelness: Plus or minus 1/8 inch in 10 feet.

## 3.03 FASTENERS

A. Self-Drilling Screws:

1. Install in accordance with manufacturer's written instructions and with special installation tool.
2. Screw type, diameter, and length shall be in accordance with AISI, Fasteners for Residential Steel Framing, minimum two screws per connection unless indicated otherwise.
3. Use clamp to hold members together. Drive screw from lighter to heavier gauge, to allow plies to be pulled together without stripping metal. Do not over torque. A minimum of three exposed threads shall extend through steel.
4. Minimum screw spacing, end distance, and edge distance shall be 3 diameters.

B. Powder-Driven Fasteners:

1. Use only for connecting cold-formed steel to structural steel members, unless indicated otherwise.
2. Install in accordance with manufacturer's written instructions and with special installation tool.

C. Welded Connections:

1. Welding shall not be used for material thinner than 0.0451 inch.
2. Weld framing members and accessories in accordance with AWS D1.3.
3. Resistance welding for prefabricated framing shall be in accordance with AWS C1.1 and AWS C1.3.
4. Repair galvanized surfaces damaged by welding with zinc-rich spray paint in accordance with ASTM A780.

D. Concrete Anchors: Install in accordance with Section 05500, Metal Fabrications and Castings.

3.04 FIELD QUALITY CONTROL

A. An independent testing agency shall be retained by the Contractor to perform following inspections. Special Inspectors shall be certified by ICC or ICBO to perform these types of inspections.

1. Welded Connections: Visually inspect in accordance with AWS D1.3, Section 7, and as specified in Section 05050, Welding.
2. Mechanical Fasteners: Visually inspect, in accordance with manufacturer's instructions, for each type of fastener.

B. Repair or replace defective welds and fasteners.

**END OF SECTION**

# SECTION 05500
# METAL FABRICATIONS AND CASTINGS

## PART 1 GENERAL

### 1.01 REFERENCES

A. The following is a list of standards which may be referenced in this section:

1. The Aluminum Association, Inc. (AA): The Aluminum Design Manual.
2. American Galvanizers Association (AGA): Inspection of Products Hot-Dip Galvanized After Fabrication.
3. American Institute of Steel Construction (AISC): S329, Allowable Stress Design Specification for Structural Joints using ASTM A325 or A490 Bolts.
4. American Iron and Steel Institute (AISI): Stainless Steel Types.
5. American National Standards Institute (ANSI):
   a. A10.11, Safety Requirements for Personnel and Debris Nets.
   b. A14.3, Ladders - Fixed - Safety Requirements.
6. American Society of Mechanical Engineers (ASME): B1.1, Unified-inch Screw Threads (UN and UNR Thread Form).
7. American Welding Society (AWS):
   a. D1.1, Structural Welding Code - Steel.
   b. D1.2, Structural Welding Code - Aluminum.
   c. D1.6, Structural Welding Code - Stainless Steel.
8. ASTM International (ASTM):
   a. A36/A36M, Specification for Carbon Structural Steel.
   b. A53/A53M, Specification for Pipe, Steel, Black and Hot-Dipped, Zinc-Coated, Welded and Seamless.
   c. A123/A123M, Specification for Zinc (Hot-Dip Galvanized) Coatings on Iron and Steel Products.
   d. A143, Practice for Safeguarding Against Embrittlement of Hot-Dip Galvanized Structural Steel Products and Procedure for Detecting Embrittlement.
   e. A153/A153M, Specification for Zinc Coating (Hot-Dip) on Iron and Steel Hardware.
   f. A193/A193M, Specification for Alloy-Steel and Stainless Steel Bolting Materials for High-Temperature Service.
   g. A194/A194M, Specification for Carbon and Alloy Steel Nuts for Bolts for High-Pressure or High-Temperature Service, or Both.

h. A240/A240M, Specification for Heat-Resisting Chromium and Chromium-Nickel Stainless Steel Plate, Sheet, and Strip for Pressure Vessels.
i. A276, Specification for Stainless Steel Bars and Shapes.
j. A283/A283M, Specification for Low and Intermediate Tensile Strength Carbon Steel Plates.
k. A307, Specification for Carbon Steel Bolts and Studs, 60,000 PSI Tensile.
l. A325, Specification for Structural Bolts, Steel, Heat Treated 120/105 ksi Minimum Tensile Strength.
m. A380, Practice for Cleaning, Descaling, and Passivation of Stainless Steel Parts, Equipment, and Systems.
n. A384, Practice for Safeguarding Against Warpage and Distortion During Hot-Dip Galvanizing of Steel Assemblies.
o. A385, Practice for Providing High-Quality Zinc Coatings (Hot-Dip).
p. A489, Specification for Carbon Steel Lifting Eyes.
q. A500, Specification for Cold-Formed Welded and Seamless Carbon Steel Structural Tubing in Rounds and Shapes.
r. A501, Specification for Hot-Formed Welded and Seamless Carbon Steel Structural Tubing.
s. A563, Specification for Carbon and Alloy Steel Nuts.
t. A653, Specification for Steel Sheet, Zinc-Coated (Galvanized) or Zinc-Iron Alloy-Coated (Galvannealed) by the Hot-Dip Process.
u. A780, Practice for Repair of Damaged and Uncoated Areas of Hot-Dip Galvanized Coatings.
v. A786/A786M, Specification for Hot-Rolled Carbon, Low-Alloy, High-Strength Low-Alloy, and Alloy Steel Floor Plates.
w. A793, Specification for Rolled Floor Plate, Stainless Steel.
x. A967, Specification for Chemical Passivation Treatments for Stainless Steel Parts.
y. A992/A992M, Specification for Steel for Structural Shapes for Use in Building Framing
z. B209, Specification for Aluminum and Aluminum-Alloy Sheet and Plate.
aa. B308/B308M, Specification for Aluminum-Alloy 6061-T6 Standard Structural Profiles.
bb. B429, Specification for Aluminum-Alloy Extruded Structural Pipe and Tube.
cc. B632/B632M, Specification for Aluminum-Alloy Rolled Tread Plate.
dd. F436, Specification for Hardened Steel Washers.

ee. F468, Specification for Nonferrous Bolts, Hex Cap Screws, and Studs for General Use.
ff. F593, Specification for Stainless Steel Bolts, Hex Cap Screws, and Studs.
gg. F594, Specification for Stainless Steel Nuts.
hh. F844, Specification for Washers, Steel, Plain (Flat), Unhardened for General Use.
ii. F1554, Specification for Anchor Bolts, Steel, 36, 55, and 105-ksi Yield Strength.

9. International Code Council (ICC): Evaluation Reports for Concrete and Masonry Anchors.
10. NSF International (NSF).
11. Occupational Safety and Health Administration (OSHA): 29 CFR 1910.27, Fixed Ladders.
12. Specialty Steel Industry of North America (SSINA):
    a. Specifications for Stainless Steel.
    b. Design Guidelines for the Selection and Use of Stainless Steel.
    c. Stainless Steel Fabrication.
    d. Stainless Steel Fasteners.

## 1.02 DEFINITIONS

A. Corrosive Area: Containment area or area exposed to delivery, storage, transfer, or use of chemicals.

B. Exterior Area: Location not protected from the weather by a building or other enclosed structure.

C. Interior Dry Area: Location inside building or structure where floor is not subject to liquid spills or washdown, nor where wall or roof slab is common to a water-holding or earth-retaining structure.

D. Interior Wet Area: Location inside building or structure where floor is sloped to floor drains or gutters and is subject to liquid spills or washdown, or where wall, floor, or roof slab is common to a water-holding or earth-retaining structure.

E. Submerged: Location at or below top of wall of open water-holding structure, such as a basin or channel, or wall, ceiling or floor surface inside a covered water-holding structure, or exterior belowgrade wall or roof surface of water-holding structure, open or covered.

## 1.03 SUBMITTALS

A. Action Submittals:

1. Shop Drawings:
   a. Metal fabrications, including welding and fastener information.
   b. Specific instructions for concrete anchor installation, including drilled hole size, preparation, placement, procedures, and instructions for safe handling of anchoring systems.
2. Samples: Color samples of abrasive stair nosings.

B. Informational Submittals:

1. Concrete and Masonry Drilled Anchors:
   a. Manufacturer's product description and installation procedures.
   b. Current test data or ICC Evaluation Report.
   c. Adhesive Anchor Installer Certification.
2. U-Channel Concrete Inserts:
   a. Manufacturer's product description.
   b. Allowable load tables.
3. Ladders: Certification of load and fatigue tests.
4. Passivation method for stainless steel members.
5. Hot-Dip Galvanizing: Certificate of compliance signed by galvanizer, with description of material processed and ASTM standard used for coating.

## 1.04 QUALITY ASSURANCE

A. Qualifications:

1. Adhesive Anchor Installers: Trained and certified by manufacturer.
2. Galvanized Coating Applicator: Company specializing in hot-dip galvanizing after fabrication and following procedures of Quality Assurance Manual of the American Galvanizers Association.

## 1.05 DELIVERY, STORAGE, AND HANDLING

A. Insofar as practical, factory assemble items specified herein. Assemblies that due to necessity have to be shipped unassembled shall be packaged and tagged in manner that will protect materials from damage and will facilitate identification and field assembly.

B. Package stainless steel items in a manner to provide protection from carbon impregnation.

C. Protect painted coatings and hot-dip galvanized finishes from damage due to metal banding and rough handling. Use padded slings and straps.

D. Store fabricated items in dry area, not in direct contact with ground.

## PART 2 PRODUCTS

### 2.01 GENERAL

A. Unless otherwise indicated, meet the following requirements:

| Item | ASTM Reference |
|---|---|
| Steel Shapes and Plates | A36/A36M |
| Steel Pipe | A501 or A53/A53M, Type E or S, Grade B |
| Structural Steel Tubing | A500, Grade B |
| Stainless Steel: | |
| Bars and Angles | A276, AISI Type 316 |
| Shapes | A276, AISI Type 304 |
| Steel Plate, Sheet, and Strip | A240/A240M, AISI Type 316 |
| Bolts, Threaded Rods, Anchor Bolts, and Anchor Studs | F593, AISI Type 316, Condition CW |
| Nuts | F594, AISI Type 316, Condition CW |
| Steel Bolts and Nuts: | |
| Carbon Steel | A307 bolts, with A563 nuts |
| High-Strength | A325, Type 1 bolts, with A563 nuts |
| Anchor Bolts and Rods | F1554, Grade 55, with weldability supplement S1. |
| Eyebolts | A489 |
| Threaded Rods | A36/A36M |
| Flat Washers (Unhardened) | F844 |
| Flat and Beveled Washers (Hardened) | F436 |

| Item | ASTM Reference |
|---|---|
| Thrust Ties for Steel Pipe: | |
| Threaded Rods | A193/A193M, Grade B7 |
| Nuts | A194/A194M, Grade 2H |
| Plate | A283/A283M, Grade D |
| Aluminum Plates and Structural Shapes | B209 and B308/B308M, Alloy 6061-T6 |
| Aluminum Bolts and Nuts | F468, Alloy 2024-T4 |

B. Bolts, Washers, and Nuts: Use stainless steel, hot-dip galvanized steel, zinc-plated steel, and aluminum material types as indicated in Fastener Schedule at end of this section.

C. Stainless steel to be welded shall conform to AISI Type 316L (or Type 304L for shapes).

2.02 ANCHOR BOLTS AND ANCHOR BOLT SLEEVES

A. Cast-In-Place Anchor Bolts:

1. Headed type, unless otherwise shown on Drawings.
2. Material type and protective coating as shown in Fastener Schedule at end of this section.

B. Anchor Bolt Sleeves:

1. Plastic:
   a. Single unit construction with corrugated sleeve.
   b. Top of sleeve shall be self-threading to provide adjustment of threaded anchor bolt projection.
   c. Material: High density polyethylene.
   d. Manufacturer: Sinco Products, Inc., Middletown, CT, (800) 243-6753.
2. Fabricated Steel: ASTM A36/A36M.

2.03 CONCRETE DRILLED-IN ANCHORS

A. General:

1. AISI Type 316 stainless, hot-dip galvanized, or zinc-plated steel, as shown in Fastener Schedule at end of this section.

2. Current evaluation and acceptance reports by ICC or other similar code organization.
3. Acceptable for use in potable water structures by EPA and local health agencies or NSF.

B. Wedge Anchors:

1. Manufacturers and Products:
   a. ITW Ramset/Red Head, Wood Dale, IL; Trubolt Wedge Anchor.
   b. Hilti, Inc., Tulsa, OK; Kwik-Bolt II Stud Anchor.
   c. Powers Rawl, New Rochelle, NY; Power-Stud Anchor.
   d. Simpson Strong-Tie Co., Inc., Pleasanton, CA; Wedge-All Anchor.
   e. Wej-It Corp., Tulsa, OK; ANKRtite Wedge Anchor.
   f. U.S. Anchor, Pompano Beach, FL; Kingpin Wedge Anchor.
   g. Unitex, Kansas City, MO; Pro-Poxy 300 and Pro-Poxy 300 Fast Epoxy Adhesive Anchors.

C. Expansion Anchors:

1. Self-drilling anchors, snap-off or flush type, zinc-plated.
2. Nondrilling Anchors: Flush type for use with zinc-plated or stainless steel bolt, or stud type with projecting threaded stud.
3. Manufacturers and Products:
   a. ITW Ramset/Red Head, Wood Dale, IL; Multi-Set II Drop-In and Self Drill Anchor.
   b. Hilti, Inc., Tulsa, OK; Hilti HDI Drop-In Anchor.
   c. Powers Rawl, New Rochelle, NY; Steel Drop-In Anchor.
   d. Simpson Strong-Tie Co., Inc., Pleasanton, CA; Drop-In Anchor.

D. Adhesive Anchors:

1. Threaded Rod:
   a. ASTM F593 stainless steel threaded rod, diameter as shown on Drawings.
   b. Length as required, to provide minimum depth of embedment.
   c. Clean and free of grease, oil, or other deleterious material.
2. Adhesive:
   a. Two-component, designed to be used in adverse freeze/thaw environments, with gray color after mixing.
   b. Cure Temperature, Pot Life, and Workability: Compatible for intended use and environmental conditions.

c. Nonsag, with selected viscosity base on installation temperature and overhead application where applicable.

3. Packaging and Storage:
   a. Disposable, self-contained cartridge system capable of dispensing both components in the proper mixing ratio and fitting into a manually or pneumatically operated caulking gun.
   b. Store adhesive cartridges on pallets or shelving in covered storage area, in accordance with manufacturer's written instructions.
   c. Cartridge Markings: Include manufacturer's name, product name, material type, batch or serial number, and adhesive expiration date.
   d. Dispose of cartridges if shelf life has expired.
4. Manufacturers and Products:
   a. ITW Ramset/Red Head, Wood Dale, IL; Epcon Ceramic 6 Epoxy or A7 Adhesive Anchor System. (Use only Epcon A7 Adhesive System for hollow masonry.)
   b. Hilti, Inc., Tulsa, OK; HIT Doweling Anchor System, HIT HY 150 (HIT HY 20 for hollow masonry).
   c. Powers Rawl, New Rochelle, NY; Power Fast Epoxy Injection Gel Cartridge System.
   d. Simpson Strong-Tie Co., Inc., Pleasanton, CA; Epoxy-Tie Adhesive ET or Acrylic-Tie Adhesive. (Use only Acrylic-Tie Adhesive for temperatures below 40 degrees F.)
   e. Covert Operations, Inc., Long Beach, CA; CIA-Gel 7000 Epoxy Anchors.
   f. U.S. Anchor, Pompano Beach, FL; Ultrabond 1.
   g. Unitex, Kansas City, MO; Pro-Poxy 300 and Pro-Poxy 300 Fast Epoxy Adhesive Anchors.

E. Adhesive Threaded Inserts: Stainless steel, internally threaded insert.

1. Manufacturer and Product: Hilti, Inc., Tulsa, OK; HIS-R Insert with HIT HY 150 adhesive.

## 2.04 PIPE SLEEVES

A. As specified in Section 15205, Process Piping Specialties.

## 2.05 EMBEDDED STEEL SUPPORT FRAMES FOR FLOOR PLATE AND GRATING

A. Steel angle support frames to be embedded in concrete shall be stainless steel, ASTM A276, AISI Type 316, unless indicated otherwise.

B. Welded anchors for stainless steel support frames shall also be stainless steel.

2.06 U-CHANNEL CONCRETE INSERTS

A. Rolled ASTM A240/A240M, AISI Type 316 stainless steel, 0.105-inch thickness, 1-5/8-inch width by 1-3/8-inch depth, with stainless steel anchors at 10-inch maximum spacing, styrofoam fillers, and end caps.

B. Nut and Bolt Hardware: Type 316 stainless steel, 5/8-inch minimum diameter unless indicated otherwise, manufacturer's standard to match insert.

C. Manufacturers and Products:

1. Power-Strut, Wayne, MI; PS 349 Series.
2. B-Line Systems, Inc., Highland, IL; B32 Series.
3. Halfen Anchoring Systems, Converse, TX; Channel Type 4141HTA.

2.07 ABRASIVE NOSING FOR STAIRS

A. Unless otherwise shown on Drawings, furnish flush type abrasive nosings on stairs.

B. Nosing Components:

1. Homogeneous epoxy abrasive, with minimum 50 percent aluminum oxide content, formed and cured upon an extruded aluminum base.
2. Epoxy abrasive shall extend over and form curved front edge of nosing.
3. Base of Nosing: Extruded aluminum alloy, 6063-T5, heat-treated.

C. Anchoring System: Double-set anchors consisting of two rows of integrally extruded anchors.

D. Size: 3 inches wide by 1/4 to 3/8 inch thick by length as shown.

E. Color: Selected by Engineer from manufacturer's standard color range.

F. Manufacturers and Products:

1. Wooster Products, Inc., Wooster, OH; Spectra Type WP3C.
2. American Safety Tread Co., Inc., Helena, AL; Type FA-311D.

## 2.08 FLOOR PLATE

A. Material:

1. Galvanized Steel: Carbon steel, ASTM A786/A786M, commercial grade, hot-dip galvanized after fabrication in accordance with ASTM A123/A123M.
2. Stainless Steel: ASTM A793, AISI Type 304.
3. Aluminum: ASTM B632/B632M, Alloy 6061-T6.

B. Minimum Thickness:

1. Steel: 1/4 inch, unless shown otherwise on Drawings.
2. Aluminum: 3/8 inch, unless shown otherwise on Drawings.

C. Surface shall be raised-lug pattern or diamond tread, unless shown otherwise on Drawings.

D. Slip-Resistant Surface: Provide where indicated on Drawings.

1. Manufacturers and Products:
   a. IKG/Borden, Clark, NJ; MEBAC 2.
   b. W.S. Molnar Co., Detroit, MI; SLIPNOT Grade 2-Medium.

## 2.09 LADDERS

A. Fabricate ladders with rails, rungs, landings, and cages to meet applicable requirements of OSHA, CFR Part 1910.27, and ANSI A14.3.

1. Concentrated load of 250 pounds plus 30 percent impact on rungs.
2. Maximum rung deflection of l/360.
3. Concentrated load of 250 pounds plus 30 percent impact between consecutive attachments.
4. Self-closing gates at landings.

B. Aluminum Pre-Engineered Pipe Ladders:

1. Rungs:
   a. Aluminum extrusions of Alloy 6063-T6.
   b. Nonslip grip surface, 1-inch wide flat top, and semicircular bottom with mill finish.
   c. Diamondback, finish to match rails, as manufactured by Alcoa Building Products, Inc., Sidney, OH.

2. Side Rails: ASTM B429, Alloy 6063-T6, 1-1/2 inches, Schedule 40 pipe with anodized finish, AA M32-C22-A41.
3. Fasteners for Ladder Attachments and Cage Assembly: Stainless steel.
4. Welded, pop riveted, or glued construction is not acceptable.
5. Fabricate to longest length as practical but not to exceed 24 feet.
6. Furnish support attachments to side rails at 6 feet maximum spacing.
7. Manufacturer: Thompson Fabricating Co. Inc., Tarrant, AL.

## 2.10 ACCESSORIES

A. Antiseizing Lubricant for Stainless Steel Threaded Connections:

1. Suitable for potable water supply.
2. Resists washout.
3. Manufacturers and Products:
   a. Bostik, Middleton, MA; Neverseez.
   b. Saf-T-Eze Div., STL Corp., Lombard, IL; Anti-Seize.

## 2.11 FABRICATION

A. General:

1. Finish exposed surfaces smooth, sharp, and to well-defined lines.
2. Furnish necessary rabbets, lugs, and brackets so work can be assembled in neat, substantial manner.
3. Conceal fastenings where practical; where exposed, flush countersink.
4. Drill metalwork and countersink holes as required for attaching hardware or other materials.
5. Grind cut edges smooth and straight. Round sharp edges to small uniform radius. Grind burrs, jagged edges, and surface defects smooth.
6. Fit and assemble in largest practical sections for delivery to Site.

B. Materials:

1. Use steel shapes, unless otherwise noted.
2. Steel to be hot-dip galvanized: Limit silicon content to less than 0.04 percent or to between 0.15 and 0.25 percent.
3. Fabricate aluminum in accordance with AA Specifications for Aluminum Structures – Allowable Stress Design.

C. Welding:

1. Weld connections and grind exposed welds smooth. When required to be watertight, make welds continuous.

2. Welded fabrications shall be free from twisting or distortion caused by improper welding techniques.
3. Steel: Meet fabrication requirements of AWS D1.1, Section 5.
4. Aluminum: Meet requirements of AWS D1.2.
5. Stainless Steel: Meet requirements of AWS D1.6.
6. Welded Anchor Studs: Prepare surface to be welded and weld with stud welding gun in accordance with AWS D1.1, Section 7, and manufacturer's instructions.
7. Complete welding before applying finish.

D. Painting:

1. Shop prime with rust-inhibitive primer as specified in Section 09900, Painting and Protective Coatings, unless otherwise indicated.
2. Coat surfaces of galvanized steel and aluminum fabricated items to be in direct contact with concrete, grout, masonry, or dissimilar metals, as specified in Section 09900, Painting and Protective Coatings, unless indicated otherwise.
3. Do not apply protective coating to galvanized steel anchor bolts or galvanized steel welded anchor studs, unless indicated otherwise.

E. Galvanizing:

1. Fabricate steel to be galvanized in accordance with ASTM A143, ASTM A384, and ASTM A385. Avoid fabrication techniques that could cause distortion or embrittlement of the steel.
2. Provide venting and drain holes for tubular members and fabricated assemblies in accordance with ASTM A385.
3. Remove welding slag, splatter, burrs, grease, oil, paint, lacquer, and other deleterious material prior to delivery for galvanizing.
4. Remove by blast cleaning or other methods surface contaminants and coatings not removable by normal chemical cleaning process in the galvanizing operation.
5. Hot-dip galvanize steel members, fabrications, and assemblies after fabrication in accordance with ASTM A123/A123M.
6. Hot-dip galvanize bolts, nuts, washers, and hardware components in accordance with ASTM A153/A153M. Oversize holes to allow for zinc alloy growth. Shop assemble bolts and nuts.
7. Galvanized steel sheets in accordance with ASTM A653.
8. Galvanize components of bolted assemblies separately before assembly. Galvanizing of tapped holes is not required.

F. Watertight Seal: Where required or shown, furnish neoprene gasket of a type that is satisfactory for use in contact with naphthalene. Cover full bearing surfaces.

G. Fitting: Where movement of fabrications is required or shown, cut, fit, and align items for smooth operation. Make corners square and opposite sides parallel.

H. Accessories: Furnish as required for a complete installation. Fasten by welding or with stainless steel bolts or screws.

2.12 SOURCE QUALITY CONTROL

A. Visually inspect all fabrication welds and correct any deficiencies.

1. Steel: AWS D1.1, Section 6 and Table 6.1, Visual Inspection Acceptance Criteria.
2. Aluminum: AWS D1.2.
3. Stainless Steel: AWS D1.6.

B. Hot-Dip Galvanizing:

1. An independent testing agency will be retained by Owner to inspect and test hot-dip galvanized fabricated items in accordance with ASTM A123/A153M and ASTM A153/A153M.
2. Visually inspect and test for thickness and adhesion of zinc coating for minimum of three test samples from each lot in accordance with ASTM A123/A123M and ASTM A153/A153M.
3. Reject and retest nonconforming articles in accordance with ASTM A123/A123M and ASTM A153/A153M.

**PART 3 EXECUTION**

3.01 INSTALLATION OF METAL FABRICATIONS

A. General:

1. Install metal fabrications plumb or level, accurately fitted, free from distortion or defects.
2. Install rigid, substantial, and neat in appearance.
3. Install manufactured products in accordance with manufacturer's recommendations.
4. Obtain Engineer approval prior to field cutting steel members or making adjustments not scheduled.

B. Aluminum:

1. Do not remove mill markings from concealed surfaces.
2. Remove inked or painted identification marks on exposed surfaces not otherwise coated after installed material has been inspected and approved.
3. Fabrication, mechanical connections, and welded construction shall be in accordance with the AA Aluminum Design Manual.

C. Pipe Sleeves:

1. Provide where pipes pass through concrete.
2. Holes drilled with a rotary drill may be provided in lieu of sleeves in existing walls.
3. Provide a center flange for water stoppage on sleeves in exterior or water-bearing walls.
4. Provide a caulking sealant or a modular mechanical unit to form a watertight seal in the annular space between pipes and sleeves.

3.02 CAST-IN-PLACE ANCHOR BOLTS

A. Accurately locate and hold anchor bolts in place with templates at the time concrete is placed.

B. Use anchor bolt sleeves for location adjustment and provide two nuts and one washer per bolt of same material as bolt.

C. Minimum Bolt Size: 1/2-inch diameter by 12 inches long, unless otherwise shown.

3.03 CONCRETE DRILLED-IN ANCHORS

A. Begin installation only after concrete to receive anchors has attained design strength.

B. Install in accordance with manufacturer's instructions.

C. Provide minimum embedment, edge distance, and spacing as follows, unless indicated otherwise by anchor manufacturer's instructions or shown otherwise on Drawings:

| Anchor Type | Min. Embedment (bolt diameters) | Min. Edge Distance (bolt diameters) | Min. Spacing (bolt diameters) |
|---|---|---|---|
| Wedge | 9 | 6 | 12 |
| Expansion and Sleeve | 4 | 6 | 12 |
| Adhesive | 9 | 9 | 13.5 |

D. Use only drill type and bit type and diameter recommended by anchor manufacturer. Clean hole of debris and dust with brush and compressed air.

E. For undercut anchors, use special undercutting drill bit and rotary hammer drill and apply final torque as recommended by anchor manufacturer.

F. When embedded steel or rebar is encountered in the drill path, slant drill to clear obstruction. If drill must be slanted more than 10 degrees to clear obstruction, notify Engineer for direction on how to proceed.

G. Adhesive Anchors:

1. Do not install adhesive anchors when temperature of concrete is below 40 degrees F (25 degrees F for Simpson Strong-Tie Acrylic-Tie Adhesive) or above 100 degrees F.
2. Remove any standing water from hole with oil-free compressed air. Inside surface of hole shall be dry where required by manufacturer's instructions.
3. Do not disturb anchor during recommended curing time.
4. Do not exceed maximum torque as specified in manufacturer's instructions.

3.04 U-CHANNEL CONCRETE INSERTS

A. Provide as indicated for pipe supports and where otherwise shown on Drawings.

B. Except for interior dry areas, use plastic clips or similar dielectric material to isolate channel anchors from concrete reinforcing steel.

3.05 ABRASIVE NOSINGS

A. Provide abrasive nosings on concrete steps.

## 3.06 ELECTROLYTIC PROTECTION

A. Aluminum:

1. Coat surfaces of aluminum fabricated items to be in direct contact with concrete, grout, masonry, or dissimilar metals, as specified in Section 09900, Painting and Protective Coatings, unless indicated otherwise.
2. Do not apply protective coating to galvanized steel anchor bolts, unless indicated otherwise.
3. Allow coating to dry before installation of the material.
4. Protect coated surfaces during installation.
5. Should coating become marred, prepare and touch up in accordance with paint manufacturer's written instructions.

B. Stainless Steel:

1. During handling and installation, take necessary precautions to prevent carbon impregnation of stainless steel members.
2. After installation, visually inspect stainless steel surfaces for evidence of iron rust, oil, paint, and other forms of contamination.
3. Remove contamination in accordance with requirements of ASTM A380 and ASTM A967.
4. Brushes used to remove foreign substances shall utilize only stainless steel or nonmetallic bristles.
5. After treatment, visually inspect surfaces for compliance.

## 3.07 PAINTING AND REPAIR OF GALVANIZED STEEL

A. Painted Galvanized Surfaces: Prepare as specified in Section 09900, Painting and Protective Coatings.

B. Repair of Damaged Hot-Dip Galvanized Coating:

1. Conform to ASTM A780.
2. For minor repairs at abraded areas, use sprayed zinc conforming to ASTM A780.
3. For flame cut or welded areas, use zinc-based solder, or zinc sticks, conforming to ASTM A780.
4. Use magnetic gauge to determine that thickness is equal to or greater than the base galvanized coating.

## 3.08 FIELD QUALITY CONTROL

A. Concrete Drilled Anchors: Special inspection and testing shall be provided by the Contractor where indicated on Drawings. Special Inspectors shall be certified by ICC or ICBO to inspect drilled-in anchors.

## 3.09 MANUFACTURER'S SERVICES

A. Adhesive Anchors: Conduct site training of installation personnel for proper installation, handling, and storage of adhesive anchor system. Notify Engineer of time and place for sessions.

## 3.10 FASTENER SCHEDULE

A. Provide fasteners as follows:

| **Service Use and Location** | **Product** | **Remarks** |
|---|---|---|
| 1. Anchor Bolts Cast Into Concrete for Structural Steel Column Base Plates | | |
| Exterior and Interior Areas | AISI Type 316 stainless steel headed anchor bolts. | |
| 2. Anchor Bolts Cast Into Concrete for Equipment Bases | | |
| Submerged, Exterior, Interior, and Corrosive Areas | Stainless steel headed anchor bolts with fusion bonded coating, unless otherwise specified with equipment. | See Section 09900, Painting and Protective Coatings |
| 3. Anchor Bolts Cast Into Concrete for Metal Fabrications and Structural Components | | |
| Interior Nonprocess Areas | Stainless steel headed anchor bolts. | |
| Submerged, Exterior, Interior Process, and Corrosive Areas | Stainless steel headed anchor bolts with fusion bonded coating. | See Section 09900, Painting and Protective Coatings |

| Service Use and Location | Product | Remarks |
|---|---|---|
| 4. Drilled Anchors for Metal Components to Cast-in-Place Concrete (e.g., Ladders, Handrail Posts, Electrical Panels, and Equipment) | | |
| Interior Nonprocess Areas | Zinc-plated or stainless steel wedge or expansion anchors. | |
| Submerged, Exterior, Interior Process, and Corrosive Areas | Adhesive stainless steel anchors. | |
| 5. Connections for Steel Framing | | |
| Exterior and Interior Wet and Dry Areas | High-strength steel bolted connections | Use hot-dipped galvanized high-strength bolted connections for galvanized steel framing members |
| 6. Connections of Aluminum Components | | |
| Submerged, Exterior and Interior Wet and Dry Areas | Stainless steel bolted connections, unless otherwise specified with equipment | |
| 7. All Others | | |
| Exterior and Interior Wet and Dry Areas | Stainless steel fasteners | |

B. Antiseizing Lubricant: Use on all stainless steel threads.

C. Do not use adhesive anchors to support fire-resistive construction or where ambient temperature will exceed 120 degrees F.

**END OF SECTION**

# SECTION 05520
# HANDRAILS

## PART 1 GENERAL

### 1.01 REFERENCES

A. The following is a list of standards which may be referenced in this section:

1. Aluminum Association, Incorporated (AA): 45, Designation System for Aluminum Finishes.
2. American Iron and Steel Institute (AISI): SS306, Stainless Steel for Building Exteriors.
3. ASTM International (ASTM):
   a. A36/A36M, Standard Specification for Structural Steel.
   b. A53/A53M, Standard Specification for Pipe, Steel, Black and Hot-Dipped, Zinc-Coated Welded and Seamless.
   c. A123/A123M, Standard Specification for Zinc (Hot-Galvanized) Coatings on Iron and Steel Products.
   d. A167, Standard Specification for Stainless and Heat-Resisting Chromium-Nickel Steel Plate, Sheet, and Strip.
   e. A193/A193M, Standard Specification for Alloy-Steel and Stainless Steel Bolting Materials for High-Temperature Service.
   f. A194/A194M, Standard Specification for Carbon and Alloy Steel Nuts for Bolts for High-Pressure or High-Temperature Service, or Both.
   g. A501, Standard Specification for Hot-Formed Welded and Seamless Carbon Steel Structural Tubing.
   h. A554, Standard Specification for Welded Stainless Steel Mechanical Tubing.
   i. E985, Standard Specification for Permanent Metal Railing Systems and Rails for Buildings.
4. International Code Council (ICC): International Building Code (IBC).
5. Occupational Safety and Health Act (OSHA): 29 CFR 1910, Code of Federal Regulations.

### 1.02 DEFINITIONS

A. Handrails: Synonymous with terms; i.e., guardrail system, railing system, ramp-rail system, and stair-rail system. Handrails are comprised of a framework of vertical, horizontal, or inclined members, grillwork or panels, accessories, or combination thereof.

B. Toeboards: Vertical barrier at floor level usually erected on handrails along exposed edges of floor or wall openings, platforms, ramps, or stairs to prevent miscellaneous items from falling through.

C. ICBO Legacy Reports: Published by ICC for concrete anchor manufacturers.

D. Special Inspection: As governed by the ICC IBC.

1.03 SUBMITTALS

A. Action Submittals:

1. Shop Drawings:
   a. Indicate handrail profiles, sizes, connections, anchorage, size and type of fasteners, and accessories. Project-specific scale plans and elevations of handrails.
   b. Manufacturer's literature and catalog data of handrail and components.
   c. Design Data: Calculations or test data using design performance loads and include the following:
      1) Bending stress in, and deflection of, posts in accordance with ASTM E985.
      2) Stress in post base connection.
      3) Calculation of anchorage forces and comparison of these forces to ICC International Building Code recommendations regarding safe allowable design loads of anchorages.
      4) For concrete anchor spacings less than 12 anchor diameters and edge distances less than six anchor diameters, make reduction in allowable pullout and shear values. Use published ICBO Legacy Report values for anchors without Special Inspection; or provide independent laboratory inspection service for ICBO Legacy Report values with Special Inspection.
2. Samples:
   a. Railing sections, 6 inches long showing different connections and proposed finish.
   b. Each fitting including wall brackets, castings, toeboard fittings, and rail expansion joints.

B. Informational Submittals:

1. Manufacturer's assembly and installation instructions.

2. Special Inspection:
   a. Manufacturer's instructions for Special Inspection of concrete anchors.
   b. Special Inspection report in accordance with Article Tests and Inspections.
3. Manufacturer's Certificate of Proper Installation.
4. Manufacturer's written recommendations describing procedures for maintaining handrails including cleaning materials, application methods, and precautions to be taken in the use of cleaning materials.
5. Test Reports: Test data may supplement load calculations providing data covers the complete handrail system, including anchorage:
   a. Test data for handrail and components showing load and deflection due to load, in enough detail to prove handrail is strong enough and satisfies national, state, local standards, regulations, code requirements, and OSHA 29 CFR 1910, using design loads specified. Include test data for the following:
      1) Railing and post connections.
      2) Railing wall connections.
      3) Post and base connections.
      4) Railing expansion joint connections.
      5) Railing gate assembly, including latch and gate stop. Both gate latch and stop to support required loads applied, independent of each other.
      6) Railing gate hinges.
   b. Deflection Criteria: In accordance with ASTM E985 and design loads specified.
   c. Aluminum Rail Piping: Test data showing yield strength of pipe as-delivered equals or exceeds values specified in this Section.
   d. Concrete Anchors: Calculations and test data for review prior to use, on anchors other than those specified.

## 1.04 QUALITY ASSURANCE

A. Qualifications: Calculations required for design data stamped by a registered engineer licensed in the state where the Project will be constructed.

## 1.05 DELIVERY, STORAGE, AND HANDLING

A. Handrails adequately packaged and wrapped to prevent scratching and denting during shipment, storage, and installation. Maintain protective wrapping until railing is completely installed.

B. Aluminum Handrails:

1. Shop assemble into practical modules of lengths not exceeding 24 feet for shipment.
2. Deliver toeboards loose for field assembly.
3. Deliver clear anodized handrail pipe and posts with protective plastic wrap.

1.06 ENVIRONMENTAL REQUIREMENTS

A. Thermal Movements: Allow for thermal movement resulting from the following maximum range in ambient temperature in design, fabrication, and installation of handrails to prevent buckling, opening up of joints, over stressing of components, connections and other detrimental effects. Base design calculation on actual surface temperatures of materials due to both solar heat gain and night time sky heat loss. Temperature change is difference between high or low temperature and installation temperature.

1. Temperature Change Range: 70 degrees F, ambient; 100 degrees F, material surfaces.

**PART 2 PRODUCTS**

2.01 DESIGN PERFORMANCE

A. Structural Performance of Handrails: Design, test, fabricate, and install handrails to withstand the following structural loads without exceeding allowable design working stress or allowable deflection. Apply each load to produce maximum stress and deflection in each of the respective components comprising handrails.

1. Top Rail of Handrails: Capable of withstanding the following load cases applied:
   a. Concentrated load of 200 pounds applied at any point and in any direction in accordance with OSHA and ICC IBC.
   b. Uniform load of 50 pounds per linear foot applied horizontally in accordance with ICC IBC.
   c. Concentrated load need not be assumed to act concurrently with uniform loads in accordance with ICC IBC.
2. In-Fill Area of Railing Systems:
   a. Capable of withstanding a horizontal concentrated load of 200 pounds applied to 1 square foot at any point in the system including panels, intermediate rails, balusters, or other elements composing the in-fill area.

b. Horizontal concentrated load need not be assumed to act concurrently with loads on top rails of handrails.

3. Mid-rails with corner returns to withstand a 300 pound concentrated vertical load applied at any point or direction without damage and loosening of pipe, fittings, or attachment hardware.
4. Concrete Anchors for Handrail Wall Brackets: Anchors with a strength required by calculations with concrete strength assumed at 4,000 psi and not exceeding ICC IBC allowable loads for actual spacing, edge distance, and embedment.
5. Concrete Anchors: In accordance with ICC IBC allowable load values for size, length, embedment, spacing, and edge distance to match required loads shown in calculations.

## 2.02 ALUMINUM HANDRAILS

A. General:

1. Furnish pre-engineered and prefabricated three-rail handrails.
2. Pop rivets and glued railing construction not permitted.

B. Manufacturers:

1. Thompson Fabricating Co., Birmingham, AL.
2. Moultrie Manufacturing, Moultrie, GA; Wesrail II.
3. No "or-equal" or substitute products will be considered.

C. Rails, Posts, and Formed Elbows: Extruded Alloy 6105-T5 or 6061-T6, minimum tensile strength of 38,000 psi and minimum yield strength of 35,000 psi.

1. Miscellaneous Aluminum Parts: 6063-T6 or 6061-T6 extruded aluminum of adequate strength for all loads.
2. Post and Railing: Nominal 1-1/2 inch diameter.
   a. Rails: 1.900-inch outside diameter by 0.145-inch wall thickness, Schedule 40.
   b. Posts: 1.900-inch outside diameter by 0.200-inch wall thickness, Schedule 80.
   c. Solid dowel interconnectors of 6105-T5 or 6061-T6 aluminum.

D. Fittings:

1. Handrail and Post Fittings: Extruded, machined bar stock, permanent mold castings, or die castings of sufficient strength to meet load requirements. Fittings shall match color of pipe in handrails. Sand cast parts not permitted.

2. Concrete Top Mount Post Base: Four holes in base for concrete anchors. For narrow walls or curbs, furnish two holes in base for concrete anchors with required edge distance.
   a. Manufacturers and Products:
      1) Thompson Fabricating Co.; Part No. TBF-3.4 and Part No. TBF-3.2 for narrow walls and curbs.
      2) Moultrie Manufacturing Co.; Part No. WII4HB and WII2HB for narrow walls and curbs
3. Concrete Side Mounted Handrail Bracket: Extruded aluminum, Alloy 6063-T6 with four holes for bolts or concrete anchors.
   a. Manufacturers and Products:
      1) Thompson Fabricating Co.; Part No. TSM-1.5.
      2) Moultrie Manufacturing Co.; Part No. WIISMB.
4. Concrete Anchors for Securing Bases and Brackets to Concrete: Type 304 or Type 316 stainless steel 1/2-inch concrete anchors.
5. Handrail Connections for Metal Stairway Stringers:
   a. Extruded aluminum bracket, Alloy 6063-T6.
   b. Brackets bolts 1/2-inch diameter Type 304 or Type 316 stainless steel bolts.
   c. Offset Adjustable Stair Fitting:
      1) Thompson Fabricating Co.; Part No. ASF of cast Al-mag.
      2) Moultrie Manufacturing Co.; Standard and custom elbow angles, Part No. W51XXX (numbers vary based on angle).
   d. Additional Offset Adjustable Fitting for Picket Railing System: Thompson Fabricating Co.; Part No. APF of cast Al-mag.
   e. Base Connection:
      1) Manufacturers and Products:
         a) Thompson Fabricating Co.; Part Nos. SMB-2 or SMB-3, ASF, APF.
         b) Moultrie Manufacturing Co.; Part No. WIISMBEXT.
6. Handrail Connections for Metal Beams:
   a. Extruded aluminum bracket, Alloy 6063-T6.
   b. Bracket bolts 1/2-inch diameter Type 304 stainless steel bolts.
   c. Manufacturers and Products:
      1) Thompson Fabricating Co.; Part Nos. SMB-2 or SMB-3. Use Part No. TSM-1.5 if bracket is attached to flat side of channel.
      2) Moultrie Manufacturing Co.; Part No. WIISMBEXT. Use Part No. WIISMB if bracket is attached to flat side of channel.

7. Handrail Wall Brackets: Adjustable wall fitting, with provision for three 3/8-inch Type 304 stainless steel bolts or concrete anchors.
   a. Manufacturers and Products:
      1) Thompson Fabricating Co.; Part No. AWF cast Al-mag aluminum bracket.
      2) Moultrie Manufacturing Co.; Part No. W41100.
8. Miscellaneous Rail to Post Fittings:
   a. Aluminum Tee Fittings:
      1) Manufacturers and Products:
         a) Thompson Fabricating Co.; Part Nos. TF-1 and TX-1.
         b) Moultrie Manufacturing Co.; Part Nos. WIIT40, WIIT40/05, WIIT80, and WIIT80/05
   b. Aluminum Ell Fittings:
      1) Manufacturers and Products:
         a) Thompson Fabricating Co.; Part Nos. TE-1, TE-2, and TE-3.
         b) Moultrie Manufacturing Co.; Part No. 51900.
   c. Aluminum Splice Lock:
      1) Manufacturers and Products:
         a) Thompson Fabricating Co.; Part No. SL-1.
         b) Moultrie Manufacturing Co.; Part No. WIIS40
   d. Aluminum Expansion Joint Splice:
      1) Manufacturers and Products:
         a) Thompson Fabricating Co.; Part No. ES-1.
         b) Moultrie Manufacturing Co.; Part No. WII40, omit set screws on one side.
   e. Formed Aluminum Wall Flange:
      1) Manufacturers and Products:
         a) Thompson Fabricating Co.; Part No. CF-2.
         b) Moultrie Manufacturing Co.; Part No. 41250.
9. Handrail Gate: 6063-T6, 6105-T5, or 6061-T6 extruded aluminum.
   a. Hardware Manufacturers and Products:
      1) Julius Blum & Co., Inc., Carlstadt, NJ; No. 782/3 gate hinges with springs, and No. 784 gate latch and stop.
      2) CraneVeyor Corp., South El Monte, CA; No. C4370b gate hinges with spring, No. C4369 gate latch, and No. C4368 gate stop.
      3) Thompson Fabricating Co., Birmingham, AL.
      4) Moultrie Manufacturing Co., Moultrie, GA; Part No. W60006
10. In-Fill Area Picket and Attachments:
   a. 1/2-inch Schedule 40 aluminum pipe (picket). Alloy 6105, 6063, or 6061.

b. Extruded aluminum 1-1/2-inch by 7/8-inch by 1/8-inch channel. Alloy 6105, 6063, or 6061.
c. Fittings for Offset Stair Railings:
1) Cast Al-mag Adjustable Picket Fitting Manufacturer and Product: Thompson Fabricating Co.; Part No. APF.
2) Cast Al-mag Adjustable Stair Fitting Manufacturer and Product: Thompson Fabricating Co.; Part No. ASF.
d. Furnish neoprene plug for each end of the picket.

11. Toeboards and Accessories:
a. Material: Molded or extruded 6063 or 6061 aluminum.
b. Manufacturers:
1) Thompson Fabricating Co.
2) Moultrie Manufacturing Co.; Part No. WIIKP20.

12. Castings for Handrails:
a. Cast Al-mag with sufficient strength to meet load and test requirements.
b. Anodizable grade finish with excellent resistance to corrosion when subject to exposure of sodium chloride solution intermittent spray and immersion.

E. Concrete Embedded Metal Anchorages: In accordance with Section 05500, Metal Fabrications and Castings.

F. Finishes:

1. Handrail Pipe and Post: In accordance with AA 45, designation AA-M32-C22-A41.
2. Cast Fittings and Toeboards: In accordance with AA 45, designation AA-M10-C22-A41.

2.03 GALVANIZED STEEL HANDRAILS

A. Pipe: Hot-dip galvanized carbon steel, ASTM A53/A53M, Type E or S, Grade B; or ASTM A501, 1-1/2-inch NPS with 1.900-inch outside diameter and a minimum 0.145-inch wall thickness for rails and a minimum of 0.200-inch wall thickness for posts.

B. Fittings:

1. Anchor Bolts and Fasteners: Stainless steel.
2. Handrail Post Bolted Baseplate Connector: Baseplate, carbon steel ASTM A36/A36M.
a. Insert: Minimum wall thickness of 0.200 inch or from solid rod in accordance with ASTM A36/A36M.

3. Handrail Wall Brackets: Malleable iron, round top, and galvanized.
   a. Manufacturers and Products:
      1) R & B Wagner; No. 1765.
      2) Julius Blum; No. 1382.
4. Handrail Gate: As specified for galvanized steel piping.
   a. Gate Hardware Manufacturers and Products: Type 304 stainless steel:
      1) Julius Blum & Co., Inc., Carlstadt, NJ; Connectorail System, No. 782/3 gate hinges with spring, and No. 784 gate latch and stop.
      2) Craneveyor Corp., South El Monte, CA; No. C4370b gate hinges with spring, No. C4369 gate latch, and No. C4368 gate stop.
5. Handrail Picket Panels and Clamps:
   a. Solid bar steel meeting minimum requirements specified for piping.
   b. Fasteners: Stainless steel.
6. Toeboards and Accessories:
   a. ASTM A36/A36M steel.
   b. Fasteners: Stainless steel.

C. Concrete Embedded Metal Anchorages: In accordance with Section 05500, Metal Fabrication and Castings.

D. Fasteners: Stainless steel.

2.04 ANCHOR BOLTS, FASTENERS, AND CONCRETE ANCHORS

A. Locknuts, Washers, and Screws:

1. Elastic Locknuts, Steel Flat Washers, RHMS Round Head Machine Screws: Type A 304 or Type A 316 stainless steel.
2. Flat Washers: Molded nylon.
3. Manufacturer: McMaster-Carr Supply Co., Los Angeles, CA.

B. Bolts and Nuts for Bolting Handrail to Metal Beams: ASTM A193/A193M and ASTM A194/A194M, Type A 316 stainless steel with minimum yield strength for bolts of 95,000 psi, unless otherwise shown.

C. Concrete Anchors:

1. Stainless steel Type 304 or Type 316.
2. Use ICC IBC approved service load allowable values for size, length, embedment, spacing, and edge distance to match required loads shown in calculations.

D. Epoxy Anchors: Heavy-duty 1/2-inch diameter, for exterior use only in accordance with Section 05500, Metal Fabrications and Castings, as an alternative to mechanical concrete anchors. Design and provide the number required. Do not use where fire or elevated temperatures above 110 degrees F exist.

## 2.05 FABRICATION OF ALUMINUM HANDRAILS

A. Shop Assembly:

1. Post Spacing: Maximum 6-foot horizontal spacing.
2. Railing Posts Bolted to Metal or Concrete:
   a. In lieu of field cutting, provide approved fitting with sufficient post overlap, containing provisions for vertical adjustment.
   b. Field fit-up is required.
3. Free of burrs, nicks, and sharp edges when fabrication is complete.
4. Welding is not permitted.

B. Shop/Factory Finishing:

1. Use same alloy for uniform appearance throughout fabrication for railings.
2. Handrail and Post Fittings: Match fittings with color of pipe in handrail.
3. Sand cast parts not permitted.

C. Tolerances:

1. Shop assemble rails, posts, and formed elbows with a close tolerance for tight fit.
2. Fit dowels tightly inside posts.

## 2.06 FABRICATION OF GALVANIZED STEEL HANDRAILS

A. Shop Assembly:

1. Alternate Post to Baseplate Connection:
   a. Field measure elevation of concrete at each post location and determine exact post length so baseplate is on concrete surface without shims or grout. Rails shall be in straight alignment when all rails to posts and posts to baseplates are welded.
   b. Grind welds prior to hot-dip galvanizing of railing sections.
2. Handrail Post Bolted to Metal or Concrete:
   a. Field fit-up is required.
   b. Field measure and weld post to baseplate as an alternative to field cutting.

3. Remove burrs from cut edges.
4. Form elbow bends and wall returns to uniform radius, free from buckles and twists, with finished surfaces smooth.
5. Cover exposed ends of steel pipe by welding 3/16-inch thick steel plate in place or use prefabricated fittings.
6. Welding:
   a. Thoroughly fuse without undercutting or overlap.
   b. Remove splatter, grind exposed welds to blend, and contour surfaces to match those adjacent.
7. Furnish explosion prevention holes at closed ends of pipes.
8. Form and assemble joints exposed to weather to prevent water and moisture from penetrating.

B. Shop/Factory Finishing: Hot-dip galvanize all components in accordance with ASTM A123/A123M after fabrication.

C. Tolerances:

1. Cut pipe square within 2 degrees and to lengths within 1/8 inch.
2. Welding: Miter and cope intersections of posts and rails within 2 degrees, fit to within 0.020 inch, and perform continuous welds around joints.
3. Repair of Defective Work: Remove stains and replace defective Work.

## PART 3 EXECUTION

### 3.01 GENERAL

A. Provide railing posts longer than needed and field cut to exact dimensions required in order to satisfy vertical variations on the actual structure. Install railing with a base that provides plus or minus 1/4-inch vertical adjustment inside the base fitting. If adjustment is required in the field and exceeds plus or minus 1/4-inch, reduce post length not to exceed beyond bottom of lowest set-screw or bolt in base fitting.

B. Field fabrication of aluminum railing systems not permitted.

C. Modification to structure not permitted where handrail is attached.

### 3.02 HANDRAIL INSTALLATION

A. Assembly and Installation: Perform in accordance with manufacturer's written recommendations for installation.

B. Protection from Entrapped Water:

1. Make provisions in exterior and interior installations subject to high humidity to drain water from railing system.
2. Posts mounted in concrete, bends and elbows occurring at low points, drill weep holes of 1/4-inch diameter at lowest possible elevations, one hole per post or rail. Drill hole in the plane of the rail.

C. Expansion Joints:

1. Maximum intervals of 54 feet on center and at structural joints.
2. Slip joint with internal sleeve extending 2 inches beyond each side of joint. Provide 1/2-inch slip joint gap to allow for expansion.
3. Fasten to one side using 3/8-inch diameter set-screw. Place set-screw at bottom of pipe.
4. Locate joints within 12 inches of posts. Locate expansion joints in rails that span expansion joints in structural walls and floors supporting the posts.

D. Setting Posts:

1. Surface Mounted:
   a. Bolt post baseplate connectors firmly in place.
   b. Shims, wedges, grout, and similar devices for handrail post alignment not permitted.

E. Posts and Rails:

1. Set posts plumb and aligned to within 1/8 inch in 12 feet.
2. Set rails horizontal or parallel to slope of steps to within 1/8 inch in 12 feet.
3. Install posts and rails in same plane. Remove projections or irregularities and provide a smooth surface for sliding hands continuously along top rail. Use offset rail for use on stairs and platforms if post is attached to web of stringers or structural platform supports.
4. Support 1-1/2-inch rails directly above stairway stringers with offset fittings.

F. Handrail Wall Brackets:

1. Support wall rails on brackets spaced maximum 6 feet on centers for steel and 5 feet for aluminum as measured on the horizontal projection.
2. Install wall anchor backplates on solid blocking in stud walls.

G. Toeboard:

1. Provide at all handrails except where 4-inch or higher concrete curbs are installed or at gates.
2. Accurately measure in field for correct length, after handrail post installation, cut and secure to posts.
3. Dimension between bottom of toeboard and walking surface not to exceed 1/4 inch.
4. Aluminum Toeboards: Provide expansion and contraction connections between each post.
5. Steel Toeboards: Between each post cut toeboard and provide slotted holes for expansion and contraction.

H. Railing Gate: Install in accordance with manufacturer's installation instructions.

3.03 FIELD FINISHING

A. Corrosion Protection: Prevent galvanic action and other forms of corrosion caused from direct contact with concrete and dissimilar metals by coating metal surfaces as specified in Section 09900, Painting and Protective Coatings.

1. Treatment of Field Welds for Galvanized Steel Railings: Touch up welds by application of two coats high-zinc dust content paint to dry film thickness of 2 mils.

3.04 TESTS AND INSPECTIONS

A. Perform Special Inspection for anchors where ICBO Reports require them for anchor strength value used.

B. Provide an independent test laboratory to perform Special Inspection. Special Inspectors shall be certified by ICC or ICBO to inspect anchor bolts and drilled-in anchors.

3.05 CLEANING

A. Wash railing system thoroughly using clean water and soap. Rinse with clean water.

B. Do not use acid solution, steel wool, or other harsh abrasive.

C. If stain remains after washing, restore in accordance with manufacturer's recommendations, or replace stained handrails.

**END OF SECTION**

# SECTION 05530
# METAL GRATING

## PART 1 GENERAL

### 1.01 REFERENCES

A. The following is a list of standards which may be referenced in this section:

1. American Association of State Highway and Transportation Officials (AASHTO): Standard Specifications for Highway Bridges, 14th Edition.
2. ASTM International (ASTM):
   a. A36, Standard Specification for Structural Steel.
   b. A123, Standard Specification for Zinc (Hot-Dip Galvanized) Coatings on Iron and Steel Products.
   c. A153, Standard Specification for Zinc Coating (Hot-Dip) on Iron and Steel Hardware.
   d. A167, Standard Specification for Stainless and Heat-Resisting Chromium-Nickel Steel Plate, Sheet, and Strip.
   e. A193, Standard Specification for Alloy-Steel and Stainless Steel Bolting Materials for High-Temperature Service.
   f. A194, Standard Specification for Carbon and Alloy Steel Nuts for Bolts for High-Pressure and High-Temperature Service.
   g. A307, Standard Specification for Carbon Steel Bolts and Studs, 60,000 psi Tensile Strength.
   h. A525, Standard Specification for General Requirements for Steel Sheet, Zinc-Coated (Galvanized) by the Hot-Dip Process.
   i. A569/A569M, Standard Specification for Steel, Carbon (0.15 Maximum Percent), Hot-Rolled Sheet and Strip Commercial Quality.
   j. B221, Standard Specification for Aluminum and Aluminum-Alloy Extruded Bars, Rods, Wire, Shapes, and Tubes.
   k. F844, Standard Specification for Washers, Steel, Plain (Flat), Unhardened for General Use.
3. National Association of Architectural Metal Manufacturers (NAAMM):
   a. ANSI MBG 531, Metal Bar Grating Manual.
   b. ANSI MBG 532, Heavy-Duty Metal Bar Grating Manual.

1.02 SUBMITTALS

A. Action Submittals:

1. Shop Drawings:
   a. Grating: Show dimensions, weight, and size, and location of connections to adjacent grating, supports, and other Work.
   b. Grating Anchorage: Show structural calculations and details of anchorage to supports to prevent displacement from traffic impact.
   c. Grating Supports: Show dimensions, weight, size, location, and anchorage to supporting structure.
   d. Catalog information and catalog cuts.
   e. Manufacturer's specifications, to include coatings.
2. Samples: Two Samples of swaged aluminum grating approximately 4 by 8 inches, showing at least four crossbars each and four bearing bars each. One Sample will be retained at the Site to be used as a basis for acceptance or rejection of swaged grating installed.

B. Informational Submittals:

1. Special handling and storage requirements.
2. Installation instructions.
3. Factory test reports.
4. Manufacturer's Certification of Compliance for specified products.
5. Written Test Report that swaged crossbars, if used on grating, meet the requirements of the specified test and additional requirements of these Specifications.

1.03 PREPARATION FOR SHIPMENT

A. Insofar as is practical, factory assemble items provided.

B. Package and clearly tag parts and assemblies that are of necessity shipped unassembled and protect the materials from damage, and facilitate identification and final assembly in the field.

**PART 2 PRODUCTS**

2.01 FOOT TRAFFIC GRATING

A. Design:

1. Uniform Service Load: 200 psf minimum, unless otherwise shown.
2. Maximum Deflection: 1/4 inch, unless otherwise shown.
3. Space bearing bars at 1-3/16 inch center-to-center.

4. Banding: 3/16 inch minimum.

B. Material:

1. Aluminum Bar Type Grating:
   a. Press-locked rectangular design, as manufactured by IKG/Borden, Clark, NJ; IKG/Borden Type B or Type F.
   b. Swage locked aluminum grating, rectangular bar type, as manufactured by:
      1) IKG/Borden, Clark, NJ; IKG/Borden Type BS or Type FS.
      2) Seidelhuber Metal Products Inc., San Carlos CA; Type A-2.
      3) Ohio Gratings, Inc., Canton, OH; Aluminum Flush Top, Type 19SGF2.
      4) Klemp Corp., Chicago, IL; Type KRP.
   c. Swage locked aluminum I-bar grating, as manufactured by:
      1) IKG/Borden, Clark, NJ; Type IF.
      2) Seidelhuber Metal Products, Inc., San Carlos, CA; Type 19SI2.
      3) Ohio Gratings, Inc., Canton, OH; Type 19 SGI 2.
      4) Klemp Corp., Chicago, IL; Type KIP.
2. Galvanized Steel Bar Type Grating: Press-locked, deep rectangular crossbar design, as manufactured by IKG/Borden, Clark, NJ; Type B or Type F.
3. Stair Treads:
   a. Material and Type: Same as grating material and grating type as furnished for connecting walkway or work surface.
   b. Nosings: Integral ribbing and serrated edge on one long axis of tread or nonslip, abrasive on each tread along one long edge.
   c. Carrier Plate or Angle: Furnish at each end for connection to stair stringers.
   d. Manufacturers: Same as for grating.

## 2.02 LIGHT VEHICULAR TRAFFIC GRATING

A. Design:

1. Maximum Load: 2,000 pounds per wheel, minimum wheel base and axle width of 4 feet 0 inch.
2. Space main bars at 1-3/16 inch center-to-center.
3. Banding: 1/4 inch.

B. Material:

1. Aluminum Bar Type Grating: Press-locked deep rectangular crossbar design as manufactured by IKG/Borden, Clark, NJ, IKG/Borden; Type B or Type F.
2. Galvanized Steel Bar Type Grating: After Fabrication: ASTM A123, zinc coating.
   a. Manufacturer and Product: IKG/Borden, Clark, NJ; IKG/Borden heavy-weld Type HWF or Type HWB or press-locked, rectangular crossbar, Type FJ or BJ.

2.03 HEAVY VEHICULAR TRAFFIC GRATING

A. Design:

1. Loading: AASHTO HS 20-44.
2. Banding: 1/4 inch.

B. Material:

1. Galvanized Steel Bar Type:
   a. Heavy-duty, main bars spaced at 1-7/8 inch maximum center-to-center.
   b. After Fabrication: ASTM A123, zinc coating.
   c. Manufacturer and Product: IKG/Borden, Clark, NJ; KG/Borden heavy-weld Type HWF or HWB or press-locked, rectangular crossbar, Type BJ or FJ.

2.04 ACCESSORIES

A. Anchor Bolts and Nuts:

1. Carbon Steel: ASTM A307 or A36.
2. Stainless Steel: ASTM A193 and ASTM A194, Type 316.
3. Galvanized Steel Bolts and Nuts: ASTM A153, zinc coating for ASTM A307 or A36.

B. Flat Washers (Unhardened): ASTM F844; use ASTM A153 for zinc coating.

C. Removable Fastener Clips and Bolts:

1. Removable from above grating walkway surface.
2. Hat Bracket: Type 304 stainless steel.
3. Bolt: Type 316 stainless steel.
4. Cast iron, galvanized body.

5. Manufacturer and Product: Struct-Fast, Wellesley Hills, MA; Gratefast.

D. Partially Removable Anchor:

1. Bolt: Threaded stud, Type 316 stainless steel.
   a. Manufacturer: Nelson Stud Welding Co., Lorain, OH.
2. Hat Bracket: Type 304 stainless steel.
   a. Manufacturer: STRUCT-FAST, Wellesley Hills, MA.

2.05 FABRICATION

A. General:

1. Exposed Surfaces: Smooth finish and sharp, well-defined lines.
2. Furnish necessary rabbets, lugs, and brackets so work can be assembled in a neat, substantial manner.
3. Conceal fastenings where practical.
4. Drill metalwork and countersink holes as required for attaching hardware or other materials.
5. Weld Connections: Not permitted on grating except at banding bars.

B. Design:

1. Field measure areas to receive grating, verify dimensions of new fabricated supports, and fabricate to dimension required for specified clearances.
2. Section Length: Sufficient to prevent its falling down through clear opening when oriented in the span direction when one end is touching either the concrete or the vertical leg of grating support.
3. Minimum Bearing: ANSI/NAAMM MBG 531.
4. Metal Crossbar Spacing: 2 inches maximum, unless otherwise shown or specified.
5. Crossbars: Flush with top of main bar and extend downward a minimum of 50 percent of the main bar depth.
   a. Swaged Crossbars:
      1) Within 1/4 inch of top of grating with 1/2 inch minimum vertical dimension after swaging, and minimum before swaging dimension of 5/16 inch square.
      2) Crossbar Dimension After Swaging: Minimum 1/8 inch wider than the opening at minimum of two corners at each side of each square opening in main bar.
      3) Crossbars may be a special extruded shape so that after swaging the top will be flat, 3/16 inch wide and will be flush

with the top surface of the bearing bars for a minimum of 5/8 inch at center between bearing bars.

4) Flush crossbar meeting all of the above except that after swaging shall overlap one corner by a minimum of 1/8 inch. A Sample of one bearing bar and one crossbar shall be tested by holding the bearing bar and pulling on the crossbar. The crossbar to bearing bar shall sustain a minimum of 300 pounds without pullout of the bearing bar.

5) Tightly fit main bars and crossbars allowing no differential movement.

6. Do not use weld type crossbars.
7. Banding: Same material as grating; ANSI/NAAMM MBG 531 and ANSI/NAAMM MBG 532.
8. Furnish stainless steel Type 316 threaded anchor studs, as fasteners for grating attachment to metal supports either not embedded or partially embedded in concrete, as manufactured by Nelson Studs Welding Co., Lorain, OH.

C. Supports:

1. Seat angles and beams where shown:
   a. Same material as rectangular bar grating.
   b. Extruded aluminum frame with slot for recessed grating clips, as manufactured by Thompson Fabricating Co., for aluminum I-Bar type grating.
2. Coordinate dimensions and fabrication with grating to be supported.
3. Coordinate dimensions with increased depth due to serrations.
4. Welded Frames With Anchors: Continuously welded.

D. Slip-Resistant Surface:

1. Rectangular Steel and/or Aluminum Bar Grating: As manufactured by:
   a. IKG/Borden, Clark, NJ; EZ Weldslip-Resistant Coating.
   b. Seidelhuber Metal Products, Inc., Hayward, CA; Safety Grit Non-Slip System.
   c. Ohio Gratings, Inc., Canton, OH with "Slip-Not" Safety Surface manufactured by W.S. Molnar Co., Detroit, MI.
2. I-Bar grating aluminum shall incorporate a striated antiskid walking surface produced during the extrusion process, as manufactured by:
   a. IKG/Borden, Clark, NJ.
   b. Seidelhuber Metal Products, Inc., Hayward, CA.
   c. Klemp Corp., Chicago, IL.

3. Extruded Plank Grating incorporating a rib pattern as part of the extrusion process and a crosswise serration to provide uni-directional slip resistance. Reference Federal Specification RGC-1602.
   a. Cressona Aluminum, Cressona, PA; Diamondback.

E. Aluminum:

1. ASTM B221 extruded shapes.
2. Fabricate as shown and in accordance with manufacturer's recommendations.
3. Grind smooth sheared edges exposed in the finished work.
4. Swage crossbars, if used, with equipment strong enough to deform crossbars.
5. Eliminate any loose crossbar intersections on swaged grating.

F. Foot Traffic Grating: Any single grating section, individual plank, or plank assembly shall be not less than 1 foot 6 inches or greater than 3 feet 0 inch in width or weigh more than 150 pounds.

G. Light Vehicular Traffic Grating: Any single grating section, individual plank, or plank assembly shall not be less than 1 foot 6 inches or greater than 3 feet 0 inch in width (except 3/8-inch thick bearing bar grating), or weigh more than 150 pounds.

H. Heavy Vehicular Traffic Grating: Minimum width of grating sections shall be 2 feet 0 inch regardless of length and weight.

## PART 3 EXECUTION

### 3.01 PREPARATION

A. Electrolytic Protection:

1. Aluminum in contact with dissimilar metals, other than stainless steel, and embedded or in contact with masonry, grout, and concrete, protect surfaces as specified in Section 09900, Painting and Protective Coatings.
2. Allow paint to dry before installation of the material.

### 3.02 INSTALLATION

A. Install supports such that grating sections have a solid bearing on both ends, and that rock and wobble grating movement does not occur under designed traffic loading.

B. Install plumb or level as applicable.

C. Install welded frames with anchors to straight plane without offsets.

D. Anchor grating securely to supports using minimum of four fastener clips and bolts per grating section.

E. Use stainless steel anchors and accessories with aluminum gratings.

F. Completed installation shall be rigid and neat in appearance.

G. Commercially Manufactured Products:

1. Install in accordance with manufacturer's recommendations.
2. Secure grating to support members with fasteners.
3. Welding is not permitted.
4. Fasteners: Field locate and install.
5. Permit each grating section or plank style grating assembly to be easily removed and replaced.

H. Protect painted surfaces during installation.

I. Should coating become marred, prepare and touch up surface in accordance with paint manufacturer's instructions.

**END OF SECTION**

# SECTION 06000
# CARPENTRY

## PART 1 GENERAL

### 1.01 REFERENCES

A. The following is a list of standards which may be referenced in this section:

1. American Institute of Timber Construction (AITC):
   a. 117, Structural Glued Laminated Timber of Softwood Species, Design Requirements.
   b. ANSI/AITC A190.1, Structural Glued Laminated Timber.
2. American Wood Preservers' Association (AWPA):
   a. C2, Lumber, Timbers, Bridge Ties and Mine Ties-Preservative Treatment by Pressure Processes.
   b. C9, Plywood—Preservative Treatment by Pressure Process.
   c. C20, Structural Lumber—Fire-Retardant Treatment by Pressure Processes.
   d. C27, Plywood—Fire-Retardant Treatment by Pressure Processes.
3. APA-The Engineered Wood Association (APA): Grades and Specifications.
4. Architectural Woodwork Institute (AWI): Quality Standards, Guide Specifications and Quality Certification Program.
5. ASTM International (ASTM):
   a. A307, Specification for Carbon Steel Bolts and Studs, 60,000 PSI Tensile Strength.
   b. E84, Standard Test Method for Surface Burning Characteristics of Building Materials.
6. Federal Specifications (FS): MMM-A-130B, Adhesive, Contact.
7. National Electrical Manufacturer's Association (NEMA): LD 3, High-Pressure Decorative Laminates.
8. National Evaluation Service, Inc. (NER): 272, Power-Driven Staples and Nails for Use in All Types of Building Construction.
9. National Fire Protection Association (NFPA): 255, Standard Method of Test of Surface Burning Characteristics of Building Materials.
10. Product Standards (PS)-U.S. Department of Commerce National Bureau of Standards:
    a. 1, For Construction and Industrial Plywood.
    b. 20, American Softwood Lumber Standard.
11. Underwriters' Laboratories, Inc. (UL): 723 Test for Surface Burning Characteristics of Building Materials.

12. Western Wood Products Association (WWPA): Standard Grading Rules for Western Lumber.

1.02 SUBMITTALS

A. Action Submittals:

1. Shop Drawings for Locker Benches and Trim:
   a. Show field measurements, construction details, dimensions, materials, and finish.
   b. Use full-size or 1/4-scale drawings.
   c. Key Shop Drawings to Contract Document Drawings.

1.03 QUALITY ASSURANCE

A. Lumber Grades and Wood Species: U.S. Product Standard PS 20 and the National Forest Products Association.

1. Wood Members: Requirements above and in "Design Values for Wood Construction", supplement to the National Design Specification for Wood Construction, published by National Forests Products Association.
2. Identify each piece or bundle of lumber or other product with a recognized mark of the authority grading the product.

B. Plywood Grades: U.S. Product Standard PS 1. Identify each plywood panel with appropriate grade trademark of APA-The Engineered Wood Association.

C. Finish Carpentry: Quality Standards of Architectural Woodwork Institute (AWI) unless detailed otherwise.

D. Preservative and Pressure Treated Material: American Wood Preservers Association Standards (AWPA).

1.04 DELIVERY, STORAGE, AND HANDLING

A. Place materials in dry storage areas immediately upon delivery and maintain relative humidity at 60 percent or less.

B. Store materials 6 inches minimum aboveground on framework or blocking; cover with protective waterproof covering and provide adequate air circulation or ventilation.

C. Do not store seasoned materials in wet or damp portions of building.

D. Do not subject to extreme changes of temperature or humidity.

E. Protect fire-retardant materials against high humidity and moisture during storage and erection.

F. Protect sheet materials from corner breaks and surface damage while unloading.

## PART 2 PRODUCTS

### 2.01 LUMBER

A. Framing Lumber: Dimensions given are nominal; surface four sides (S4S); moisture content not over 19 percent, unless specified otherwise; provide as follows:

| Usage | Minimum Grade |
|---|---|
| General blocking, furring, braces, & nailers | Standard & Better or Stud Grade |

B. Finish Lumber: Kiln-dried; average moisture content range as follows:

1. Interior Work: 6 to 11 percent.

C. Interior Trim: Douglas fir, C Select Grade, or AWI Custom Grade.

D. Hardwood: Plain sawn natural red birch, AWI Custom Grade.

### 2.02 CONSTRUCTION PANELS

A. Plywood

1. General:
   a. Where construction panels are shown on Drawings for the following concealed types of applications, provide APA Performance-Rated Panels complying with requirements designated under each application for grade designation, span rating, exposure durability classification, edge detail, and thickness.
   b. Construction Panel Standards: Comply with DOC PS 1 for plywood construction panels and for products not manufactured under DOC PS 1 provisions, in accordance with APA PRP-108.
   c. Trademark: Each construction panel factory-marked with APA trademark evidencing compliance with grade requirements.

B. Plywood Backing Panels: Mounting electrical, telephone and like equipment, provide fire-retardant treated plywood panels with grade designation, APA C-D Plugged Exposure 1, in thickness shown on Drawings, or, if not shown on Drawings, not less than 15/32 inch.

2.03 PRESERVATIVE WOOD TREATMENT BY PRESSURE PROCESS

A. General: Where lumber or plywood is indicated as preservative treated wood, in accordance with AWPA C2 (Lumber) and AWPA C9 (Plywood). Mark and grade each treated item in accordance with SPIB 1003 or WWPA G5.

1. Kiln-dry after treatment to maximum moisture content of 19 percent.
2. Treat wood in contact with roofing or flashing.
3. Treat wood in contact with masonry or concrete.
4. Treat wood less than 18 inches above grade.

B. Aboveground Materials: Pressure treat items with waterborne preservatives to a minimum retention of 0.25 pcf. For interior uses, after treatment, kiln-dry lumber and plywood to maximum moisture content, respectively, of 19 percent and 15 percent. Treat the following items:

1. Wood nailers, curbs, equipment support bases, blocking, stripping, and similar members in connection with flashing, vapor barriers, and waterproofing.
2. Wood blocking, furring, stripping, and similar concealed members in contact with concrete.

C. Complete fabrication of treated items prior to treatment, where possible. If cut after treatment, coat cut surfaces to comply with AWPA M4. Inspect each piece of lumber or plywood after drying and discard damaged or defective pieces.

2.04 FIRE-RETARDANT TREATED WOOD

A. Pressure treat lumber and plywood with fire-retardant chemicals in accordance with AWPA C20 and AWPA C27, respectively, so that it has flame spread rating not higher than 25 with no evidence of significant progressive combustion when tested for 30 minutes duration under UL 723, NFPA 255, and ASTM E84. Treated lumber and plywood labeled and tested by Underwriters' Laboratories, Inc. shall show performance rating.

2.05 LOCKER BENCHES

A. Glulam Timber: Architectural Grade, complying with AITC 117 and ANSI/AITC A190.1.

2.06 PLYWOOD SILLS WITH PLASTIC LAMINATE FINISH

A. Plywood: APA B-B exterior.

B. Plastic Laminate: Furnish at exposed surfaces, including edges, of sills as shown on Drawings.

1. Material: 1/16-inch thick, conforming to NEMA LD 3, Grade GP-50; in color as shown in Section 09000, Finish Schedules.

C. Adhesives for Plastic Laminate: Contact cement, FS MMM-A-130B.

2.07 ANCILLARY MATERIALS

A. Fasteners:

1. Nails: Steel common nails for framing, sizes as shown; hot-dipped zinc-coated nails where exposed; deformed shank nails for fastening underlayment.
2. Bolts and Screws: ASTM A307, galvanized where exposed.
3. Framing Anchors: Simpson, Teco, or Bowman galvanized 18 gauge steel, complete with nails recommended by manufacturer.
4. Provide fasteners and miscellaneous hardware required for assembling and anchoring finish woodwork.
5. Power-Driven Fasteners: Conforming to NER 272.

**PART 3 EXECUTION**

3.01 EXAMINATION

A. Verify that surfaces to receive carpentry items are prepared.

B. Broom clean spaces before beginning installation.

3.02 ROUGH CARPENTRY ERECTION

A. Preservative Treated Wood:

1. Use for blocking and furring and wood in contact with concrete.
2. Apply two brush coats of same preservative used in original treatment to all sawed or cut surfaces of treated lumber.

B. Fire-Retardant Treated Wood: Provide fire-retardant treated lumber and plywood for backing panels at electrical, telephones, and like equipment. Use FR-S rated wood on interior only. Use exterior rated wood outside and where relative humidity is above 80 percent.

## 3.03 FINISH CARPENTRY INSTALLATION

A. General:

1. Lay out, cut, fit, and install finish carpentry items.
2. Anchor to ensure rigidity, tight fit, and permanence, and as shown.
3. Install items accurate to dimension, true to line, level, and square unless otherwise shown.
4. Install running trim in as long a length as practical.
   a. Miter corners of casings and moldings.
   b. Anchor securely using finishing nails.
   c. Counter set nails 1/16 inch maximum for filling.
5. Follow manufacturer's instructions for installation of hardware, framing anchors, and other items.
   a. Make Work neat and secure, developing full strength of components and providing intended function.

## 3.04 SILL INSTALLATION

A. Install sills where shown on Drawings.

B. Plastic Laminate:

1. Apply as recommended by the laminate manufacturer.
2. Use minimal amount of cross joints with no longitudinal joints.

**END OF SECTION**

# SECTION 06500
# FIBERGLASS REINFORCED PLASTIC PRODUCTS AND FABRICATIONS

## PART 1 GENERAL

### 1.01 REFERENCES

A. The following is a list of standards which may be referenced in this section:

1. ASTM International (ASTM):
   a. C177, Standard Test Method for Steady-State Heat Flux Measurements and Thermal Transmission Properties by Means of the Guarded Hot-Plate Apparatus.
   b. D570, Standard Test Method for Water Absorption of Plastics.
   c. D635, Standard Test Method for Rate of Burning and/or Extent and Time of Burning Plastics in a Horizontal Position.
   d. D638, Standard Test Method for Tensile Properties of Plastics.
   e. D695, Standard Test Method for Compressive Properties of Rigid Plastics.
   f. D696, Standard Test Method for Coefficient of Linear Thermal Expansion of Plastics Between -30 Degrees C and 30 Degrees C.
   g. D790, Standard Test Methods for Flexural Properties of Unreinforced and Reinforced Plastics and Electrical Insulating Materials.
   h. D792, Standard Test Methods for Density and Specific Gravity (Relative Density) by Plastics Displacement.
   i. D2344, Standard Test Method for Apparent Interlaminar Shear Strength of Parallel Fiber Composites by Short-Beam Method.
   j. D2583, Standard Test Method for Indentation Hardness of Rigid Plastics by Means of a Barcol Impressor.
   k. E84, Standard Test Method for Surface Burning Characteristics of Building Materials.
2. International Code Council (ICC): International Building Code (IBC).
3. Occupational Safety and Health Act (OSHA): 29 CFR 19.10, Code of Federal Regulations.
4. Underwriters' Laboratories, Inc. (UL): 94, UL Standard for Safety Test for Flammability of Plastic Materials for Parts in Devices and Appliances.

1.02 DESIGN REQUIREMENTS

A. This section contains components and connectors that require Contractor design.

1.03 SUBMITTALS

A. Action Submittals:

1. Shop Drawings:
   a. Product Data: Catalog information and catalog cuts showing materials, design tasks, and showing load, span, and deflection; include manufacturer's specifications.
   b. Grating: Show dimensions, weight, size, and location of connections to adjacent grating, supports, and other Work.
   c. Grating Supports: Show dimensions, weight, size, location, and anchorage to supporting structure.
   d. Stairs, Platforms, Stringers, Handrails, Ladders, and Support Structures:
      1) Show dimensions, weight, size, and location of connections to adjacent supports and other Work.
      2) Structural calculations for platforms, ladders and cages, handrails, and other fabrications shown.
2. Samples: Each type of grating, handrail, and handrail connection.

B. Informational Submittals:

1. Handling and storage requirements.
2. Manufacturer's installation instructions.
3. Factory test reports for physical properties of product.
   a. Test data for handrails and supports may supplement load calculations providing data covers the complete system, including anchorage.
   b. Test data for all components showing load and deflection due to load, in enough detail to prove handrail is strong enough and satisfies national, state, local standards, regulations, code requirements, and OSHA 29 CFR 19.10, using design loads specified.
   c. Include test data for the following:
      1) Railing and post connections.
      2) Railing wall connections.
      3) Post and base connections.
      4) Railing expansion joint connections.

4. Manufacturer's Certification of Compliance for specified products.
5. Fabricator's qualification experience.
6. Manufacturer's qualification experience.
7. Independent laboratory test report, dated within 2 years of submittal date, of fire retardant testing conducted on exact type of grating proposed (not a resin test report).

1.04 QUALIFICATIONS

A. Designer: Calculations required for Contractor design shall be stamped by a registered engineer, licensed in state where Project will be constructed.

B. Fabricator: Minimum of 5 years' experience.

C. Manufacturer: Minimum of 5 years' experience in manufacturing of products meeting these specifications.

1.05 DELIVERY, STORAGE, AND HANDLING

A. Preparation for Shipment:

1. Insofar as is practical, factory assemble items provided hereunder.
2. Ladders shall be shipped fully shop-fabricated and assembled.
3. Package and clearly tag parts and assemblies that are of necessity shipped unassembled in a manner that will protect materials from damage, and facilitate identification and final assembly in field.

B. Storage and Handling: In accordance with manufacturer's recommendations and in such a manner as to prevent damage of any kind, including overexposure to sunlight.

**PART 2 PRODUCTS**

2.01 GENERAL

A. Like Items of Materials: Where possible, provide end products of one manufacturer in order to achieve standardization for appearance, maintenance, and replacement.

B. Unless otherwise specified, all products shall be manufactured by a pultruded process using vinyl ester resin.

C. Products shall be manufactured with ultra-violet (UV) inhibitor additives.

D. Exterior surfaces shall have a synthetic surface veil covering.

E. Furnish molded products as an option where permitted by specifications.

F. Fire Retardance:

1. Flame spread shall be less than 25 as measured by ASTM E84.
2. Include combinations of aluminum trihydrate, halogen, and antimony trioxide, where required to meet fire retardance, in the resin system.
3. Meet self-extinguishing requirements of ASTM D635.

G. Color pigment shall be dispersed in resin system.

H. Fabricate FRP products exposed to outdoor conditions with an additional 1-mil thick UV coating to shield product from UV light.

I. All cut ends, holes, and abrasions of FRP shapes shall be sealed with resin to prevent intrusion of moisture.

## 2.02 GRATING AND STAIR TREADS

A. General:

1. 100 psf minimum, unless otherwise shown.
2. Maximum Deflection: 1/4 inch, unless otherwise shown.
3. Stair Tread: 100 psf uniform load or concentrated load of 300 pounds on area of 4 square inches located in center of tread, whichever produces greater stress.

B. Molded Type:

1. Nonskid grit affixed to top of bar surface or a concave, meniscus top to all bars, providing skid resistance.
2. Load bars in both directions with equal stiffness.
3. Square mesh, 1-1/2 inch maximum spacing.

C. Pultruded Type:

1. Main bars joined by cross bars secured in holes drilled in main bars.
2. Cross bars, with 6-inch maximum spacing, shall mechanically lock main bars in position such that they prevent movement.
3. Intersections: Bond using adhesive as corrosive-resistant as pultrusion resin.

4. Main Bar Ends: Minimum bearing support width of 1-1/2 inches.
5. Skid-Resistant Surface: Grit adhesively bonded, manufacturer's standard.
6. Provide extra stiffness around openings.

D. Hold-Down Clamps: Same material as grating or Type 316 stainless steel.

E. Bolts and Connectors:

1. Corrosion-resistant FRP or Type 316 stainless steel.
2. Size and strength to meet UBC requirements.

F. Fabrications:

1. Field measure areas to receive grating. Verify dimensions of new fabricated supports, and fabricate to dimension required for specified clearances.
2. Section Length: Sufficient to prevent its falling through clear opening when oriented in span direction when one end is touching either concrete or vertical leg of grating support.

G. Manufacturers:

1. Fibergrate Composite Structures, Inc., Addison, TX.
2. IKG/Borden, Clark, NJ.
3. Strongwell Corp., Bristol Division, Bristol, VA or Chatfield Division, Chatfield, MN.
4. International Grating, Inc., Houston, TX.

## 2.03 STRUCTURAL PLATFORMS

A. Deflection and Safety Factors:

1. Deflection Criteria: Not to exceed L/360.
2. Safety Factors: Minimum ratios of ultimate stress to allowable static service stress:
   a. Flexural Members: 2.5.
   b. Compression Members: 3.0.
   c. Shear: 3.0.
   d. Connections: 4.0.
3. Minimum design safety factors for dynamic or impact loads shall be twice the values for static service loads.

B. Loads:

1. 100 psf uniform live load over platform.
2. Static and dynamic loads for equipment shown.

C. Glass fiber reinforced polyester or vinyl ester resin matrix, approximately 50 percent resin-to-glass ratio.

D. Continuous glass strand rovings shall be used internally for longitudinal strength.

E. Continuous strand glass mats shall be used internally for transverse strength.

F. Material Properties:

| **Minimum Ultimate Coupon Properties (UN)** | | |
|---|---|---|
| **Material Properties** | **Test Method** | **Units** |
| **Pultruded Fiberglass Structural Shapes** | | |
| Ultimate tensile stress in longitudinal direction, psi (MPa) | ASTM D638 | 30,000 (207) |
| Ultimate compressive stress in longitudinal direction, psi (MPa) | ASTM D695 | 30,000 (207) |
| Ultimate flexural stress in longitudinal direction, psi (MPa) | ASTM D790 | 30,000 (207) |
| Ultimate short beam shear in longitudinal direction, psi (MPa) | ASTM D2344 | 4,500 (31) |
| Ultimate tensile stress in transverse direction, psi (MPa) | ASTM D638 | 7,000 (48) |
| Ultimate compressive stress in transverse direction, psi (MPa) | ASTM D695 | 15,000 (103) |
| Ultimate flexural stress in transverse direction, psi (MPa) | ASTM D790 | 10,000 (69) |

| Minimum Ultimate Coupon Properties (UN) | | |
|---|---|---|
| **Material Properties** | **Test Method** | **Units** |
| Density (lb/in.$^3$) (kg/mm$^3$) | ASTM D792 | 0.060-0.070 (0.00166-00194) |
| Water absorption (25-hr immersion) | ASTM D570 | 0.60 max, % by weight |
| Barcol hardness | ASTM D2583 | 45 |
| Coefficient of thermal expansion $10^{-6}$ in./in./° C | ASTM D696 | |
| Expansion, LW$10^{-6}$ in./in./° F | | 4.4 |
| Thermal conductivity, Btu-in./ft$^2$/hr/° F | ASTM C177 | |
| **Flame-Retardant Properties** | | |
| Flammability test | ASTM D635 | Self-extinguishing |
| Surface burning characteristics | ASTM E84 | 25 maximum |
| Flammability class | UL 94 | VO |
| Temperature index | UL 94 | 130 C |

G. Manufacturers and Designers:

1. Strongwell Corp., Bristol, VA.
2. Fibergrate Composite Structures, Inc., Addison, TX.

2.04 HANDRAIL

A. Structural Criteria:

1. Deflection: No permanent set in any member or connection when tested to design load.
2. Apply load to produce maximum stress and deflection in each of the respective components.
3. Top Rail and Posts of Handrails: Capable of withstanding the following load cases applied with a safety factor of 1.33:
   a. Concentrated load of 200 pounds applied at any point and in any direction in accordance with OSHA and ICC IBC.

b. Uniform load on the top rail of 50 pounds per linear foot applied horizontally in accordance with ICC IBC.
c. Concentrated load need not be assumed to act concurrently with uniform loads in accordance with ICC IBC.

4. In-Fill Area of Railing Systems:
   a. Capable of withstanding horizontal concentrated load of 200 pounds applied to 1 square foot at any point in the system including panels, intermediate rails, balusters, or other elements composing in-fill area.
   b. Horizontal concentrated load need not be assumed to act concurrently with loads on top rails of handrails.
5. Mid-Rails With Corner Returns: Withstand 300-pound concentrated vertical load applied at any point or direction without damage and loosening of fittings or attachment hardware.
6. Concrete Anchors for Handrail Wall Brackets: Not to exceed ICC IBC allowable loads for actual spacing, edge distance, and embedment, with assumed concrete strength of 4,000 psi.
7. Concrete Anchors: In accordance with ICC IBC allowable load values for size, length, embedment, spacing, and edge distance to match required loads shown in calculations.
8. Connections, Mounts, Bases: Withstand all handrail loads without permanent set and with a safety factor of at least 1.65 against failure.

B. Thermal Movement:

1. Allow for maximum range of ambient temperature change (difference between high or low and installation temperature).
2. Base design on actual surface temperatures of materials due to both solar heat gain and night time sky heat loss.
3. Temperature Change Range: 70 degrees F, ambient; 100 degrees F, material surfaces.

C. Rails and Posts:

1. 2-inch nominal square or round tubing posts.
2. 1-3/4- or 2-inch nominal round or square rails.
3. Maximum Post Spacing: 5 feet.
4. Clearance Between Rails: 11-1/2 inches.

D. Kickplates: Corrugated, 4 inches by 1/2 inch by 0.125 inch thick or 4 inches by 9/16 inch thick at all handrail locations.

E. Kickplate Connectors and Splices: Continuous with provision for expansion and contraction without distortion or buckling.

F. Connections, Mounts, Bases: Fiberglass or Type 316 stainless steel.

G. Pultruded Parts:

| Minimum Mechanical Properties | Test Method | Values |
|---|---|---|
| Tensile Stress | ASTM D638 | 30,000 psi |
| Tensile Modulus | ASTM D638 | $2.5 \times 10^6$ psi |
| Compressive Stress | ASTM D695 | 30,000 psi |
| Compressive Modulus | ASTM D695 | $2.5 \times 10^6$ psi |
| Flexural Stress | ASTM D790 | 30,000 psi |
| Flexural Modulus | ASTM D790 | $1.6 \times 10^6$ psi |
| Shear Stress | ASTM D2344 | 4,500 psi |
| Density | ASTM D792 | 0.060-0.070 lbs/in.$^3$ |
| 24-Hour Water Absorption | ASTM D570 | 0.6% max. |
| Coefficient of Thermal Expansion | ASTM D696 | $4.4 \times 10^{-6}$ in./in./degree F |
| Flexural Stress | Full Section | 36,000 psi |
| Flexural Modulus | Full Section | $3.7 \times 10^6$ psi |

H. Manufacturers:

1. Strongwell Corp., Bristol, VA.
2. Fibergrate Composite Structures, Inc., Addison, TX.

2.05 LADDERS AND CAGES

A. Ladder Criteria:

1. Capable of supporting a 250-pound concentrated load plus 30 percent impact at midspan of rung.

2. Side Rails: 1-3/4-inch square tubes, 0.25 inch thick.
3. Rungs: Minimum 1-inch-diameter thermal cure rod with pigmented epoxy, nonskid grit surface, or 1-1/4-inch minimum diameter pultruded, fluted, nonslip surface of vinyl ester resin.

B. Cage Criteria:

1. Capable of withstanding a 200-pound load in any direction at any location without permanent distortion.
2. Top and Bottom Hoops: 3-inch minimum width by 1/4-inch minimum thickness.
3. Intermediate Hoops: 2-inch minimum width by 1/4-inch minimum thickness.
4. Hoops manufactured by open-mold hand layup process.
5. Vertical Connecting Straps to Hoops:
   a. 2 inches wide by 3/16 inches thick or 2 inches wide by 9/16 inch pultruded channels.
   b. Maximum Spacing: 9 inches.
6. Maximum Vertical Distance Between Hoops: 3 feet, 6 inches.

C. Manufacturers:

1. Strongwell Corp., Bristol, VA.
2. Fibergrate Composite Structures, Inc., Addison, TX.

## PART 3 EXECUTION

### 3.01 GENERAL

A. Install in accordance with manufacturer's written instructions.

B. Install plumb or level, rigid and neat, as applicable.

C. Furnish fasteners and anchorages for complete installation.

D. Seal field cut holes, edges, and abrasions with catalyzed resin compatible with original resin.

### 3.02 GRATING

A. Anchor grating securely to supports to prevent displacement.

B. Install each grating section such that it is easily removable.

C. Clearance (Grating to Vertical Surfaces): 1/4 inch (plus or minus 1/8-inch tolerance).

3.03 HANDRAIL

A. Provide and install expansion and contraction connections as shown on approved Shop Drawings.

3.04 STRUCTURAL SHAPES

A. Connect parts with approved connectors meeting manufacturer's design requirements and with corrosion resistance equal to structural shapes.

B. Provide supports and bracings required to comply with applicable codes and design requirements.

3.05 LADDERS AND CAGES

A. Epoxy and rivet joints and rungs.

B. Attach hoops to maintain full width clearance between rails, full height of ladder.

**END OF SECTION**

# SECTION 07210
# BUILDING INSULATION

## PART 1 GENERAL

1.01 REFERENCES

A. The following is a list of standards which may be referenced in this section:

1. ASTM International (ASTM): C665, Standard Specification for Mineral-Fiber Blanket Thermal Insulation for Light Frame Construction and Manufactured Housing.

1.02 DELIVERY, STORAGE, AND HANDLING

A. On packaging clearly identify manufacturer, contents, brand name, applicable standard, and R-value.

B. Store materials off ground and keep them dry at all times. Protect against weather, condensation, and damage.

## PART 2 PRODUCTS

2.01 BATT INSULATION AND FASTENERS

A. Fiberglass or Mineral Wool Batts: ASTM C665, Type III, Class B, with 0.5 perm rating, reflective aluminum foil vapor retarder membrane laminated to one side with R-values as indicated on Drawings.

1. Manufacturers:
   a. CertainTeed Corp.
   b. Owens-Corning Fiberglas Corp.
   c. Johns Manville.

B. Fasteners: As recommended by insulation manufacturer.

C. Tape: As recommended by insulation manufacturer.

2.02 VINYL-FACED BATT INSULATION

A. Refer to Section 13122, Metal Building Systems.

## PART 3 EXECUTION

### 3.01 BATT INSULATION

A. Install in accordance with manufacturer's instructions and as specified below:

1. Install batt insulation in widths required by framing spacing with vapor retarder facing warm side.
2. Fit tightly to ensure continuous seal. Tape overlapping flanges of vapor retarder when necessary, using tape as recommended by insulation manufacturer.
3. Where electrical outlets, ducts, pipes, vents, or other utility items occur, place insulation on cold weather side of obstruction.
4. Protect installed insulation from tears and other damage until covered with finish material.
5. Remove and replace damaged material.

**END OF SECTION**

# SECTION 07840
# FIRESTOPPING

## PART 1 GENERAL

### 1.01 REFERENCES

A. The following is a list of standards that may be referenced in this section:

1. ASTM International (ASTM): E814, Test Method for Fire Tests of Through-Penetration Firestops.
2. Underwriters Laboratory, Inc. (UL):
   a. 1479, Fire Tests of Through-Penetration Firestops.
   b. 2079, Tests for Fire Resistance of Building Joint Systems.

### 1.02 SYSTEM DESCRIPTION

A. Provide systems of material or combination of materials used to fill openings around penetrating items to prevent the spread of fire and retain integrity of fire rated construction by maintaining an effective barrier against spread of flame, smoke, water, and hot gases through penetrations in fire rated wall assemblies.

B. Provide Fire Safing: Gaps between walls and adjacent wall, floor, and roof structure.

C. Performance Requirements: Provide firestop systems with materials that have been manufactured and installed to maintain performance criteria stated by manufacturer without defects, damage, or failure.

D. Regulatory Requirements:

1. Firestop Systems: Meet requirements of ASTM E814, UL 1479, or UL 2079 tested assemblies that provide a fire rating equal to that of construction being penetrated.
2. Proposed Firestop Materials and Methods: Conform to applicable governing codes having local jurisdiction.
3. Meet F and T ratings of ASTM E814 for a period equal to construction penetrated.
4. Underwriters Laboratories classified as fill, void, or cavity materials under UL 1479.

## 1.03 SUBMITTALS

A. Action Submittals:

1. Shop Drawings: Show layout, profiles, and product components. Include UL Systems Number on Shop Drawings and diagram of UL approved assembly.
2. Product Data: Include manufacturer's SPEC-DATA® product sheet for products selected for use.

B. Informational Submittals:

1. Manufacturer's installation instructions.
2. Test Reports: Certified test reports showing compliance with specified performance characteristics and physical properties.
3. Certificates:
   a. Product certificates signed by manufacturer certifying that materials comply with specified performance characteristics and physical requirements.
   b. Certificate indicating installer qualifications.
   c. Certificate of Proper Installation.
4. Special Guarantee documents specified below.

## 1.04 QUALITY ASSURANCE

A. Installer Qualifications: Experienced in performing Work of this section and specialized in the installation of work similar to that required for this Project.

B. Preinstallation Meetings: Conduct preinstallation meeting to identify where seals are required and verify Project requirements, substrate conditions, manufacturer's installation instructions, and manufacturer's warranty requirements.

## 1.05 DELIVERY, STORAGE, AND HANDLING

A. Coordinate delivery of materials with scheduled installation date to allow minimum storage time at Project Site.

B. Deliver materials in manufacturer's original, unopened, undamaged containers with identification and UL listing mark intact.

C. Store materials under cover and protect from weather and damage in compliance with manufacturer's requirements.

D. Follow recommended procedures, precautions, or remedies described in Material Safety Data Sheets as applicable.

1.06 SEQUENCING AND SCHEDULING

A. Firestopping requirements may be created by mechanical and electrical portions of the Work:

1. Identify locations requiring firestopping.
2. Schedule installation of firestopping after completion of penetrating item installation but prior to covering or concealing of openings.

1.07 SPECIAL GUARANTEE

A. Provide manufacturer's extended guarantee or warranty, with Owner named as beneficiary, in writing, as special guarantee. Special guarantee shall provide for correction, or at the option of the Owner, removal and replacement of Work specified in this section found defective during a period of 2 years after the date of Completion of Startup. Duties and obligations for correction or removal and replacement of defective Work shall be as specified in the General Clauses.

**PART 2 PRODUCTS**

2.01 GENERAL

A. Furnish firestop system products from a single manufacturer.

2.02 MANUFACTURERS

A. 3M Corp.; Firestopping Products.

B. Hilti Construction Chemicals; High Performance Firestop Systems.

C. International Protective Coatings Corp. (IPC); Flamesafe Firestop Products.

D. Isolatek International (Cafco); TPS.

E. Specified Technologies; Inc. (STI).

F. United States Gypsum Co. (USG); Firestop Systems and Thermafiber Safing Insulation.

2.03 MIXES

A. For those products requiring mixing prior to application, follow firestopping manufacturer's directions for accurate proportioning of materials, water (if required), type of mixing equipment, selection of mixer speeds, mixing containers, mixing time, and other procedures needed to produce firestopping products of uniform quality with optimum performance characteristics for application indicated.

**PART 3 EXECUTION**

3.01 EXAMINATION

A. With manufacturer's representative, examine substrates and conditions for compliance with requirements for opening configurations, penetrating items, substrates, and other conditions affecting performance of firestopping. Do not proceed with installation until unsatisfactory conditions have been corrected.

3.02 PREPARATION

A. Surface Cleaning: Clean openings and joints immediately prior to installing firestopping in accordance with firestop manufacturer recommendations and the following requirements:

1. Remove foreign materials from surfaces of opening and joint substrates and from penetrating items that could interfere with adhesion of firestopping.
2. Clean opening and joint substrates and penetrating items to produce clean, sound surfaces capable of developing optimum bond with firestopping. Remove loose particles remaining from cleaning operation.
3. Remove laitance and form release agents from concrete.

B. Priming: Prime substrates where recommended by firestopping manufacturer using that manufacturer's recommended products and methods. Confine primers to areas of bond; do not allow spillage and migration onto exposed surfaces.

C. Masking Tape: Use masking tape to prevent firestopping from contacting adjoining surfaces that will remain exposed upon completion of Work and that would otherwise be permanently stained or damaged by such contact or by cleaning methods used to remove smears from firestopping materials. Remove tape as soon as it is possible to do so without disturbing firestopping seal with substrates.

3.03 INSTALLATION

A. Manufacturer's Instructions: Follow manufacturer's instructions for installation of through-penetration systems selected for use.

1. Seal holes or voids made by penetrations for pipes, conduits and ducts through fire-rated floors, walls, and roofs and to ensure air and water resistant seals.
2. Seal holes or voids made by penetrations for pipes, conduits and ducts through Electrical Room walls and ceiling to ensure air and water resistant seals.
3. Receive Engineer's approval prior to installation of UL firestop systems that might hamper the performance of fire dampers as it pertains to duct work.

B. Fire Safing: Install, following manufacturer's instructions, to completely fill gaps between tops of fire-rated walls and roof deck above, between edge of floors and walls, and other locations indicated on Drawings.

C. Meet Underwriters Laboratories and Factory Mutual requirements.

3.04 FIELD QUALITY CONTROL

A. Examine sealed penetration areas to ensure proper installation before concealing or enclosing areas.

B. Keep areas of Work accessible until inspection by applicable code authorities.

C. Perform patching and repairing of firestopping caused by cutting or penetrating existing firestop systems.

3.05 MANUFACTURER'S SERVICES

A. Provide manufacturer's representative at Site in accordance with Section 01640, Manufacturers' Services, for installation assistance, inspection and certification of proper installation, and training of Installer's personnel in proper installation procedures.

3.06 PROTECTION

A. Protect installed product from contact with contaminating substances and from damage during construction.

**END OF SECTION**

# SECTION 07900
# JOINT SEALANTS

## PART 1 GENERAL

### 1.01 REFERENCES

A. The following is a list of standards which may be referenced in this section:

1. ASTM International (ASTM):
   a. C661, Standard Test Method for Indentation Hardness of Elastomeric Type Sealants by Means of a Durometer.
   b. C834, Standard Specification for Latex Sealants.
   c. C920, Standard Specification for Elastomeric Joint Sealants.
   d. C1193, Standard Guide for Use of Joint Sealants.

### 1.02 SUBMITTALS

A. Action Submittals:

1. Shop Drawings: Surface preparation instructions. Indicate where each product is proposed to be used.

B. Informational Submittals:

1. Installation instructions.
2. Applicator Qualification: Documentation showing minimum of 5 years' experience installing sealants in projects of similar scope.
3. Certificate of Compliance: Proposed materials meet Specification requirements.
4. Special guarantee.

### 1.03 ENVIRONMENTAL REQUIREMENTS

A. Ambient Temperature: Between 40 and 80 degrees F (4 and 27 degrees C) when sealant is applied. Consult manufacturer when sealant cannot be applied within these temperature ranges.

### 1.04 SPECIAL GUARANTEE

A. Product: Furnish manufacturer's extended guarantee or warranty, with Owner named as beneficiary, in writing, as special guarantee. Special guarantee shall provide for correction or, at the option of the Owner, removal and replacement of Work specified in this section found defective during a period of 5 years

after the date of Completion of Startup. Duties and obligations for correction or removal and replacement of defective Work shall be as specified in the General Clauses.

B. Conditions: No adhesive or cohesive failure of sealant.

C. Sealed Joints: Watertight and weathertight with normal usage.

## PART 2 PRODUCTS

### 2.01 SEALANT MATERIALS

A. Sealant Characteristics:

1. Uniform, homogeneous.
2. Free from lumps, skins, and coarse particles when mixed.
3. Nonstaining, nonbleeding.
4. Hardness of 15 minimum and 50 maximum, measured by ASTM C661 method.
5. Immersible may be substituted for nonimmersible.

B. Sealant Color: Unless specifically noted, match the color of the principal material adjoining the area of application.

C. Type 1-Silicone, Nonsag, Nonimmersible:

1. Silicone base, single-component, chemical curing; ASTM C920, Type S, Grade NS, Class 25.
2. Capable of withstanding movement up to 50 percent of joint width.
3. Manufacturers and Products:
   a. Dow Corning Corp.; No. 790.
   b. General Electric; Silpruf.
   c. Sonneborn; Sonolastic Omniseal.

D. Type 5-One-Part Polyurethane, Immersible:

1. Polyurethane base, single-component, moisture curing; ASTM C920, Type S, Grade NS or P, Class 25.
2. Capable of being continuously immersed in water.
3. Manufacturers and Products for Nonsag:
   a. Sika Chemical Corp.; Sikaflex-1a.
   b. Mameco International; Vulkem 116.
4. Manufacturers and Products for Self-Leveling:
   a. Sonneborn; Sonolastic SL-1.
   b. Mameco International; Vulkem 45.

E. Type 7-Multi-Part Polysulfide, Immersible:

1. Polysulfide base, two-component, chemical curing; ASTM C920, Type M, Grade P or NS, Class 25.
2. Capable of being continuously immersed in water.
3. Manufacturers and Products:
   a. W. R. Meadows; CM-60, two-part.
   b. Sonneborn; Sonolastic, two-part.

F. Type 10-Sanitary Sealant: Silicone sealant similar to Type 1, above, formulated to resist mold growth and repeated exposure to high humidity while retaining adhesion, flexibility, and color.

1. Manufacturers and Products:
   a. Dow Corning; 786.
   b. General Electric; Sanitary Sealant.

G. Type 13-Tape Sealant: Compressible polyurethane foam impregnated with polybutylene or polymer-modified asphalt.

1. Color: Black.
2. Size: 3/4-inch wide by length required by expanded thickness recommended by manufacturer for particular application.
3. Manufacturers and Products:
   a. Emseal Joint Systems, Ltd.; 25V.
   b. Polytite Manufacturing Corp.; Standard.
   c. Phoenix Building Products; Compriband.
   d. Koch Protective Treatments, Inc.; Epti 606.
   e. Illbruck; Willseal.
   f. Williams Products, Inc.; Everlastic.

## 2.02 BACKUP MATERIAL

A. Nongassing, extruded, closed-cell round polyethylene foam rod, compatible with sealant used, and as recommended by sealant manufacturer.

B. Size: As shown or as recommended by sealant material manufacturer. Provide for joints greater than 3/16 inch wide.

C. Manufacturers and Products:

1. Haveg Industries; Minicel.
2. Dow Corning; Ethafoam SB.
3. Sonneborn; Sonofoam.
4. Hercules, Inc.; HBR.

2.03 ANCILLARY MATERIALS

A. Bond Breaker: Pressure sensitive tape as recommended by sealant manufacturer to suit application.

B. Joint Cleaner: Noncorrosive and nonstaining type, recommended by sealant manufacturer; compatible with joint forming materials.

C. Primer: Nonstaining type recommended by sealant manufacturer to suit application.

**PART 3 EXECUTION**

3.01 GENERAL

A. Use of more than one material for the same joint is not allowed unless approved by the sealant manufacturer.

B. Install joint sealants in accordance with ASTM C1193.

C. Horizontal and Sloping Joints of 1 Percent Maximum Slope: Use self-leveling (Grade P) joint sealant.

D. Steeper Sloped Joints, Vertical Joints, and Overhead Joints: Use nonsag (Grade NS) joint sealant.

E. Use joint sealant as required for the applicable application and as follows:

| Joint Size | Sealant Type |
|---|---|
| Less than 1" | 1,5, or 7 |
| Less than 2" | 1 or 7 |
| Over 2" | Follow manufacturer's recommendation |

3.02 PREPARATION

A. Verify that joint dimensions, and physical and environmental conditions, are acceptable to receive sealant.

B. Surfaces to be sealed shall be clean, dry, sound, and free of dust, loose mortar, oil, and other foreign materials.

1. Mask adjacent surfaces where necessary to maintain neat edge.
2. Starting of work will be construed as acceptance of subsurfaces.
3. Apply primer to dry surfaces as recommended by sealant manufacturer.

C. Verify that joint shaping materials and release tapes are compatible with sealant.

D. Examine joint dimensions and size materials to achieve required width/depth ratios.

E. Carefully follow manufacturer's instructions for mixing multi-component products.

3.03 INSTALLATION

A. Use joint filler to achieve required joint depths, to allow sealants to perform intended function.

1. Install backup material as recommended by sealant manufacturer.
2. Where possible, provide full length sections without splices; minimize number of splices.
3. Tape sealant may be used as joint filler if approved by sealant manufacturer.

B. Use bond breaker where recommended by sealant manufacturer.

C. Seal joints around window, door and louver frames, expansion joints, and elsewhere as indicated.

D. Joint Sealant Materials: Follow manufacturer's recommendation and instructions, filling joint completely from back to top, without voids.

E. Joints: Tool slightly concave after sealant is installed.

1. When tooling white or light color sealant, use a water wet tool.
2. Finish joints free of air pockets, foreign embedded matter, ridges, and sags.

F. Tape Sealant: Compress to 50 percent of expanded thickness and install in accordance with manufacturer's instructions.

3.04 CLEANING

A. Clean surfaces next to the sealed joints of smears or other soiling resultant of sealing application.

B. Replace damaged surfaces resulting from joint sealing or cleaning activities.

3.05 JOINT SEALANT SCHEDULE

A. This schedule lists the sealant types acceptable for each joint location. Use as few different sealant types as possible to meet the requirements of Project.

| Joint Locations | Sealant Type(s) |
|---|---|
| **Expansion/Contraction & Control Joints At:** | |
| Concrete Walls (except water-holding & belowgrade portions of structures) | 1,5,7 |
| Concrete Floor Slabs (except for water-holding Structures) | 5 |
| Slabs Subject to Vehicle and Pedestrian Traffic | 5 |
| Ceramic Tile Floors | 1,5,10 |
| Ceramic Tile Walls | 1,5,10 |
| **Material Joints At:** | |
| Metal Door, Window, & Louver Frames (Exterior) | 1,5 |
| Metal Door, Window, & Louver Frames (Interior) | 1,5 |
| Wall Penetrations (Exterior) | 1,5 |
| Wall Penetrations (Interior) | 1,5 |
| Floor Penetrations | 5,7 |
| Ceiling Penetrations | 1,5,7 |
| Roof Penetrations | 5 |
| Sheet Metal Flashings | 5,13 |
| Sheet Metal Roofing & Siding | 5 |
| **Other Joints:** | |
| Threshold Sealant Bed | 5 |
| Around Plumbing Fixtures | 10 |
| Openings Around Pipes, Conduits, & Ducts Through Fire-Rated Construction | Refer to Section 07840, Firestopping |

**END OF SECTION**

# SECTION 08001
# DOOR AND HARDWARE SCHEDULE

## PART 1 GENERAL

1.01 SUBMITTALS

A. Submittal requirements are specified in appropriate product sections.

## PART 2 PRODUCTS

2.01 GENERAL

A. Products and materials referred to in this section are specified in the appropriate product sections.

## PART 3 EXECUTION

3.01 GENERAL

A. Requirements for incorporation of scheduled products into the Work are specified in the appropriate product sections.

3.02 SUPPLEMENTS

A. The supplements listed below, following "End of Section," are a part of this Specification.

1. Door and Hardware Schedule: A tabulation of door, frame, and finish hardware characteristics for each opening numbered on Drawings. Provide items as scheduled.
2. Door and Frame Types.

**END OF SECTION**

# DOOR AND HARDWARE SCHEDULE

ABBREVIATIONS:

| | | | |
|---|---|---|---|
| AL | Aluminum | MATL | Material |
| AS | As Selected | MET | Metal |
| CLSR | Closer | MS | Manufacturer's Standard |
| COL | Color | P-P | Push-Pull |
| CONSTR | Construction | RFS | Roll-Up Fire Shutter |
| FCTY | Factory | SC | Solid Core Wood |
| FNSH | Finish | SIM | Similar |
| FRP | Fiberglass Reinforced Plastic | SST | Stainless Steel |
| HC | Hollow Core | TG | Tempered Glass |
| HM | Hollow Metal | TSHD | Threshold |
| KEY | Key Group | W-S | Weatherstripping |
| K-PL | Kick Plate | WG | Wire Glass |

NOTES:

| | |
|---|---|
| No. 1 | See end of this Specification section for door and frame types. |
| No. 2 | For door details, see Design Details. |
| No. 3 | Letter-number codes in hardware columns refer to items of hardware in Specification Section 08710 |
| No. 4 | Numbers in "Fnsh" column refer to paint systems in Specification Section 09900. |
| No. 5 | Codes in "COL" column refer to color list in Specification Section 09000. |
| No. 6 | For glass types, see Specification Section 08800. |
| No. 7 | Existing door. Provide new paint for door and frame as scheduled. Provide new hardware as scheduled. |
| No. 8 | Provide door and frame in size to suit existing rough opening. |
| No. 9 | Refer to Specification Section 09900 for surface preparation. |

| Opening | | | | | | | | | | | | | | | Hardware | | | | | | | | | | | Fire Protection Rating | Other Requirements |
|---|---|---|---|---|---|---|---|---|---|---|---|---|---|---|---|---|---|---|---|---|---|---|---|---|---|---|---|
| | Size | | Door | | | | | Frame | | | | Details | | | | | | | | | | | | | | | |
| No. | Width | Height | Constr | Type | Glass | Fnsh | Col | Matl | Type | Fnsh | Col | Head | Jamb | Sill | Hinge | Lock | Exit | Clsr | P-P | Stop | Bolt | K-PL | Tshd | W-S | Misc | | |
| 101A | 3'-0" | 7'-0" | HM | G | TG | 6 | P-1 | HM | F-1 | 6 | P-1 | 8109 | 8110 | 8701 | H1 | L2 | X1 | C6 | -- | -- | -- | -- | T1 | W1 | -- | -- | -- |
| 101B | -- | -- | -- | -- | -- | 6 | P-1 | -- | -- | 6 | P-1 | -- | -- | -- | -- | -- | -- | -- | -- | -- | -- | -- | -- | -- | -- | -- | Note 9 |
| 101C | 3'-0" | 7'-0" | HM | G | TG | 6 | P-1 | HM | F-1 | 6 | P-1 | 8109 | 8110 | 8701 | H1 | L12 | X2 | C6 | -- | -- | -- | -- | T1 | W1 | -- | -- | -- |
| 101D | -- | -- | -- | -- | -- | 6 | P-1 | -- | -- | 6 | P-1 | -- | -- | -- | -- | L12 | X2 | -- | -- | -- | -- | -- | -- | W1 | -- | -- | Note 7 |
| 102A | 3'-0" | 7'-0" | HM | N | WG | 6 | P-1 | HM | F-1 | 6 | P-1 | 8137 | 8137 | 8702 | H1 | L2 | -- | C1 | -- | S1 | -- | -- | T1 | W2 | M1 | 1 HR | "Control Room" |
| 102B | 3'-0" | 7'-0" | HM | G | TG | 6 | P-1 | HM | F-1 | 6 | P-1 | 8132 | 8132 | 8703 | H1 | L6 | -- | C4 | -- | -- | -- | -- | -- | -- | -- | -- | -- |
| 102C | 3'-0" | 7'-0" | HM | G | TG | 6 | P-1 | HM | F-1 | 6 | P-1 | 8132 | 8132 | 8703 | H1 | L2 | -- | C4 | -- | -- | -- | -- | -- | -- | M1 | -- | "Control Room" |
| 103A | 3'-0" | 7'-0" | HM | F | -- | 6 | P-1 | HM | F-1 | 6 | P-1 | 8137 | 8137 | 8702 | H1 | L2 | -- | C1 | -- | S2 | -- | -- | T1 | W2 | M1 | 1 HR | "Locker Room" |
| 103B | 3'-0" | 7'-0" | HM | F | -- | 6 | P-1 | HM | F-1 | 6 | P-1 | 8132 | 8132 | 8703 | H1 | L2 | -- | C2 | -- | S2 | -- | -- | -- | -- | M1 | -- | "Locker Room" |
| 103C | 3'-0" | 7'-0" | HM | F | -- | 6 | P-1 | HM | F-1 | 6 | P-1 | 8132 | 8132 | 8704 | H1 | L9 | -- | C4 | -- | -- | -- | -- | T1 | -- | M1 | -- | "Shower Room" |

| Opening | | | | | | | | | | | | | | | Hardware | | | | | | | | | | | Fire Protection Rating | Other Requirements |
|---|---|---|---|---|---|---|---|---|---|---|---|---|---|---|---|---|---|---|---|---|---|---|---|---|---|---|---|
| | Size | | Door | | | | | Frame | | | | Details | | | | | | | | | | | | | | | |
| No. | Width | Height | Constr | Type | Glass | Fnsh | Col | Matl | Type | Fnsh | Col | Head | Jamb | Sill | Hinge | Lock | Exit | Clsr | P-P | Stop | Bolt | K-PL | Tshd | W-S | Misc | | |
| 104A | Note 8 | Note 8 | HM | G | TG | 6 | P-1 | HM | F-1 | 6 | P-1 | 8111 | 8112 | 8701 | H1 | L2 | -- | C6 | -- | -- | -- | -- | T1 | W1 | M1 | -- | -- |
| 105A | 3'-0" | 7'-0" | HM | F | -- | 6 | P-1 | HM | F-1 | 6 | P-1 | 8132 | 8132 | 8704 | H1 | L9 | -- | C2 | -- | S2 | -- | -- | -- | -- | M2 | -- | "Restroom" |
| 106A | 4'-0" | 7'-0" | HM | G | TG | 6 | P-1 | HM | F-2 | 6 | P-1 | 10210 | 8110 SIM | 8701 | H1 | L2 | -- | C6 | -- | -- | -- | -- | T1 | W1 | -- | -- | -- |
| 106B | Note 8 | Note 8 | HM | N | WG | 6 | P-1 | HM | F-1 | 6 | P-1 | 8137 SIM | 8137 SIM | 8702 | -- | L2 | -- | C6 | -- | S2 | -- | -- | T1 | W2 | M1 | 1 HR | Note 7 "Electrical Room" |
| 107A | (2)3'-0" | 7'-0" | HM | G | TG | 6 | P-1 | HM | F-3 | 6 | P-1 | 10210 | 8110 SIM | 8701 | (2)H1 | L2 | -- | C6 | -- | -- | B1 | -- | T1 | W3 | M7 | -- | -- |

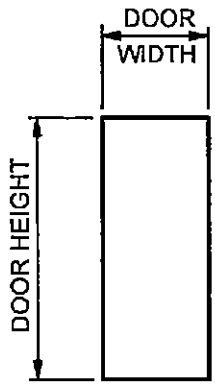


F

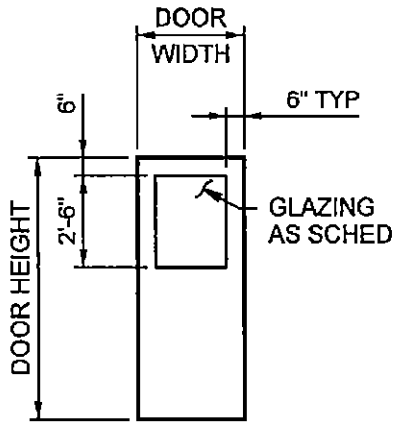


G

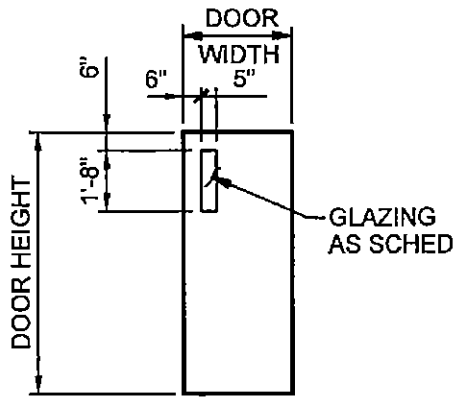


N

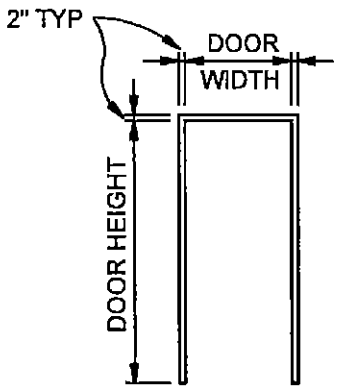


F-1

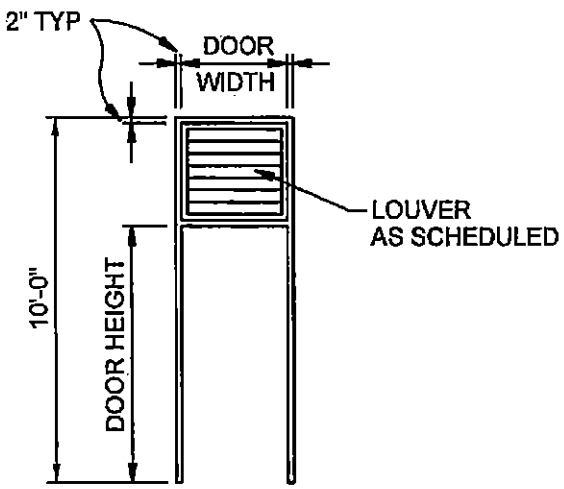


F-2

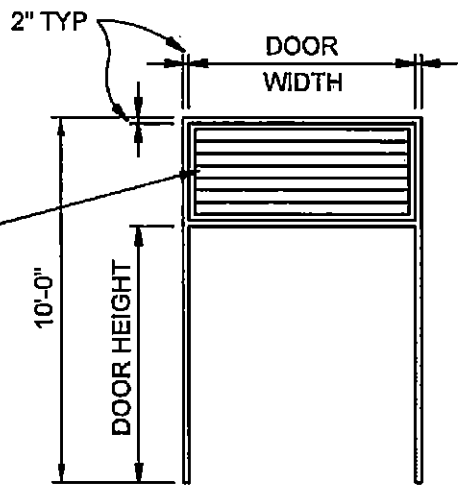


F-3

LOUVER
AS SCHEDULED

## DOOR AND FRAME TYPES

# SECTION 08002
# WINDOW AND RELIGHT SCHEDULE

## PART 1 GENERAL

1.01 SUBMITTALS

A. Submittal requirements are specified in appropriate material sections.

## PART 2 PRODUCTS

2.01 GENERAL

A. Products and materials referred to in this section are specified in appropriate product sections.

## PART 3 EXECUTION

3.01 GENERAL

A. Requirements for incorporation of scheduled products into the Work are specified in appropriate product sections.

3.02 SUPPLEMENTS

A. The supplements listed below, following "End of Section," are a part of this Specification.

1. Window and Relight Schedule: A tabulation of window, relight, glazing, and treatment characteristics for each opening numbered on Drawings. Provide items as scheduled.
2. Window and Relight Types.

**END OF SECTION**

# WINDOW AND RELIGHT SCHEDULE

WINDOW TYPE ABBREVIATIONS:

| | |
|---|---|
| F | Fixed |
| TH | Top Hinged (Outward Swinging) |

OTHER ABBREVIATIONS:

| | | | |
|---|---|---|---|
| AFF | Above Finish Floor | HM | Hollow Metal |
| AL | Aluminum | STL | Steel |
| AS | As Selected | TG | Tempered Glass |
| CLR | Clear | WG | Wire Glass |
| FCTY | Factory | | |
| FRP | Fiberglass Reinforced Plastic | | |

NOTES:

No. 1 For frame types, see following page.
No. 2 For frame details, see Design Details.
No. 3 For glass types, see Specification Section 08800.
No. 4 Codes in COL column refer to color list in Specification Section 09000.
No. 5 Numbers in Fnsh column refer to paint systems in Specification Section 09900.

| Opening | | | | | | Frame | | | | | | | | | |
|---|---|---|---|---|---|---|---|---|---|---|---|---|---|---|---|
| | Size | | Window | | | | | | | Details | | | Blinds | | |
| No. | Width | Height | Type | Glass | Col | Matl | Type | Fnsh | Col | Head | Jamb | Sill | Y/N | Col | Other Requirements |
| W-1 | 3'-4" | 4'-0" | TH | IG | CLR | AL | WF-1 | FCTY | O-2 | 8503 | 8504 | 8503 | N | -- | Sill at 3'-4" AFF |
| W-2 | 3'-4" | 4'-0" | TH | IG | CLR | AL | WF-1 | FCTY | O-2 | 8503 | 8504 | 8503 | N | -- | Sill at 3'-4" AFF |
| R-1 | 3'-0" | 3'-0" | F | WG | CLR | HM | RF-1 | 6 | P-1 | 8136 | 8136 | 8136 | N | -- | Sill at 3'-6" AFF |
| | | | | | | | | | | | | | | | |
| | | | | | | | | | | | | | | | |
| | | | | | | | | | | | | | | | |

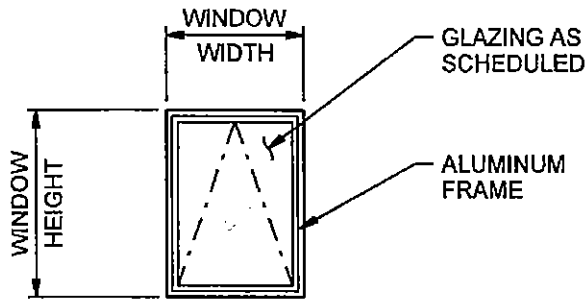


WF-1

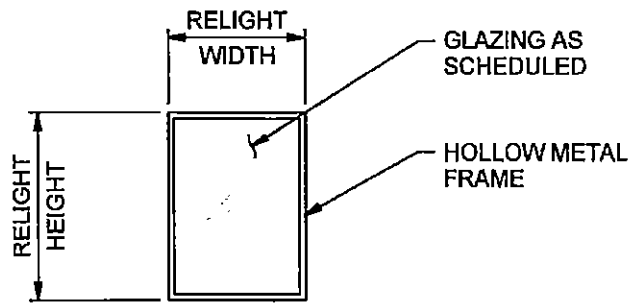


RF-1

# WINDOW AND RELIGHT TYPES

# SECTION 08110
# STEEL DOORS AND FRAMES

## PART 1 GENERAL

### 1.01 REFERENCES

A. The following is a list of standards which may be referenced in this section:

1. American National Standards Institute (ANSI):
   a. A250.6, Hardware on Standard Steel Doors (Reinforcement - Application).
   b. A250.8, Steel Doors and Frames.
2. ASTM International (ASTM):
   a. A366/A366M, Standard Specification for Commercial Steel (CS) Sheet, Carbon (0.15 Maximum Percent), Cold-Rolled.
   b. A653/A653M, Standard Specification for Steel Sheet, Zinc-Coated (Galvanized) or Zinc-Iron Alloy-Coated (Galvannealed) by the Hot-Dip Process.
3. Door and Hardware Institute (DHI): A115, Specifications for Hardware Preparations in Standard Steel Doors and Frames.
4. National Fire Protection Association (NFPA): 80, Standard for Fire Doors and Fire Windows.
5. Steel Door Institute (SDI): 105, Recommended Erection Instructions for Steel Frames.
6. Underwriters Laboratories, Inc. (UL): Building Materials Directory.

### 1.02 SUBMITTALS

A. Action Submittals: Applicable information for each type of door and frame, including:

1. Frame conditions and complete anchorage details, supplemented by suitable schedules covering doors and frames.
2. Glass and louver opening sizes and locations in doors.
3. Connections of door frames to structural steel framing concealed in frames.
4. Location and field splice joints for frames too large to ship in one piece; indicate complete instructions for making field splices.
5. Joints required to accommodate expansion joint movement.
6. Relate to door numbers used in Contract Drawings.

1.03 DELIVERY, STORAGE, AND HANDLING

A. Properly identify each item with number used in Contract Drawings.

B. Store doors upright, in protected dry area, at least 1 inch off ground or floor and at least 1/4 inch between individual pieces.

## PART 2 PRODUCTS

2.01 MANUFACTURERS

A. Curries Manufacturing.

B. The Ceco Corp.

C. Fenestra Division, Marmon Group.

D. Mesker Industries, Inc.

E. Monarch Steelcraft, Ltd.

F. Overly Manufacturing Co.

G. Pioneer Industries.

H. Precision Metals, Inc.

I. Republic Steel Corp.

J. Steelcraft Manufacturing Co.

K. Trussbilt, Inc.

L. Williamsburg Steel Products Co.

M. Stiles Custom Metal, Inc.

2.02 MATERIALS

A. Basic Metal Material: ASTM A366; sheet steel, cold-rolled, stretcher level.

B. Hollow Metal Frames:

1. Products of hollow metal door manufacturer.
2. ANSI 250.8, except as modified herein.
3. Frames for Doors and Relights: 16 gauge for interior and 14 gauge, with thermal break, for exterior, welded type, of cross-section shown.

4. Prepare floor and wall anchors, reinforcement, and cutouts for hardware to meet requirements of DHI A115 and ANSI A250.6.
5. Finished size, shape, and profile of frame members as shown.
6. Concealed fasteners or welding are preferred to through-the-face fasteners.
7. Identification: Stamp opening number, as shown on Drawings, on center hinge reinforcement of each frame.

C. Hollow Metal Doors: ANSI A250.8, except as modified herein. DHI A115 and ANSI A250.6 to receive hardware specified in Door and Hardware Schedule.

1. Interior:
   a. Flush Panel Doors: 18 gauge, Level 2, Model 2.
   b. Flush end closure at top of doors.
2. Exterior:
   a. Flush Panel Doors: 16 gauge, Level 3, Model 2.
   b. Double Doors: Overlapping astragals for active leaf, except as noted or detailed otherwise.
   c. Flush end closure at top of doors.

D. Labeled Fire Doors and Frames:

1. Conform to listing requirements of Underwriters Laboratories, Inc. (UL).
2. Label each door and frame for class of rating required.
3. Overlapping astragal on active leaf of double doors.
4. Label requirements, dimensions, and type of door are indicated in Door and Hardware Schedule.
   a. Modify drawing details if required to secure label.
   b. Clearly identify modifications on Shop Drawings.
   c. Maximum temperature rise of 450 degrees F for stairway enclosures.

E. Glazing:

1. Doors: Furnish with formed flush-type glazing strips with butt corner joints to permit selection of secure side in field.
2. Glazing Arrangements: Accommodate glass of type and thickness indicated and as specified in Section 08800, Glazing.

## 2.03 MISCELLANEOUS ITEMS

A. Filler or Transom Panels: Furnish of same construction and finish as door to include fire-resistive label and sound-retardant construction.

B. Furnish manufacturer's standard core filler, anchors, fasteners, and other ancillary items.

2.04 FACTORY FINISHING REQUIREMENTS

A. Galvanized with A60 zinc coating in accordance with ASTM A653/A653M (Wipe Coat galvanized coating is not acceptable).

B. Phosphate treat metal for paint adhesion.

C. One shop coat of baked-on rust-inhibiting prime coating compatible with finish coating as specified in Section 09900, Painting and Protective Coatings.

## PART 3 EXECUTION

3.01 INSTALLATION

A. Frames: Follow SDI 105 and manufacturer's instructions.

1. Maintain scheduled dimensions, hold head level, and maintain jambs plumb and square.
2. Secure anchorages and connections to adjacent construction.
3. Wherever possible, leave frame spreader bars intact until frames are set perfectly square and plumb and anchors are securely attached.

B. Doors:

1. Hollow Metal Doors: ANSI A250.8.
2. Hardware: In accordance with manufacturer's templates and instructions.
   a. Adjust operable parts for correct function.
   b. Remove hardware, with exception of prime coated items, tag, box, and reinstall after finish paint work is completed.
3. Labeled Doors: NFPA Pamphlet No. 80.

3.02 FIELD PAINTING

A. Where prime coat has been damaged, sand smooth and touch up with same primer as applied at shop.

1. Remove rust before painting.
2. Touch Up: Not obvious.
3. Perform immediately after door and frame installation.

3.03 PROTECTION

A. Protect installed doors and frames against damage from other construction work.

3.04 SCHEDULES

A. For tabulation of door and frame characteristics, such as size, type, detail, and finish hardware requirements, see Section 08001, Door and Hardware Schedule.

**END OF SECTION**

# SECTION 08300
# SPECIAL DOORS

## PART 1 GENERAL

1.01 SUBMITTALS

A. Manufacturer's product information.

1.02 DELIVERY, STORAGE, AND HANDLING

A. Deliver doors with separators and wrapping to protect units from damage during and after installation.

B. Store doors in protected dry area following manufacturer's requirements.

C. Handle doors according to manufacturer's instructions.

D. Protect exposed finish surfaces of prefinished items with wrapping.

## PART 2 PRODUCTS

2.01 ACCESS DOORS

A. Manufacturers:

1. J.L. Industries, Bloomington, MN.
2. Milcor Inc., Lima, OH.
3. J. R. Smith, Montgomery, AL.

B. Manufactured Unit(s): Flush panel access doors and frames with anchors to suit wall conditions. Recessed panel doors and frames with anchors to suit ceiling and wall conditions.

C. Size: Smallest standard size permitting ready access and removal of working parts, but not less than 12 inches square and as shown on Drawings.

D. Door: 18-gauge minimum steel with recess to receive finished ceiling material.

E. Frames:

1. Dry Wall Type: 16-gauge steel with outer flange in a dry wall bead configuration for application of joint compound.

F. Hinges: Spring-loaded concealed hinges permitting a minimum of 160-degree door travel and door removal.

G. Locks: Flush screw driver operated.

H. Rated Panel Hardware:

1. Automatic self-closing device.
2. Self-latching lock.

I. Finish: One coat of corrosion-inhibiting primer.

## PART 3 EXECUTION

### 3.01 INSTALLATION

A. Install special doors in accordance with the manufacturer's recommendations and printed instructions.

B. Adjust doors for smooth, satisfactory operation.

### 3.02 ACCESS DOOR INSTALLATION

A. Install access doors where shown on Drawings and at all cleanouts, valves, or other equipment requiring adjustment or servicing concealed within wall, furred spaces, or ceilings.

### 3.03 PRIME COAT TOUCHUP

A. Damaged Prime Coat:

1. Remove rust.
2. Sand smooth.
3. Use same primer as shop.
4. Touch up so it is not obvious.

### 3.04 PROTECTION

A. Protect installed doors against damage from other construction work.

**END OF SECTION**

# SECTION 08520
# ALUMINUM WINDOWS

## PART 1 GENERAL

### 1.01 REFERENCES

A. The following is a list of standards which may be referenced in this section:

1. The Aluminum Association, Incorporated (AA): Designation System for Aluminum Finishes.
2. American Architectural Manufacturers Association (AAMA):
   a. 101, Voluntary Specifications for Aluminum and Poly(Vinyl Chloride) (PVC) Prime Windows and Glass Doors.
   b. 701, Combined Voluntary Specification for Pile Weather Strip.
   c. 800, Voluntary Specification and Test Methods for Sealants.
   d. 2605, Voluntary Specification, Performance Requirements and Test Procedures for Superior Performing Organic Coatings on Architectural Extrusions and Panels.
3. ASTM International (ASTM):
   a. A123, Standard Specification for Zinc (Hot-Dip Galvanized) Coatings on Iron and Steel Products.
   b. B456, Standard Specification for Electrodeposited Coatings of Copper Plus Nickel Plus Chromium and Nickel Plus Chromium.
   c. B633, Standard Specification for Electrodeposited Coatings of Zinc on Iron and Steel.
   d. C509, Standard Specification for Elastomeric Cellular Preformed Gasket and Sealing Material.
   e. C864, Standard Specification for Dense Elastomeric Compression Seal Gaskets, Setting Blocks, and Spacers.
   f. D1187, Standard Specification for Asphalt-Base Emulsions for Use as Protective Coatings for Metal.
   g. D3656, Standard Specification for Insect Screening and Louver Cloth Woven from Vinyl-Coated Glass Yarns.
   h. E283, Standard Test Method for Determining the Rate of Air Leakage Through Exterior Windows, Curtain Walls, and Doors Under Specified Pressure Differences Across the Specimen.
   i. E330, Standard Test Method for Structural Performance of Exterior Windows, Curtain Walls, and Doors by Uniform Static Air Pressure Difference.
   j. E331, Standard Test Method for Water Penetration of Exterior Windows, Curtain Walls, and Doors by Uniform Static Air Pressure Difference.

1.02 SUBMITTALS

A. Action Submittals:

1. Shop Drawings:
   a. Large scale details and layout of windows, operators, anchorages, and adjoining construction with all materials indicated accurately to scale.
   b. Manufacturer's literature including brochures or catalogs, specifications, instructions, and standard details illustrating products proposed for use and other window products available.
2. Samples: Finish on aluminum in sets of two, indicating light and dark extremes, to be used in evaluating products furnished.

B. Informational Submittals:

1. Manufacturer's Certification of Compliance.
2. Reports of factory quality control tests.

1.03 QUALITY ASSURANCE

A. All Units: Meet construction and testing requirements of ANSI/AAMA 101, Voluntary Specifications for Aluminum and Poly(Vinyl Chloride) (PVC) Prime Windows and Glass Doors, and carry the quality certified label of AAMA.

1.04 DELIVERY, STORAGE, AND HANDLING

A. Store window units in vertical upright position and off the ground on dunnage, preferably inside a building.

B. Protect units from weather, abuse, defacement, and damage.

C. Store units inside in areas free of dust and corrosive fumes, as close as possible to point of installation.

D. Prevent contaminants from contacting aluminum.

E. Keep water away from stored units and assemblies.

F. Handle units according to recommendations of AAMA.

1.05 SPECIAL GUARANTEE

A. Provide manufacturer's extended guarantee or warranty, with Owner named as beneficiary, in writing, as special guarantee. Special guarantee shall provide

for correction, or at option of Owner, removal and replacement of Work specified in this Specification section found defective during period of 5 years after date of Completion of Startup. Duties and obligations for correction or removal and replacement of defective Work shall be as specified in General Clauses.

## PART 2 PRODUCTS

### 2.01 MATERIALS

A. Aluminum: Proper alloy and temper to meet specified requirements.

B. Hardware: Corrosion-resistant and compatible with aluminum; suitable for intended use and the same as used on the tested units.

C. Anchors and Fasteners:

1. Exposed: Aluminum or Type 304 stainless steel.
2. Concealed: Aluminum, cadmium-plated steel, ASTM B633 or ASTM A123 zinc-plated steel, or Type 304 stainless steel.
3. Concealed anchors may be of carbon steel, painted after fabrication with zinc chromate primer.
4. Other Fasteners and Components: Carbon steel or ASTM B456 Nickel plus Chromium plated.

D. Sealants:

1. AAMA 800 to seal metal to metal, nonworking joints.
2. Color to be compatible with adjacent materials.

E. Weatherstripping: High quality materials capable of meeting environmental exposure and performance requirements.

1. Pile Weatherstrip: AAMA 701.
2. Closed Cell Elastomer: ASTM C509.
3. Dense Elastomer: ASTM C864.

F. Glass and Glazing: As Specified in Section 08800, Glazing.

### 2.02 FABRICATION

A. Fabricate and assemble frame, sash, and ventilator members into windows and window systems in accordance with reviewed Shop Drawings, and as required by AAMA 101.

B. Mechanical fasteners, welded components, and hardware items shall not bridge thermal barriers unless the window units tested also have thermal bridges.

C. Sealing Insulating Glass Units: Designed so that water entering space around unit will drain and not remain in contact with edge seal of the glass.

D. Glazing Beads:

1. Sloped and coped to uniformly tight hairline joints at corners.
2. Material may be prefinished.

2.03 FINISH

A. Finish components after fabrication, except those that may be prefinished as specified.

B. Exposed framing members shall be free of scratches and other surface blemishes.

C. Pigmented Organic Coating: AAMA 2605, color as shown in Section 08002, Window and Relight Schedule.

2.04 ANCILLARY MATERIALS

A. Isolation Tape:

1. Manufacturers and Products:
   a. Tremco; 440.
   b. 3M; EC1202.
   c. Presstite; 579.6

B. Isolation Paint: Bituminous coating conforming to ASTM D1187.

C. Screens:

1. Furnish rigid metal frame screens to match window frames.
2. ASTM D3656, Class 1, 18 by 16 mesh.

2.05 TOP HINGED OUTSWING WINDOWS

A. Meet requirements of AAMA 101 Designation TH-HC65.

B. Hardware:

1. Continuous integrally extruded hinge completely concealed when window is closed.
2. Locking Method: Custodial locks operated by a single removable key.
3. Hold-open Device: Support arms with cam handles, 4 bar hinges and limit arm.

C. Manufacturers and Products:

1. Kawneer; Sealair Outswing Window.
2. Or approved equal.

2.06 SOURCE QUALITY CONTROL

A. Tests:

1. Resistance to Air Infiltration: No greater than 0.06 cfm per square foot of fixed area, as tested in accordance with ASTM E283.
2. Resistance to Water Infiltration: No leakage in frame at test pressure difference of 8 psf, as tested in accordance with ASTM E331.
3. Resistance to Uniform Loading: When tested under load of 20 psf, in accordance with ASTM E330:
   a. Maximum Deflection: No greater than 1/175 times span for any member.
   b. When load is removed, no evidence of permanent deformation or damage.

**PART 3 EXECUTION**

3.01 PREPARATION

A. Verify dimensions by taking measurements at the Site.

B. Verify that openings are within allowable dimensional tolerances, are plumb, level, clean, and provide a solid anchoring surface.

C. Verify conformance with Shop Drawings and that dimensions and conditions are correct before installing windows.

3.02 INSTALLATION

A. Window and Window Components:

1. Plumb and align window faces in a single plane for each wall plane.

2. Erect windows and materials square and true and in proper alignment with other work, anchored to maintain position when subjected to normal thermal and building movement and 30 pounds per square foot wind loads.
3. Install in accordance with manufacturer's instructions.
4. Installation shall be weathertight as specified under Article Source Quality Control.

B. Coat aluminum surfaces in contact with dissimilar metals with isolation paint, sealant, or isolation tape cut to neat line.

3.03 GLAZING

A. Glass may be factory or field installed.

B. Install in accordance with Section 08800, Glazing, and glass manufacturer's instructions.

3.04 ADJUSTING AND CLEANING

A. Remove protective materials and clean windows with potable water, or water with household soap or detergent.

B. Adjust windows for proper operation after installing.

C. Lubricate hardware and movable units.

D. Leave windows in closed position after adjusting and cleaning.

3.05 PROTECTION

A. Protect installed window units from materials that could cause damage, such as lime, mortar, runoff from concrete and copper, careless handling of tools, weld splatter, acids, roofing asphalt, solvents, and abrasive cleaners.

3.06 SCHEDULE

A. For window types, sizes, glass, and other requirements, see Section 08002, Window and Relight Schedule.

**END OF SECTION**

# SECTION 08710
# DOOR HARDWARE

## PART 1 GENERAL

### 1.01 REFERENCES

A. The following is a list of standards which may be referenced in this section:

1. American National Standards Institute (ANSI): A117.1, Buildings and Facilities-Providing Accessibility and Usability for Physically Handicapped People.
2. Builders Hardware Manufacturer's Association (BHMA):
   a. A156.1, Butts and Hinges.
   b. A156.2, Bored and Preassembled Locks and Latches.
   c. A156.3, Exit Devices.
   d. A156.4, Door Controls - Closers.
   e. A156.16, Auxiliary Hardware.
   f. A156.18, Materials and Finishes.
3. Underwriters Laboratories, Inc. (UL): Fire Protection Equipment List.

### 1.02 SUBMITTALS

A. Action Submittals:

1. Shop Drawings:
   a. Product Data: Manufacturer's literature for each item of finish hardware required herein, clearly marked.
   b. Finish Hardware Schedule: Furnish complete and detailed schedule, show product items, numbers, and finishes for hardware for each separate opening.
   c. Special Tools: Provide listing and description of usage.

B. Informational Submittals:

1. Operation and Maintenance Data as specified in Section 01430, Operation and Maintenance Data.
2. Manufacturer's Field Service Report.
3. Certification of Hardware Consultant.
4. Manufacturer's Certificate of Proper Installation, in accordance with Section 01640, Manufacturers' Services.

1.03 QUALITY ASSURANCE

A. Qualifications of Supplier: Recognized supplier of architectural finish hardware, with warehousing facilities, who has been furnishing hardware in vicinity of Project for not less than 5 years, and who is, or who employs, architectural hardware consultant.

B. Qualifications of Architectural Hardware Consultant (AHC): Certified by Door and Hardware Institute.

1.04 DELIVERY, STORAGE, AND HANDLING

A. Before delivery, clearly identify and tag each item of hardware with respect to specified description and location of installation.

B. Provide secure storage for finish hardware until installation is made.

1.05 EXTRA MATERIALS

A. Special Tools: Two sets for installation and maintenance of hardware.

**PART 2 PRODUCTS**

2.01 MATERIALS

A. Provide end products of one manufacturer for each product in order to achieve standardization for appearance, maintenance, and replacement.

B. Finishes: BHMA A156.18.

2.02 FASTENERS

A. Stainless steel.

2.03 BUTT HINGES

A. BHMA A156.1.

B. Quantity per Door Leaf (Minimum):

| Door Height | Hinges |
|---|---|
| Up to 5'-0" | 1 pair |
| 5'-1" to 7'-7" | 1-1/2 pair |
| 7'-8" to 10'-0" | 2 pairs |
| 10'-1" to 12'-6" | 2-1/2 pairs |

C. Hinge Height (Minimum):

| Door Width | Hinge Height |
|---|---|
| Up to 3'-0" | 4-1/2" |
| 3'-1" to 4'-0" | 5" |
| Over 4'-0" | 6" |

D. Width: Minimum for clearance of trim and 180-degree swing.

E. Exterior Hinges: Nonremoveable pin.

F. Joint Tolerance: 0.012 inch maximum, gauged in CLOSED position.

G. Finish: Satin stainless steel No. 630.

H. Types and Manufacturers:

| No. | Type Description | Stanley | Mc-Kinney | Lawrence | BHMA |
|---|---|---|---|---|---|
| H1 | Regular weight, two ball-races, full mortise, stainless steel | FBB191-32D | TB2314 | BB4101-32D | A5112 |

2.04 LOCKS AND LATCH SETS

A. Cylindrical or Bored Locks: BHMA A156.2, highest grade.

1. Trim: Wrought or cold-forged metal knobs and roses.
2. Core Cylinders: Interchangeable, removable; minimum of six pins.
3. Strikes: Lip dimensions to fit configuration of trim.
4. Bolt Throw: 3/4 inch minimum, on latchbolts for pair of doors.
5. Lever Backset: 2-3/4 inches.
6. Manufacturers and Products:
   a. Sargent; 10 Line, L Series.
   b. Schlage; D Series, Rhodes.

c. Best; 9K Series, 14C.

B. Tactile Warning: Knurl lever handles for touch identification; ANSI A117.1, Section 4.29.3.

C. Finish: Satin chromium-plated No. 626.

D. Types and Manufacturers:

| No. | Type Description | Best | Sargent | Schlage | BHMA |
|---|---|---|---|---|---|
| L2 | Bored, entrance lock | 93K7AB4C | 10G05 | ND50PD | F81, F82 |
| L6 | Bored, utility room lock | 93K7D4C | 10G04 | ND80PD | F86 |
| L9 | Bored, privacy lock | 93K0L4C | 10U65 | ND40S | F76 |
| L12 | Bored, exit only, lock | 93K0Y4C | 10G13 | ND12D | F89 |

E. Keying:

1. Lock Cylinders: Operate by master key system that allows for future expansion.
2. Keylocks: As directed by Owner.
3. Keys: Two per lock; tag with schedule information.
4. Master Keys: Four; send by registered mail to Owner.

2.05 CONSTRUCTION KEY SYSTEM

A. Removable construction core system for locks.

B. See Article Manufacturer's Services under Part 3, Execution.

2.06 EXIT DEVICES

A. BHMA A156.3.

B. Furnish fire exit devices at fire-rated doors.

C. Removable Mullion: By exit device manufacturer.

D. Trim:

1. Levers: Sargent LNH; Von Duprin 03.

E. Finish:

1. Exit Device: Satin chromium-plated No. 626.
2. Removable Mullion: Wrought steel or aluminum with prime coat, 980.

F. Types and Manufacturers:

| No. | Type Description | Sargent | VonDuprin | BHMA |
|---|---|---|---|---|
| X1 | Rim type, active leaf; with removable mullion for pairs | 8813ETH | 99L | Type 1 08 |
| X2 | Rim type, exit only | 8810 | 99EO | Type 1 01 |

2.07 CLOSERS

A. BHMA A156.4.

B. Size closers in accordance with manufacturer's standards. Mount regular arm closers on pull side of doors. Mount parallel arm closers on push side of doors. On pair of doors provide closer on active leaf only, unless noted otherwise.

C. Finish: Manufacturer's standard painted or powder coated finish, with special rust inhibiting (SRI) pretreatment, in color selected by Engineer from manufacturer's standard color range.

D. Types and Manufacturers:

| No. | Type/Description | LCN | Sargent | BHMA |
|---|---|---|---|---|
| C1 | Regular arm | 4010 Series | 350 Series | C02011 |
| C2 | Parallel arm | 4110 Series | 350-P Series | C02021 |
| C4 | Parallel arm with integral stop | 4110 Cush-N-Stop Series | 350-PS Series | C02021 |
| C6 | Parallel arm with integral stop and hold-open | 4110H Cush-N-Stop Series | 350-PSH Series | C02061 |

2.08 STOPS AND HOLDERS

A. BHMA A156.16.

B. Machine Screws: In threaded anchors at concrete or masonry.

C. Self-Tapping Screws: At stud partitions, wood, or metal mountings.

D. Metal Risers: For mounting at carpet floors.

E. Finish: Satin chromium-plated No. 626.

F. Types and Manufacturers for Each Leaf:

| No. | Type Description | BBW or GJ | Baldwin | BHMA |
|---|---|---|---|---|
| S1 | Floor stop | F121X | 4086 | L02131 |
| S2 | Wall bumper | WC9X | 4031 | L02241 |

2.09 BOLTS

A. BHMA A156.16.

B. Finish: Bright nickel No. 645.

C. Types and Manufacturers:

| No. | Type/Description | Stanley | Lawrence | BHMA |
|---|---|---|---|---|
| B1 | Top and bottom flush bolts | 393-1/2 | 280 | L04201 |

2.10 THRESHOLDS

A. Thresholds: One-piece full width of opening; extend beyond jamb where indicated.

B. Provide with stainless steel machine screws in threaded expansion anchors at concrete.

C. Finish: Mill finish aluminum, unless indicated otherwise.

D. Types and Manufacturers:

| No. | Type Description | Pemko | Reese |
|---|---|---|---|
| T1 | Saddle (smooth, 4" x 1/2") | 175A | S104A |

## 2.11 WEATHERSTRIP

A. Finish: Clear anodized aluminum, unless indicated otherwise.

B. Seal Types and Manufacturers:

| No. | Type Description | Pemko | Reese |
|---|---|---|---|
| W1 | Rubber or vinyl bulb at jambs and head, and at meeting stiles of pairs | S88D | 797B |
| | Door shoe | 222AV | DB596AF |
| | Rain drip | 346C | R201C |
| W2 | Rubber or vinyl bulb at jambs and head, and at meeting stiles of pairs | S88D | 797B |
| | Door shoe | 222AV | DB596AF |
| W3 | Rubber vinyl bulb at jambs and head, and at meeting stiles of pairs | S88D | 797B |
| | Door bottom with drip | 345AV | 353A |
| | Interlocking watershed | 68 AR & 347A | 202C & 203C |

## 2.12 MISCELLANEOUS ITEMS

A. Provide as indicated in Door and Hardware Schedule:

| | | | |
|---|---|---|---|
| M1 | Nameplate as specified in Section 10400, Identifying Devices, in text noted in Door and Hardware Schedule | | |
| M2 | Nameplate and barrier-free pictorial symbol as specified in Section 10400, Identifying Devices, in text noted in Door and Hardware Schedule | | |
| M7 | Coordinator: | | |
| | | **GJ** | **Ives** |
| | Model | COR-65 | 469 |

2.13 SILENCERS

A. Ives, Glynn-Johnson.

B. At metal frame of each hinged door that does not have seals scheduled.

C. Three at single leaves and two at pairs.

2.14 TEMPLATES

A. Fabricate to template hardware applied to metal doors and frames.

B. Ensure that required templates are furnished to various manufacturers for fabrication purposes.

C. Templates: Make available not more than 10 days after receipt of approved Hardware Schedule.

2.15 EXIT AND FIRE DOORS

A. Exit Doors: Always openable from inside by simple turn of lever handle or push on panic bar without use of key or any special knowledge or effort, to include each leaf of door pairs.

B. Hardware for Fire Doors: Underwriters Laboratories Inc., Fire Protection Equipment List.

**PART 3 EXECUTION**

3.01 INSTALLATION

A. In accordance with manufacturer's written instructions.

B. Make Work neat and secure, develop full strength of components, and provide proper function.

C. Prevent marring, scratching, or otherwise damaging adjacent finishes during hardware installation.

D. Latchbolts:

1. Install to engage in strikes automatically, whether activated by closers or manually.
2. In no case shall additional manual pressure be required to engage latchbolt in strike.

E. Stops and Holders: Set to allow doors to open as far as possible.

F. Wall Mounted Hardware: Install over solid structural backing or solid blocking in hollow walls.

G. Thresholds:

1. Cope ends neatly to profile of jamb.
2. Set in sealant and seal ends to jambs.

H. Hardware: Adjust for easy, noise-free operation.

I. Replace damaged hardware items.

3.02 MOUNTING DIMENSIONS

A. Standard Door Hardware Locations: As recommended and published by Door and Hardware Institute, except as noted or detailed otherwise.

B. Door Silencers: Install 3 inches from top and bottom of jamb and 1 inch above strike at single doors, and 3 inches from edges of doors in head for pairs of doors.

C. Nameplates: Attach to doors or walls adjacent to doors 5 feet 6 inches above floor using self-sticking removable adhesive.

3.03 MANUFACTURER'S SERVICES

A. Deliver permanent lock cores to Site.

B. Remove temporary construction cores and insert permanent cores.

C. Inspect each lock set to ensure permanent cores are operating satisfactorily.

D. Deliver to Owner change and control keys for permanent system.

E. Return temporary construction cores to manufacturer.

F. Furnish manufacturer's representative for the following services at Site or classroom as designated by Owner, for minimum person-days listed below, travel time excluded:

1. 1 person-day for installation assistance, inspection, and Manufacturer's Certificate of Proper Installation.
2. 1 person-day for functional and performance testing.

3.04 PROTECTION

A. Cover and protect exposed surfaces of hardware during installation and until Completion of Startup.

B. Fit, dismantle, and reinstall finish hardware as required for finish painting work.

C. Protect and prevent staining of hardware during construction in accordance with manufacturer's recommendations.

D. Remove protective measures and permanent lock cylinders installed prior to final cleaning.

3.05 DOOR AND HARDWARE SCHEDULE

A. Door and Hardware Schedule in Section 08001, Door and Hardware Schedule, is guide to functional requirements of each opening.

B. Provide finish hardware as scheduled. Sizes omitted shall be as recommended by manufacturer.

**END OF SECTION**

# SECTION 08800
# GLAZING

## PART 1 GENERAL

### 1.01 REFERENCES

A. The following is a list of standards which may be referenced in this section:

1. American Architectural Manufacturers Association (AAMA):
   a. 800, Voluntary Specifications and Test Methods for Sealants.
   b. 804.1, Specification for Ductile Back-Bedding Glazing Tapes.
2. American National Standards Institute (ANSI): Z97.1, Safety Glazing Materials Used in Buildings—Safety Performance Specifications and Methods of Test.
3. ASTM International (ASTM):
   a. C920, Standard Specification for Elastomeric Joint Sealants.
   b. C1036, Standard Specification for Flat Glass.
   c. C1048, Standard Specification for Heat-Treated Flat Glass-Kind HS, Kind FT Coated and Uncoated Glass.
4. Code of Federal Regulations (CFR): 16 CFR 1201, Safety Standard for Architectural Glazing Materials.
5. Glass Association of North America (GANA):
   a. Glazing Manual.
   b. Sealant Manual.
6. Insulating Glass Manufacturer's Alliance (IGMA): Standards and Specifications, Number 65-7-2.
7. Underwriters Laboratories Inc. (UL).

### 1.02 SUBMITTALS

A. Action Submittals:

1. Shop Drawings:
   a. Complete schedule of glass and glazing material to be used for each purpose.
   b. Details of methods of glazing for each type of glazing condition.
   c. Catalog cuts of glazing materials with inclusion of glass edge cutting procedures.

B. Informational Submittals: Documentation of glazer's previous experience and manufacturer's approval.

## 1.03 QUALITY ASSURANCE

A. Glazier:

1. Have previous experience in installation of equal size and requirements that can be inspected by Engineer.
2. Have approval of glass and framing manufacturer(s).

B. Factory Label Glass: Nonlabeled glass will be rejected.

## 1.04 DELIVERY, STORAGE, AND HANDLING

A. Storage:

1. Support cases on both sides when stored vertically.
2. After unpacking, place interleaving protection between lites.
3. Keep glass and interleaving dry by storing inside where temperatures are above dewpoint, or if outside storage is necessary, cover the glass interleaving with opaque tarpaulins or plastic and inspect periodically. Wet interleaving can stain glass.
4. Avoid exposing stored glass to direct sunlight.

B. Handling:

1. Stack individual lites on edge and lean them against sturdy uprights at a slope of 5 to 7 degrees from vertical.
2. Cushion the bottom edges with soft, firm pads free of dirt, grit, glass chips, or other foreign material.
3. Do not rotate or cartwheel insulating glass units over their corners. Use a turning device such as a rolling block if units must be rotated.

## 1.05 SPECIAL GUARANTEE

A. Provide manufacturer's extended guarantee or warranty, with Owner named as beneficiary, in writing, as Special Guarantee. Special Guarantee shall provide for correction, or at the option of the Owner, removal and replacement of Work specified in this Specification section found defective during a period of 5 years after the date of Completion of Startup. Duties and obligations for correction or removal and replacement of defective Work shall be as specified in the General Clauses.

## PART 2 PRODUCTS

### 2.01 MANUFACTURERS

A. Products of the following manufacturers, that meet these Specifications, may be used on this Project:

1. ASG Industries, Inc.
2. Libbey-Owens-Ford Glass Co.
3. PPG Industries, Inc.
4. Guardian Industries, Corp.
5. Monsanto Co.
6. Panlam Industries.
7. Viracon, Inc.

### 2.02 GLAZING MATERIALS

A. Tempered Float Glass (T.G.): ASTM C1048, Kind FT, Condition A, Type I, Class 1, clear glass, Glazing Quality B; meeting ANSI Z97.1 and 16 CFR 1201, CI or CII, as applicable; 6-mm minimum thickness.

B. Insulating Glass (I.G.): Clear glass as manufactured by:

1. Thermopane X1 with Glasseal edge.
2. PPG, glass edge Twindow X1 units.

C. Wire Glass (W.G.): ASTM C1036, Type II, Class 1, Form 1, glazing quality, clear float, UL listed, meeting ANSI Z97.1, with 0.020-inch diameter welded wire in diamond mesh pattern embedded in 6-mm thickness.

### 2.03 ANCILLARY MATERIALS

A. Setting Blocks: Neoprene or EPDM, 70 Shore A durometer hardness, chemically compatible with sealant used.

B. Glazing Tape: Polyisobutylene, meeting AAMA 804.1, color as selected.

C. Glazing Channels: Resilient EPDM or vinyl gaskets as provided with aluminum frames to be glazed.

D. Glazing Sealant: One-component nonsag silicone elastomeric sealant ASTM C920, Type S, Grade NS, Class 25, Use G, or AAMA 800.

## PART 3 EXECUTION

### 3.01 PREPARATION

A. Do not perform glazing work in damp, foggy, or rainy weather, or when temperatures are not within range recommended by GANA "Glazing Manual."

B. Surfaces: Smooth, even, sound, dry, and clean.

C. Priming: Complete and cured.

D. Measure size of frames to receive glass and compute actual glass size allowing for edge clearances.

E. Use wire glass in all glazed openings in labeled fire doors and fire-rated walls.

### 3.02 INSTALLATION OF GLAZING

A. General: Follow recommendations of glass manufacturer and GANA "Sealant Manual" and the following:

1. Cutting:
   a. Make concealed edges clean, straight cut, and free from chips and fissures.
   b. Shop cut all glass. Nipping glass on job not allowed.
   c. Allow for maximum grip on all edges.
2. Positioning Glass:
   a. Set glass with equal bearing on entire width of pane.
   b. Position sheets of glass with setting blocks.
   c. Set tong marks of tempered glass at bottom of installed sheet.
   d. Orient pattern and draw of glass pieces in same direction.
   e. Place glass waves parallel to floor.
   f. Set smooth side to exterior.
3. Glazing: In accordance with GANA "Glazing Manual" and window or frame and glass manufacturers' printed instructions.
4. Glass shall not move or rattle.

### 3.03 HOSE TEST

A. Use 3/4-inch minimum hose without nozzle. With full stream, flood glazing from bottom to top.

B. Correct any leaks disclosed by hose test by reglazing and retesting until eliminated.

3.04 CLEANING

A. Leave glass and glazing in undamaged condition and ready for final cleaning.

B. Remove excess glazing compound from installed glass.

C. Remove labels from glass surface at time of final cleaning.

D. Wash and polish both faces of glass.

3.05 PROTECTION OF COMPLETED WORK

A. Protection:

1. Keep glass free from contamination by materials capable of staining glass.
2. Install tape across lights secured to frames or structure.
3. No tape or marking allowed on glass.

B. Replacements and Repairs: Prior to Completion of Startup, replace broken, defective, or scratched glass and repair damaged compounds.

**END OF SECTION**

# SECTION 09000
# FINISH SCHEDULES

## PART 1 GENERAL

1.01 SUBMITTALS

A. Submittal requirements are specified in appropriate product sections.

## PART 2 PRODUCTS

2.01 GENERAL

A. Products and materials referred to in this section are specified in appropriate product sections.

## PART 3 EXECUTION

3.01 INSTALLATION

A. Requirements for incorporation of scheduled products into the Work are specified in appropriate product sections.

3.02 SUPPLEMENTS

A. The supplements listed below, following "End of Section," are a part of this Specification.

1. Interior Finish Schedule: A tabulation of surface materials, finishes, and colors for each interior space numbered on the Drawings.
2. Exterior Finish Schedule: A tabulation of materials, finishes, and colors for each exterior space shown on the Drawings.
3. Color List.

**END OF SECTION**

# INTERIOR FINISH SCHEDULE

ABBREVIATIONS:

| | |
|---|---|
| AL | Aluminum |
| AS | As Selected |
| CLR | Clear |
| COL | Color |
| CONC | Concrete |
| CRC | Chemical-Resistant Coatings |
| CT | Ceramic Tile |
| EXP | Exposed Structure |
| EXST | Existing |
| FCTY | Factory |
| FNSH | Finish |
| FRPLP | Fiberglass Reinforced Plastic Liner Panels |
| FRPWP | Fiberglass Reinforced Plastic Wall Panel |
| GWB | Gypsum Board |
| GLZ | Glazing |
| HGT | Height |
| HDNR | Hardener |
| MATL | Material |
| MET | Metal |
| PLAM | Plastic Laminate |
| PLWD | Plywood |
| RESIL | Resilient |
| SLR | Clear Floor Sealer |
| VFBI | Vinyl Faced Batt Insulation |
| WD | Wood |
| WRB | Water Resistant GWB |

NOTES:

| | |
|---|---|
| No. 1 | Numbers in FNSH column refer to paint systems in Specification Section 09900. |
| No. 2 | Codes in COL column refer to color list in this section. |
| No. 3 | Finish closets and alcoves the same as the space into which they open. |
| No. 4 | Wall surfaces behind casework and other built-in items need not be painted or covered with wallcovering. |
| No. 5 | For exterior finishes and colors, see Specifications and elevation drawings. |
| No. 6 | For door and frame finishes, see Door and Hardware Schedule in Specification Section 08001. |
| No. 7 | Refer to Specification Section 03300 for schedule of concrete finishes. |
| No. 8 | For window and trim finishes, see schedule in Specification Section 08002. |
| No. 9 | Paint exposed metal framing associated with locker bench using Paint System No. 107 in color black. |

| Space | | Floor | | | Base & Wainscot | | | | | Typical Wall | | | Other Wall | | | | Ceiling | | | | Miscellaneous | | | | Other Req'ments |
|---|---|---|---|---|---|---|---|---|---|---|---|---|---|---|---|---|---|---|---|---|---|---|---|---|---|
| No. | Name | Sub Fl | Fnsh | Col | Hgt | Matl | Fnsh | Col | Walls | Matl | Fnsh | Col | Wall | Matl | Fnsh | Col | Hgt | Matl | Fnsh | Col | Item | Matl | Fnsh | Col | |
| TREATMENT BUILDING | | | | | | | | | | | | | | | | | | | | | | | | | |
| 101 | Process Mechanical Room | CONC | HDNR | CLR | 8'-0"/ 16'-0" | FRPLP/ FRPWP | FCTY | W-8/ W-1 | W,N, S/E | EXP/ VFB1 | 28/ FCTY | P-3 | E | EXST GWB | 116 | P-3 | Varies | EXST EXP | 28 | P-3 | New EXP | Met | 107 | P-3 | -- |
| 102 | Control Room | EXST CONC | 21 | P-2 | 4" | RESIL | FCTY | W-2 | ALL | GWB | 115 | P-3 | -- | -- | -- | -- | 10'-0" +/- | EXST GWB | 115 | P-4 | -- | -- | -- | -- | -- |
| 103 | Locker Room | EXST CONC | 21 | P-2 | 4" | RESIL | FCTY | W-2 | ALL | GWB | 115 | P-3 | -- | -- | -- | -- | 10'-0" +/- | EXST GWB | 115 | P-4 | Bench/ Trim | WD | 102 | P-3 | Note 9 |
| 104 | Corridor | EXST CONC | 21 | P-2 | 4" | RESIL | FCTY | W-2 | ALL | GWB | 115 | P-3 | -- | -- | -- | -- | 10'-0" +/- | EXST GWB | 115 | P-4 | -- | -- | -- | -- | -- |
| 105 | Restroom | EXST CONC | CT | F-1, F-2, F-3, F-4 | 5" | CT | FCTY | W-3 | N,E | GWB | 115 | P-3 | S,W | CT/ WRB | FCTY/ 115 | W-3, W-4, W-5, W-6/ P-3 | 10'-0" +/- | EXST GWB | 116 | P-4 | -- | -- | -- | -- | -- |
| 106 | Electrical Room | EXST CONC | SLR | CLR | 4" | RESIL | FCTY | W-2 | N,E, W | GWB | 115 | P-3 | S | EXP/ VFB1 | 107/ FCTY | P-3 | 10'-0" +/- | EXST GWB | 115 | P-4 | -- | -- | -- | -- | -- |

| Space | | Floor | | | Base & Wainscot | | | | | Typical Wall | | | Other Wall | | | | Ceiling | | | | Miscellaneous | | | | Other Req'ments |
|---|---|---|---|---|---|---|---|---|---|---|---|---|---|---|---|---|---|---|---|---|---|---|---|---|---|
| No. | Name | Sub Fl | Fnsh | Col | Hgt | Matl | Fnsh | Col | Walls | Matl | Fnsh | Col | Wall | Matl | Fnsh | Col | Hgt | Matl | Fnsh | Col | Item | Matl | Fnsh | Col | |
| 107 | Mechanical Room | EXST CONC | SLR | CLR | 4" | RESIL | FCTY | W-2 | N,W | GWB | 115 | P-3 | S,E | EXST/ VFBI | 107/ FCTY | P-3 | 10'-0" +/- | EXST GWB | 115 | P-4 | -- | -- | -- | -- | -- |
| 108 | Shower Room | EXST CONC | CT | F-1, F-2, F-3, F-4 | -- | -- | -- | -- | -- | CT/ WRB | FCTY /116 | W-3, W-4, W-5, W-6/ P-3 | -- | -- | -- | -- | 10'-0" +/- | GWB | 116 | P-4 | -- | -- | -- | -- | -- |

## EXTERIOR FINISH SCHEDULE

| Item/Material | Finish | Color |
|---|---|---|
| Metal Wall Panel | FCTY | Colony Green to Match Existing |
| Metal Roof Panel | FCTY | Misty Gray to Match Existing |
| Guard Posts | PS-5 | OSHA Safety Yellow |
| Metal Trim | FCTY | White to Match Existing |
| | | |

## COLOR LIST

NOTES:

No. 1 Color selections for this Project may be noted in Door and Hardware Schedule, Window and Relight Schedule, Interior Finish Schedule, Exterior Finish Schedule, Louver Schedule, and on the Drawings, by the Letter-Number combination in the Mark column of this list.

No. 2 Some color selections may be made in various specification sections.

No. 3 Use only the colors noted or scheduled. If a color selection is not made, request one from Engineer.

| Mark | Item | Manufacturer | Color | Other Requirements |
|---|---|---|---|---|
| F | FLOORS | | | |
| F-1 | Ceramic Tile | Daltile | DK-156 Brownstone Range | |
| F-2 | Ceramic Tile | Daltile | DK-325(1) Marble | |
| F-3 | Ceramic Tile | Daltile | DK-35 Almond | |
| F-4 | Ceramic Tile | Daltile | DK-12(3) Dark Green | |
| F-5 | Grout | Polyblend | #43 Slate | |
| | | | | |
| W | WALLS | | | |
| W-1 | FRP Wall Panels | Kemlite Co., Inc. | Pearl-Gray (48) | |
| W-2 | Resilient Base | Johnsonite | CB-28 Medium Gray | |
| W-3 | Ceramic Tile | Daltile | DK-156 Brownstone Range | |
| W-4 | Ceramic Tile | Daltile | DK-35 Almond | |
| W-5 | Ceramic Tile | Daltile | DK-12(3) Dark Green | |
| W-6 | Ceramic Tile | Daltile | DK-325(1) Marble | |
| W-7 | Grout | Polyblend | #43 Slate | |
| W-8 | FRP Liner Panels | Sunward Corp. | Gray, as selected from Manufacturer's standard range of colors | |
| | | | | |
| O | OPENINGS | | | |
| O-1 | Louvers | Construction Specialties | Bone White No. 21 | |
| O-2 | Window Frames | Kawneer | Bone White | |

| Mark | Item | Manufacturer | Color | Other Requirements |
|---|---|---|---|---|
| | | | | |
| P | PAINTING | | | |
| P-1 | Door and Frames | Sherwin-Williams | Match Existing Doors | |
| P-2 | Floor Paint | Sherwin-Williams | Magnetic Gray SW 7058 | |
| P-3 | Wall Paint | Sherwin-Williams | Silver Strand SW7057 | |
| P-4 | Ceiling Paint | Sherwin-Williams | Reserved White SW 7056 | |
| | | | | |
| F | FURNISHINGS | | | |
| N-1 | Plastic Laminate Sills | Wilsonart | 4640 Dove Moraine | |
| | | | | |
| A | ACCESSORIES & EQUIPMENT | | | |
| A-1 | Lockers | Comtec Industries | Gray L-00 | |
| A-2 | Shower Bench | Comtec Industries | S214 Charcoal Grey | Black Legs and Base Legs |
| | | | | |

# SECTION 09250
# GYPSUM BOARD

## PART 1 GENERAL

### 1.01 REFERENCES

A. The following is a list of standards which may be referenced in this section:

1. ASTM International (ASTM):
   a. C36, Standard Specification for Gypsum Wallboard.
   b. C473, Standard Test Methods for Physical Testing of Gypsum Board Products and Gypsum Lath.
   c. C475, Standard Specification for Joint Compound and Joint Tape for Finishing Gypsum Board.
   d. C630, Standard Specification for Water-Resistant Gypsum Backing Board.
   e. C645, Standard Specification for Non-Load (Axial) Bearing Steel Studs, Runners (Track), and Rigid Furring Channels for Screw Application of Gypsum Board.
   f. C665, Standard Specification for Mineral-Fiber Blanket Thermal Insulation for Light Frame Construction and Manufactured Housing.
   g. C754, Standard Specification for Installation of Steel Framing Members to Receive Screw-Attached Gypsum.
   h. C840, Standard Specification for Application and Finishing of Gypsum Board.
   i. C947, Standard Test Method for Flexural Properties of Thin-Section Glass-Fiber-Reinforced Concrete (Using Simple Beam with Third-Point Loading).
   j. C948, Dry and Wet Bulk Density, Water Absorption, and Apparent Porosity of Thin Sections of Glass-Fiber Reinforced Concrete, Test Method for.
   k. C1002, Standard Specification for Steel Drill Screws for the Application of Gypsum Board or Metal Plaster Bases.
2. Gypsum Association (GA):
   a. 214, Levels of Gypsum Board Finishes.
   b. 216, Recommended Specifications for Application and Finishing of Gypsum Board.

## 1.02 SUBMITTALS

A. Action Submittals: Manufacturer's list of items and materials proposed for use, with descriptive literature for each system used.

## 1.03 QUALITY ASSURANCE

A. General: Regardless of the minimum specifications herein, utilize materials and applications recommended by the manufacturer.

B. Applicator's Qualifications: Use only workers regularly employed in this type of work who can show experience in the application of similar materials and the specific systems specified.

## 1.04 DELIVERY, STORAGE, AND HANDLING

A. Delivery: Deliver fire-rated materials bearing testing agency label and required fire classification numbers.

B. Storage:

1. Store materials inside, under cover, stacked flat, off floor.
2. Stack gypsum board so that long lengths are not over short lengths.
3. Avoid overloading floor system of storage area.
4. Store adhesives and finishing compounds in dry areas; protect against freezing at all times.

## 1.05 ENVIRONMENTAL CONDITIONS

A. Temperature: In areas receiving gypsum board installation, maintain temperature range between 55 and 70 degrees F for 24 hours before, during, and after gypsum board and joint treatment application.

B. Ventilation:

1. Provide ventilation during and following adhesives and joint treatment applications.
2. Use temporary air circulators in enclosed areas lacking natural ventilation.
3. Under slow drying conditions, allow additional drying time between coats of joint treatment.
4. Protect installed materials from drafts of ambient air during hot, dry weather.

## PART 2 PRODUCTS

### 2.01 GYPSUM BOARD

A. Regular Board (GWB): ASTM C36, Type X, 5/8 inch thick with tapered edges, unless noted otherwise on Drawings.

B. Water-Resistant Board (WRB): ASTM C630, Type X, 5/8 inch thick with tapered edges.

### 2.02 FASTENERS FOR GYPSUM BOARD

A. Screws: ASTM C1002, self-drilling, self-tapping, bugle head, for use with power-driven tool.

1. Type S, 1 inch long for gypsum board to sheet metal.
2. Type W, 1-1/4 inches long for gypsum board to wood.

### 2.03 JOINT TREATMENT MATERIALS

A. Joint Tape for General Interior Applications: ASTM C475, perforated tape.

B. Joint Compound for General Interior Applications: ASTM C475, all-purpose, ready-mixed compound.

C. Joint Compound for Water-Resistant Board: Chemically curing, polyindurate type material as recommended by the manufacturer.

### 2.04 ANCILLARY MATERIALS

A. Adhesives: As recommended by gypsum board manufacturer for intended use.

B. Sound Attenuation Blankets: ASTM C665, Type I (no facing), 3 inches thick.

C. Acoustical Sealant: Nonsetting and nonstaining as manufactured by DAP, United States Gypsum, Tremco, or Ohio Sealants, Inc.

### 2.05 METAL ACCESSORIES

A. ASTM C1047, Zinc-Coated Metal.

1. Corner Bead: 1-1/4 inch by 1-1/4 inch:
   a. United States Gypsum; Dur-A-Bead.
   b. Gold Bond; standard corner beads.
2. Edge Trim:
   a. United States Gypsum; 200B metal trim.

b. Gold Bond; No. 200 casing bead.

3. Metal Control Joint:
   a. United States Gypsum; No. 093.
   b. Gold Bond; E-Z strip control joint.

2.06 LIGHT-GAUGE METAL FRAMING

A. Furring Channels: Roll-formed hat shaped section of 25-gauge galvanized steel with a face width of 1-3/8 inches and a depth of 7/8 inch.

2.07 NONSTRUCTURAL METAL FRAMING MEMBERS

A. ASTM C645, 25-gauge and 20-gauge galvanized I and C-studs with 1-5/8-inch flanges, and ancillary items for interior wall framing, shaft walls, and ceiling framing.

B. Dry wall studs, tracks, Z-furring channels, and accessories as manufactured by:

1. United States Gypsum.
2. Dale/Incor.
3. Gold Bond.

2.08 CEMENTITIOUS BACKER BOARD (CBB)

A. Tile Backer Panel: 1/2-inch nominal, aggregated portland cement panel reinforced with vinyl-coated, woven fiberglass mesh embedded in both surfaces, with the following minimum characteristics:

1. Flexural Strength: 750 psi, ASTM C947.
2. Water Absorption by Weight: 20, ASTM C948.
3. Nail Pull Resistance: 90 lb, ASTM C473.

B. Fasteners:

1. Screws: 1-1/4 inch, Type S, Hi-Lo for wood or 22- to 25-gauge steel framing. 1-1/4 inch, Type S-12, for 14- to 20-gauge steel framing. 1-15/16 inch, Type S-12, Pilot Point for steel joists.

C. Joint Reinforcement: 2 inches wide, glass fiber, open weave tape, as recommended by manufacturer.

D. Joint Compound: Chemically curing, polyindurate type material, as recommended by manufacturer.

E. Manufacturers and Products:

1. Modulators, Inc.; Gold Bond Wonder-Board or Glas-Crete.
2. Georgia-Pacific; Dens-Shield.
3. United States Gypsum; Durock.

## PART 3 EXECUTION

### 3.01 EXAMINATION

A. Inspect surfaces to receive gypsum board and related materials before beginning work and report to Engineer any defects in such work which will adversely affect the quality of work specified herein.

### 3.02 PREPARATION

A. General: Provide, install, and maintain necessary scaffold, staging, trestles, planking, and temporary heating, lighting, and ventilation as necessary for the duration of the gypsum board work.

B. Protection: Protect work of other trades.

C. Coordination:

1. Coordinate work with that of other trades. Check specifications and drawings of other trades to determine parts of work requiring coordination.
2. Cut and repair gypsum board systems for installation of omitted work.

D. Surface Preparation: Repair defective surfaces prior to starting work. Prepare as specified for application of specific materials.

### 3.03 ERECTION OF LIGHT-GAUGE NONSTRUCTURAL METAL FRAMING

A. Layout: Align partitions as shown on the Drawings.

B. Tracks:

1. Attach metal runner tracks to floor slabs with suitable fasteners located 2 inches from each end and spaced not more than 24 inches OC.
2. Where partitions terminate at suspended or framed ceilings attach top tracks to suspended ceiling with toggle or molly bolts spaced 24 inches OC.
3. Where partitions terminate at underside of metal decking attach deflection channels to substrate with suitable fasteners located 2 inches

from each end and spaced not more than 24 inches OC. Locate partition top tracks within deflection channels with a minimum top clearance of 1 inch. Do not attach track to channel.

C. Studs:

1. ASTM C754.
2. Following manufacturer's printed instructions, position studs vertically, engaging floor and ceiling tracks and spaced as noted on Drawings.
3. Splice: When necessary, use 8-inch nested lap and one positive attachment per stud flange.
4. Place in direct contact with doorframe jambs, abutting partitions, and partition corners. Provide for anchorage of doorframes to studs.
5. Anchor all studs for shelf-walls and those adjacent to window and doorframes, partition intersections, and corners to ceiling and floor runner flanges. Securely anchor studs to jamb and head anchor clips of door or borrowed-light frames by bolt or screw attachment.
6. Over metal door and borrowed-light frames, place horizontally a cut-to-length section of runner, with a web-flanged bend at each end, and secure with one positive attachment per flange. Position a cut-to-length stud (extending to ceiling runner) at vertical panel joints over doorframe header.
7. Locate studs at abutting construction, partition intersections, and partition corners.
8. Spacing: At 16 inches OC, unless otherwise required by manufacturer or shown on Drawings.
9. At Doorframes and Cased Openings:
   a. Full height double studs, No. 20 gauge minimum, secured to jamb anchors by bolts, screws, or welds.
   b. Header Track: Secure to frame head anchors and double studs.
   c. Provide double channel stiffeners through studs above frame and extend at least one stud space beyond each jamb.
10. Windows: Similar framing to door openings with stiffeners both above and below.
11. Wall Mounting Accessories: Provide channels, horizontal studding, No. 16 gauge sheet 8 inches by 2 inches greater than stud spacing, or other members within walls as required to provide secure and adequate support.

D. Furring:

1. Space furring channels the same as studs or as shown.
2. Around columns and beams construct furring as shown using metal studs and furring channels securely tied together and anchored in-place.

## 3.04 APPLICATION OF GYPSUM BOARD

A. Inspection and Preparation:

1. Check framing for accurate spacing and alignment.
2. Verify that spacing of installed framing does not exceed maximum allowable for thickness of gypsum board to be used.
3. Verify that frames are set for thickness of gypsum board to be used.
4. Do not proceed with installation of gypsum board until deficiencies are corrected and surfaces to receive gypsum board are acceptable.
5. Protrusions of framing, twisted framing members, or unaligned members must be repaired before installation of gypsum board is started.

B. General:

1. Meet requirements of ASTM C840 and GA-216.
2. Joints: Use gypsum board of maximum lengths to minimize end joints. Stagger end joints when they occur. Locate end joints as far as possible from center of wall or ceiling. Abut gypsum board without forcing. Neatly fit ends and edges of gypsum board. Do not place butt ends against tapered edges.
3. Support ends and edges of gypsum board panels on framing or furring members except for face layer of double layer and where ends are back blocked and floated.
4. Use metal edge trim where gypsum board abuts another material and where shown or noted on Drawings.
5. Use cementitious backer board in toilet and shower room walls behind ceramic tile and elsewhere as indicated on Drawings.
6. Follow manufacturer's recommendation of good practice.

C. Over Framing:

1. Apply gypsum board first to ceiling and then to walls for single layer horizontal application.
2. Use vertical application for fire-rated walls.
3. Fasten gypsum board securely to framing using double nailing, screw, or adhesive method.

D. Sound Attenuation Blankets:

1. Install sound attenuation blankets as detailed.
2. Seal with acoustical sealant perimeter edges of gypsum board, joints around penetrations, and other joints as noted.

3.05 JOINT SYSTEM

A. Interior Gypsum Board: Conform to ASTM C840.

B. Required: On exposed gypsum board, under ceramic tile and wall covering, and behind casework.

C. Prefill: Fill V-grooves formed by abutting rounded edges of gypsum board with prefill joint compound. Fill V-joint flush and remove excess compound beyond groove. Leave clear depression to receive tape. Permit prefill joint compound to harden prior to application of tape.

D. Taping and Finishing Joints:

1. Taping or Embedding Coat: Apply compound in thin, uniform layer to joints and angles to be reinforced. Apply reinforcing tape immediately. Center tape over joint and seat tape into compound. Leave approximately 1/64-inch to 1/32-inch compound under tape to provide bond. Apply skim coat immediately following tape embedment but not to function as fill or second coat. Fold tape and embed in angles to provide true angle. Dry embedding coat prior to application of fill coat.
2. Filling Coat: Apply joint compound over embedding coat. Fill taper flush with surface. Apply fill coat to cover tape. Feather out fill coat beyond tape and previous joint compound line. For joints with no taper, feather out at least 4 inches on either side of tape. Do not apply fill coat on interior angles. Allow fill coat to dry prior to application of finish coat.
3. Finishing Coat: Spread joint compound evenly over and beyond fill coat on joints. Feather to smooth uniform finish. Apply finish coat to taped angles to cover tape and taping compound. Sand final application of compound to provide surface ready for decoration.
4. Filling and Finishing Depressions: Apply joint compound as first coat to fastener depressions. Apply at least two additional coats of compound after first coat is dry. Leave filled and finished depressions level with plane of surface.

E. Finishing Beads and Trim:

1. First Fill Coat: Apply joint compound to bead and trim. Feather out from ground to plane of the surface. Dry compound prior to application of second fill coat.
2. Second Fill Coat: Apply joint compound in same manner as first fill coat. Extend beyond first coat onto face of gypsum board. Dry compound prior to application of finish coat.

3. Finish Coat: Apply joint compound to bead and trim. Extend beyond second fill coat. Feather finish coat from ground to plane of surface. Sand finish coat to provide flat surface ready for decoration.

## 3.06 FINAL FINISHES

A. Levels of Finish: Conform to GA-214.

B. Level 1:

1. Taping or embedding coat only.
2. Use in concealed areas, and where indicated, unless a higher level is required for fire-resistive or sound-rated assemblies.

C. Level 2:

1. Taping, filling, and finishing coats.
2. Use on water resistant gypsum backing board.

D. Level 3:

1. Taping, filling, and finishing coats.
2. Use on surfaces indicated to have ceramic tile.

E. Level 4:

1. Taping, filling, and finishing coats plus two separate coats applied over joints, angles, fastener heads, and trim accessories.
2. Sand between coats and after last coat.
3. Use on surfaces indicated to receive wall coverings.

F. Level 5:

1. Same as Level 4, plus a thin, smooth, uniform skim coat of joint compound, or product specially formulated for this purpose, over entire surface.
2. Produce surfaces free of tool marks and ridges, ready for decoration.
3. Use on surfaces not indicated otherwise, those indicated to receive gloss, semi-gloss, and nontextured flat paints, and where indicated.

## 3.07 ADJUST AND CLEAN

A. Clean: Remove droppings or texture overspray from walls, windows, and floor, leaving room clean for following trades.

B. Nail Pop: Repair nail pop by driving new nail approximately 1-1/2 inches from nail pop and reseat nail. When face paper is punctured, drive new nail or screw approximately 1-1/2 inches from defective fastening and remove defective fastening. Fill damaged surface with compound.

C. Ridging:

1. Do not repair ridging until condition has fully developed, approximately 6 months after installation or one heating season.
   a. Sand ridges to reinforcing tape without cutting through tape.
   b. Fill concave areas on both sides of ridge with topping compound.
   c. After fill is dry, blend in topping compound over repaired area.
2. Fill cracks with compound and finish smooth and flush.

3.08 INSTALLATION OF CEMENTITIOUS BACKER BOARD

A. Follow manufacturer's printed instructions for erection, cutting, attachments, and joint treatment.

B. Verify that framing is installed at maximum 16 inches OC, and that necessary blocking to support all fixtures and accessories has been installed. Where backing plates or straps are used, space out from framing to ensure a smooth finish application. Do not proceed until defects are corrected and are acceptable.

C. Precut boards to required sizes and make necessary cutouts. Fasten with the appropriate fasteners. Space fasteners 6 inches OC, maximum, or as directed by manufacturer. Fit ends closely but not forced together. Maintain 1/4-inch spacing between edge of board and fixture. Apply 2-inch glass fiber tape over joints and corners embedded with tile setting mortar.

**END OF SECTION**

# SECTION 09300
# TILE

## PART 1 GENERAL

### 1.01 REFERENCES

A. The following is a list of standards which may be referenced in this Section:

1. American National Standards Institute (ANSI):
   a. A108.1A, Installation of Ceramic tile in the Wet-Set Method with Portland Cement Mortar.
   b. A108.10, Installation of Grout in Tilework.
   c. A118.1, Dry-Set Portland Cement Mortar.
   d. A118.4, Latex-Portland Cement Mortar.
   e. A118.6, Standard Ceramic Tile Grouts for Tile Installation.
   f. A137.1, Specifications for Ceramic Tile.
2. ASTM International (ASTM):
   a. A497, Standard Specification for Steel Welded Wire Fabric, Deformed, for Concrete Reinforcement.
   b. C144, Standard Specification for Aggregate for Masonry Mortar.
   c. C150, Standard Specification for Portland Cement.
   d. C206, Standard Specification for Finishing Hydrated Lime.
   e. C207, Standard Specification for Hydrated Lime for Masonry Purposes.
   f. C847, Standard Specification for Metal Lath.
   g. C920, Standard Specification for Elastomeric Joint Sealants.
3. Tile Council of North America (TCA):
   a. Handbook for Ceramic Tile Installation.
   b. Handbook for Limitations.

### 1.02 SUBMITTALS

A. Action Submittals:

1. Samples:
   a. Two for each color, pattern, and type of tile specified.
   b. Size: Approximately 12 inches square.
   c. Mark Samples clearly to indicate color or shade, location in which to be used, and manufacturer's name.

B. Informational Submittals:

1. Certification of Compliance: For tile, mortar, grouts, and adhesives.

2. Manufacturer's Instructions: For storage, mixing, application, cleanup, and use of proposed mortars, grouts, and adhesives.
3. Tile Manufacturer's Maintenance Guidelines: For Owner's use in maintaining ceramic tilework specified herein.

1.03 ENVIRONMENTAL REQUIREMENTS

A. Set and grout tile in portland cement mortar when ambient temperature is at least 50 degrees F and rising. Follow ANSI A108.1A.

B. Comply with minimum temperature recommendations of manufacturers for bonding and grouting materials other than portland cement mortar.

1.04 EXTRA MATERIALS

A. Tile: Furnish extra 2 percent of each tile used in clean, marked cartons for Owner's future use.

**PART 2 PRODUCTS**

2.01 MANUFACTURERS

A. Materials and products specified in this section shall be products of:

1. American Olean Tile Co.
2. Dallas Ceramic Co.
3. Summitville Tiles, Inc.
4. United States Ceramic Tile Co.

2.02 MATERIALS

A. Tile: Standard grade, ANSI A137.1.

B. Unglazed Ceramic Mosaic Floor and Wall Tile: ANSI A137.1, Section 5.1, porcelain type, smooth cushion edge, nominal face size 2 inches by 2 inches, as shown on Drawings.

C. Trim Shapes and Bases: Type, color, and finish to match floor wall tiles.

D. Portland Cement Mortar:

1. Portland Cement: ASTM C150, Type 1.
2. Sand: ASTM C144.
3. Hydrated Lime: ASTM C206 or ASTM C207, Type S.
4. Water: Clean and potable.

5. Mortar Bed Reinforcement: Either of the following:
   a. Welded Wire Fabric: ASTM A497, size 2-inch by 2-inch mesh, 16/16 wire.
   b. Expanded Metal Reinforcement: ASTM C847, galvanized with minimum weight of 1.8 pounds per square yard.

E. Dry-Set Mortar: ANSI A118.1, TCA Formula 759, gray.

F. Latex-Portland Cement Mortar: ANSI A118.4.

G. Latex-Portland Cement Grout: Portland cement grout with latex additive, commercial quality, ANSI A118.6.

2.03 ANCILLARY MATERIALS

A. Expansion Joints:

1. Sealant: Silicone rubber type, meeting ASTM C920, Type S, Grade P, Class 25, Use T, color to match grout, with Shore A hardness of minimum 25 for joints in horizontal surfaces and minimum 35 in traffic areas.
2. Backup Material: Flexible and compressible type, nonstaining and compatible with sealants used.

B. Edge Strips: Stainless steel, Alloy 316 flat bar, 1/8 inch by depth of tile and mortar.

C. Sealer: Hillyard Chemical Co., Cemseal II or Thompson's Water Seal 101 or American Formulating and Manufacturing (AFM) Enterprises, Inc.; Safecoat Grout Sealer

D. Shower Membrane: Meet requirements of local authority having jurisdiction or governing building code.

E. Wall Membrane: 4-mil polyethylene film.

F. Tile Cleaner: Neutral tile cleaner solution acceptable to tile manufacturer.

G. Construction Paper: Heavy-duty, nonstaining kraft paper.

**PART 3 EXECUTION**

3.01 PREPARATION

A. Examine surfaces to receive ceramic tile, setting beds, or accessories prior to tile installation.

B. Correct defects or adverse conditions affecting quality and execution of tile installation.

C. Tolerances for Surfaces to Receive Tile:

1. Portland Cement and Dry-Set Mortar Methods:
   a. Maximum Variation in Subfloor Surface: 1/4 inch in 10 feet.
   b. Maximum Variation in Vertical Surfaces: 1/4 inch in 8 feet.

D. Grounds, anchors, plugs, hangers, bucks, electrical and mechanical work, in or behind tile, to be installed prior to proceeding with tilework.

E. Protection: Protect adjoining work surfaces before tilework begins.

F. Make substrate firm, dry, clean, and free of oily or waxy films.

3.02 INSTALLATION

A. Prepare surfaces, fit, set, or bond tile, grout and clean tile in accordance with applicable requirements of ANSI Standards for setting method specified, except as otherwise noted.

B. Trim: Provide bases, caps, stops, returns, trimmers, and other shapes to finish installation.

C. Setting Wall Tile (Thin-Set Application):

1. On Gypsum Board Over Metal Studs: Meet TCA Method W243.
2. On Cementitious Backer Board Over Metal Studs: Meet TCA Method W244.
3. Use latex-portland cement grout.

D. Setting Floor Tile (Conventional Application):

1. On Shower Compartment Floor: Meet TCA Method B415.
2. On Concrete Subfloor: Meet TCA Method F112.
3. Use latex-portland cement grout.

E. Edge Strips:

1. At openings without thresholds and similar discontinuous edges of thin-set tile floors.
2. Where ceramic tile floors are adjacent to other flooring material at same level.
3. Where ceramic tile cove base is combined with other types of flooring.

## 3.03 CLEANING AND SEALING

A. Clean tile surfaces thoroughly on completion of grouting.

B. Remove grout haze, observing tile manufacturer's recommendations as to use of acid and chemical cleaners.

C. Rinse tilework thoroughly with clean water before and after using chemical cleaners.

D. Polish surface of glazed tilework with soft cloth.

E. After grout has cured for 10 days, clean and seal nonglazed tiles following sealer manufacturer's instructions and recommendations.

## 3.04 PROTECTION

A. From Construction Dirt:

1. Apply protective coat of neutral cleaner solution, 1 part cleaner to 1 part water, to clean completed tile walls and floors.
2. Cover tile floors with heavy-duty, nonstaining construction paper, masked in-place.
3. Just before Completion of Startup, remove paper and rinse protective coat of neutral cleaner from tile surfaces.

B. From Traffic:

1. Prohibit foot and wheel traffic from using newly tiled floors for at least 7 days.
2. Place large, flat boards in walkways and wheelways for 7 days where use of newly tiled floor with cement type grout is unavoidable.

**END OF SECTION**

# SECTION 09545
# FIBERGLASS REINFORCED PLASTIC (FRP) WALL SURFACES

## PART 1 GENERAL

### 1.01 REFERENCES

A. The following is a list of standards which may be referenced in this Section:

1. ASTM International (ASTM):
   a. E84, Standard Test Method for Surface Burning Characteristics of Building Materials.
   b. E488, Standard Test Methods for Strength of Anchors in Concrete and Masonry Elements.
   c. E1190, Standard Test Methods for Strength of Power-Actuated Fasteners Installed in Structural Members.

### 1.02 SUBMITTALS

A. Action Submittals:

1. Manufacturer's product data.
2. Samples: Samples for verification each type of exposed finish, prepared on samples of size below and of same thickness and material for final Work. Where finishes involve normal color and texture variations, include sample sets showing full range of variations expected.
   a. Two 12-inch square samples of wall panel.
   b. Two 12-inch long samples of each exposed molding.

B. Informational Submittals: Product test reports from an independent testing laboratory showing compliance with specified requirements for grid unit surface burning characteristics.

### 1.03 DELIVERY, STORAGE, AND HANDLING

A. Deliver FRP wall panels and components to Project Site in manufacturer's original unopened packages, fully identified with type, finish, performance data, and compliance labels.

## PART 2 PRODUCTS

### 2.01 MANUFACTURERS

A. Materials and products specified in this section shall be products of:

1. Kemlite Co., Inc.
2. Nudo Products, Inc.

### 2.02 FRP WALL PANELS

A. Fire Performance Characteristics: Furnish FRP wall panels with surface burning characteristics in accordance with ASTM E84.

1. Fire-Rated: Class A.
2. Flame Spread: 25 or less.
   a. Smoke Developed: 200 or less.

B. FRP Wall Panels: 48-inch by 96-inch by 0.090-inch thick, with textured surface; color as indicated on Interior Finish Schedule.

C. Moldings: Manufacturer's standard vinyl moldings for all panel joints, edges, and corners, in color to match panels.

D. Fasteners: Manufacturer's recommended corrosion-resistant fasteners to suit installation shown on Drawings.

E. Sealant: Manufacturer's recommended sealant for panel joints and edges, around fasteners, and at moldings.

## PART 3 EXECUTION

### 3.01 PREPARATION

A. Measure each wall area and establish layout of FRP wall panels to minimize joints. Lay out panels with all horizontal and vertical joints aligned.

### 3.02 FRP WALL PANEL INSTALLATION

A. Install in accordance with manufacturer's instructions and as shown on Drawings.

B. Apply moldings and seal all panel joints, fasteners, and edges for a watertight installation.

**END OF SECTION**

# SECTION 09653
# RESILIENT BASE

## PART 1 GENERAL

### 1.01 REFERENCES

A. The following is a list of standards which may be referenced in this section:

1. ASTM International (ASTM): F1861, Standard Specification for Resilient Wall Base.

### 1.02 SUBMITTALS

A. Action Submittals:

1. Samples: Two 2-1/2-inch wide strips of base material.

B. Informational Submittals:

1. Manufacturer's Literature and Certificate of Compliance.
2. Operation and Maintenance Data:
   a. As specified in Section 01430, Operation and Maintenance Data.
   b. List of recommended maintenance products, methods, and procedures.

### 1.03 DELIVERY, STORAGE, AND HANDLING

A. Unless otherwise directed by Engineer, store materials in original containers at not less than 70 degrees F for not less than 24 hours immediately before installation.

### 1.04 ENVIRONMENTAL REQUIREMENTS

A. Maintain temperature in space to receive flooring between 70 and 90 degrees F for not less than 24 hours before and 48 hours after installation.

B. Maintain minimum temperature of 55 degrees F after flooring is installed, except as specified above.

### 1.05 SEQUENCING AND SCHEDULING

A. Do not install floor coverings until concrete has cured for 60 days or until primer material in test patches cannot be scraped or peeled from the slab after drying 24 hours.

1.06 EXTRA MATERIALS

A. Furnish additional floor covering materials from same production run as installed material at the rate of 45 square feet for each 1,000 square feet.

## PART 2 PRODUCTS

2.01 MANUFACTURERS

A. Flooring products of the following manufacturers meeting these Specifications may be used on this Project:

1. Amtico Flooring Division, American Biltrite, Inc.
2. Armstrong World Industries, Inc.
3. Azrock Floor Products.
4. Burke Flooring Products.
5. Congoleum Corp.
6. Johnsonite, Division of Duramax, Inc.
7. Kentile Floors, Inc.
8. Mannington Commercial.
9. Mercer Plastics Co., Inc.
10. National Floor Products Co.
11. R. C. Musson Rubber Co.
12. Vinyl Plastics, Inc.

2.02 BASE MATERIALS

A. Rubber Base:

1. ASTM F1861, Type TP, Group 2.
2. 0.125-inch thick.
3. Coved style, 4 inches high.
4. Color: As indicated in Section 09000, Finish Schedules.

B. Adhesive: Type and brands of adhesive as recommended by manufacturer of covering material for conditions of installation.

## PART 3 EXECUTION

3.01 EXAMINATION

A. Correct defects before installation of resilient base.

## 3.02 PREPARATION

A. Remove dirt, oil, grease, or other foreign matter from surfaces to receive base covering materials.

## 3.03 INSTALLATION OF BASE

A. Remove defects in wall and floor that would prevent level and true installation of base material.

B. Install base around perimeter of room or space, where scheduled.

C. Unroll base material and cut into accurate lengths as desired or as required for minimum number of joints.

D. Match edges of seams or double cut adjoining lengths to give continuous appearance.

E. Install with tight butt joints with no joint widths greater than 1/64 inch.

F. Apply adhesive and firmly adhere to wall surfaces.

G. Press down so bottom cove edge follows floor profile.

H. Ensure top and bottom edges of base are in firm contact with walls and floors.

I. Form internal and external corners by using premolded corners. Other methods, acceptable to Engineer, may be used if premolded corners are not available.

J. Scribe base accurately to abutting materials.

## 3.04 CLEANING AND PROTECTION

A. Upon completion of the installation of base and adjacent work, and after materials have set, clean surfaces with a neutral cleaner as recommended by manufacturer.

B. Repair adjacent surfaces damaged by base installation.

C. Protect completed work from traffic and damage until Completion of Startup.

3.05 INSTALLATION SCHEDULE

A. Areas to receive resilient base are indicated in Section 09000, Finish Schedules.

**END OF SECTION**

# SECTION 09900
# PAINTING AND PROTECTIVE COATINGS

## PART 1 GENERAL

### 1.01 REFERENCES

A. The following is a list of standards which may be referenced in this section:

1. American National Standards Institute (ANSI): Standard Colors for Color Identification and Coding.
2. American Society of Mechanical Engineers (ASME): A13.1, Scheme for the Identification of Piping Systems.
3. NACE International (NACE): RP0188, Discontinuity (Holiday) Testing of New Protective Coatings on Conductive Substrates.
4. Occupational Safety and Health Act (OSHA).
5. The Society for Protective Coatings (SSPC):
   a. SP 1, Solvent Cleaning.
   b. SP 2, Hand Tool Cleaning.
   c. SP 3, Power Tool Cleaning.
   d. SP 5, Joint Surface Preparation Standard White Metal Blast Cleaning.
   e. SP 6, Joint Surface Preparation Standard Commercial Blast Cleaning.
   f. SP 7, Joint Surface Preparation Standard Brush-Off Blast Cleaning.
   g. SP 10, Joint Surface Preparation Standard Near-White Blast Cleaning.
   h. SP 11, Power Tool Cleaning to Bare Metal.
   i. SP 12, Surface Preparation and Cleaning of Steel and Other Hard Materials by High- and Ultrahigh-Pressure Water Jetting Prior to Recoating.
   j. SP 13, Surface Preparation of Concrete.
   k. PA 1, Shop, Field, and Maintenance Painting.
   l. PA 2, Measurement of Dry Coating Thickness with Magnetic Gages.
   m. PA 3, Guide to Safety in Paint Applications.

## 1.02 DEFINITIONS

A. Terms used in this section:

1. Coverage: Total minimum dry film thickness in mils or square feet per gallon.
2. FRP: Fiberglass Reinforced Plastic.
3. HCl: Hydrochloric Acid.
4. MDFT: Minimum Dry Film Thickness, mils.
5. MDFTPC: Minimum Dry Film Thickness Per Coat, mils.
6. Mil: Thousandth of an inch.
7. PSDS: Paint System Data Sheet.
8. PVC: Polyvinyl Chloride.
9. SFPG: Square Feet Per Gallon.
10. SFPGPC: Square Feet Per Gallon Per Coat.
11. SP: Surface Preparation.

## 1.03 SUBMITTALS

A. Action Submittals:

1. Shop Drawings:
   a. Data Sheets:
      1) For each paint system, furnish a Paint System Data Sheet (PSDS), the manufacturer's technical data sheets, and paint colors available (where applicable) for each product used in paint system. The PSDS form is appended to the end of this section.
      2) Technical and performance information that demonstrate compliance with Specification.
      3) Submit required information on a system-by-system basis.
      4) Furnish copies of paint system submittals to the coating applicator.
      5) Indiscriminate submittal of manufacturer's literature only is not acceptable.
   b. Detailed chemical and gradation analysis for each proposed abrasive material.
2. Samples:
   a. Proposed Abrasive Materials: Minimum 1-pound sample for each type.

b. Reference Panel:
   1) Surface Preparation:
      a) Prior to start of surface preparation, furnish a 4-inch by 4-inch steel panel for each grade of sandblast specified herein, prepared to specified requirements.
      b) Provide panel representative of the steel used; prevent deterioration of surface quality.
      c) Upon approval by Engineer, panel to be reference source for inspection.
   2) Paint:
      a) Unless otherwise specified, before painting work is started, prepare minimum 8- by 10-inch sample with type of paint and application specified on similar substrate to which paint is to be applied.
      b) Furnish additional samples as required until colors, finishes, and textures are approved.
      c) Approved samples to be the quality standard for final finishes.

B. Informational Submittals:

1. Applicator's Qualification: List of references substantiating experience.
2. Coating manufacturer's Certificate of Compliance, in accordance with Section 01640, Manufacturers' Services.
3. Factory Applied Coatings: Manufacturer's certification stating factory applied coating system meets or exceeds requirements specified.
4. If the manufacturer of finish coating differs from that of shop primer, provide finish coating manufacturer's written confirmation that materials are compatible.
5. Manufacturer's written instructions and special details for applying each type of paint.
6. Manufacturer's written verification that submitted material is suitable for the intended use.

## 1.04 QUALITY ASSURANCE

A. Applicator Qualifications: Minimum 5 years' experience in application of specified products.

B. Regulatory Requirements:

1. Meet federal, state, and local requirements limiting the emission of volatile organic compounds.

2. Perform surface preparation and painting in accordance with recommendations of the following:
   a. Paint manufacturer's instructions.
   b. SSPC PA 3, Guide to Safety in Paint Applications.
   c. Federal, state, and local agencies having jurisdiction.

C. Mockup:

1. Before proceeding with Work under this section, finish one complete space or item of each color scheme required showing selected colors, finish texture, materials, quality of work, and special details.
2. After Engineer approval, sample spaces or items shall serve as a standard for similar work throughout the Project.

1.05 DELIVERY, STORAGE, AND HANDLING

A. Shipping:

1. Where precoated items are to be shipped to the Site, protect coating from damage. Batten coated items to prevent abrasion.
2. Shop painted surfaces shall be protected during shipment and handling by suitable provisions including padding, blocking, and use of canvas or nylon slings.

B. Storage:

1. Store products in a protected area that is heated or cooled to maintain temperatures within the range recommended by paint manufacturer.
2. Primed surfaces shall not be exposed to weather for more than 2 months before being topcoated, or less time if recommended by coating manufacturer.

1.06 PROJECT CONDITIONS

A. Environmental Requirements:

1. Do not apply paint in temperatures or moisture conditions outside of manufacturer's recommended maximum or minimum allowable.
2. Do not perform final abrasive blast cleaning whenever relative humidity exceeds 85 percent, or whenever surface temperature is less than 5 degrees F above dew point of ambient air.

B. Status of Existing Coatings: The following information on existing coatings or substrate conditions is provided for information only, and is generally believed

to be accurate, but is not guaranteed. Perform tests as required to verify applicability of this information to the Work.

1. Existing Building – Structural Steel: All rust found on primary and secondary steel framing.

## PART 2 PRODUCTS

### 2.01 MANUFACTURERS

A. Nationally recognized manufacturers of paints and protective coatings who are regularly engaged in the production of such materials for essentially identical service conditions.

B. Minimum of 5 years' verifiable experience in manufacture of specified product.

### 2.02 ABRASIVE MATERIALS

A. Select abrasive type and size to produce surface profile that meets coating manufacturer's recommendations for specific primer and coating system to be applied.

### 2.03 PAINT MATERIALS

A. General:

1. Manufacturer's highest quality products suitable for intended service.
2. Compatibility: Only compatible materials from a single manufacturer shall be used in the Work. Particular attention shall be directed to compatibility of primers and finish coats.
3. Thinners, Cleaners, Driers, and Other Additives: As recommended by coating manufacturer.

B. Products:

| Product | Definition |
|---|---|
| Acrylic Latex | Single-component, finish as required |
| Alkyd (Semigloss) | Semigloss alkyd |
| Alkyd Enamel | Optimum quality, gloss or semigloss finish as required, medium long oil |
| Alkyd Wood Primer | Flat alkyd |

| Product | Definition |
|---|---|
| Bituminous Paint | Single-component, coal-tar pitch based |
| Block Filler | Primer-sealer designed for rough masonry surfaces, 100% acrylic emulsion |
| Coal-Tar Epoxy | Amine, polyamide, or phenolic epoxy type 70% volume solids minimum, suitable for immersion service |
| Direct-to-Metal Acrylic | High performance, high-build acrylic coating suitable for direct application to marginally prepared steel and existing oil-based paints. |
| Epoxy Nonskid (Aggregated) | Polyamide or amine converted epoxies aggregated; aggregate may be packaged separately |
| Epoxy Primer – Other | Epoxy primer, high-build, as recommended by coating manufacturer for specific galvanized metal, copper, or nonferrous metal alloy to be coated |
| High Build Epoxy | Polyamide or polyamidoamine epoxy, minimum 69% volume solids, capability of 4 to 8 MDFT per coat |
| Latex Primer Sealer | Waterborne vinyl acrylic primer/sealer for interior gypsum board and plaster. Capable of providing uniform seal and suitable for use with specified finish coats |
| Epoxy, High Solids | Polyamide or polyamidoamine epoxy, 80% volume solids, minimum, suitable for immersion service |
| Polyurethane Enamel | Two-component, aliphatic or acrylic based polyurethane; high gloss finish |
| Rust-Inhibitive Primer | Single-package steel primers with anticorrosive pigment loading |
| Water Base Epoxy | Two-component, polyamide epoxy emulsion, finish as required |
| Vinyl Ester | Vinyl ester resin with inert flake pigment, suitable for the intended exposure; Plasite 4310. |
| Chemical-Resistant Epoxy | 100 percent solids, high performance novalac epoxy; Carboline Semstone 145 SL. |

| Product | Definition |
|---|---|
| Organic Zinc Rich primer | Converted epoxy, epoxy/phenolic, or urethane type, minimum of 10 pounds metallic zinc per gallon. |

2.04 MIXING

A. Multiple-Component Coatings:

1. Prepare using each component as packaged by paint manufacturer.
2. No partial batches will be permitted.
3. Do not use multiple-component coatings that have been mixed beyond their pot life.
4. Furnish small quantity kits for touchup painting and for painting other small areas.
5. Mix only components specified and furnished by paint manufacturer.
6. Do not intermix additional components for reasons of color or otherwise, even within the same generic type of coating.

B. Colors: Formulate paints with colorants free of lead, lead compounds, or other materials that might be affected by presence of hydrogen sulfide or other gas likely to be present at Site.

2.05 SHOP FINISHES

A. Shop Blast Cleaning: Reference paragraph Shop Coating Requirements, this section.

B. Surface Preparation: Provide Engineer minimum 7 days' advance notice to start of shop surface preparation work and coating application work.

C. Shop Coating Requirements:

1. When required by equipment Specifications, such equipment shall be primed and finish coated in shop by manufacturer and touched up in field with identical material after installation.
2. Where manufacturer's standard coating is not suitable for intended service condition, Engineer may approve use of a tie-coat to be used between manufacturer's standard coating and specified field finish. In such cases, tie-coat shall be surface tolerant epoxy as recommended by manufacturer of specified field finish coat. Coordinate details of equipment manufacturer's standard coating with field coating manufacturer.

D. Pipe:

1. Ductile Iron Pipe:
   a. Use SSPC standards as a guide for desired prepared surface. Follow recommendations of pipe and coating manufacturers for means and methods to achieve SSPC-equivalent surface.
   b. The surface preparation and application of the primer shall be performed by pipe manufacturer.
   c. For high performance (epoxy) coatings, follow additional recommendations of pipe and coating manufacturers.
   d. Prior to blast cleaning, grind smooth surface imperfections, including, but not limited to delaminating metal or oxide layers.

## PART 3 EXECUTION

### 3.01 GENERAL

A. Provide Engineer minimum 7 days' advance notice to start of field surface preparation work and coating application work.

B. Perform the Work only in presence of Engineer, unless Engineer grants prior approval to perform the Work in Engineer's absence.

C. Schedule inspection with Engineer in advance for cleaned surfaces and all coats prior to succeeding coat.

### 3.02 EXAMINATION

A. Factory Finished Items:

1. Schedule inspection with Engineer before repairing damaged factory-finished items delivered to Site.
2. Repair abraded or otherwise damaged areas on factory-finished items as recommended by coating manufacturer. Carefully blend repaired areas into original finish. If required to match colors, provide full finish coat in field.

B. Surface Preparation Verification: Inspect and provide substrate surfaces prepared in accordance with these Specifications and printed directions and recommendations of paint manufacturer whose product is to be applied. The more stringent requirements shall apply.

## 3.03 PROTECTION OF ITEMS NOT TO BE PAINTED

A. Remove, mask, or otherwise protect hardware, lighting fixtures, switchplates, aluminum surfaces, machined surfaces, couplings, shafts, bearings, nameplates on machinery, and other surfaces not specified elsewhere to be painted.

B. Provide drop cloths to prevent paint materials from falling on or marring adjacent surfaces.

C. Protect working parts of mechanical and electrical equipment from damage during surface preparation and painting process.

D. Mask openings in motors to prevent paint and other materials from entering.

E. Protect all surfaces adjacent to, or downwind of Work area from overspray.

## 3.04 SURFACE PREPARATION

A. Field Abrasive Blasting:

1. Perform blasting for items and equipment where specified and as required to restore damaged surfaces previously shop or field blasted and primed or coated.
2. Refer to coating systems for degree of abrasive blasting required.
3. Where the specified degree of surface preparation differs from manufacturer's recommendations, the more stringent shall apply.

B. Metal Surface Preparation:

1. Where indicated, meet requirements of SSPC Specifications summarized below:
   a. SP1, Solvent Cleaning: Removal of all visible oil, grease, soil, drawing and cutting compounds, and other soluble contaminants by cleaning with solvent.
   b. SP2, Hand Tool Cleaning: Removal of loose rust, loose mill scale, loose paint, and other loose detrimental foreign matter, using nonpower hand tools.
   c. SP3, Power Tool Cleaning: Removal of loose rust, loose mill scale, loose paint, and other loose detrimental foreign matter, using power-assisted hand tools.
   d. SP5, White metal Blast Cleaning: Removal of all visible oil, grease, dust, dirt, mill scale, rust, coatings, oxides, corrosion products, and other foreign matter by blast cleaning.

e. SP6, Commercial Blast Cleaning: Removal of all visible oil, grease, dust, dirt, mill scale, rust, coatings, oxides, corrosion products, and other foreign matter, except for random staining limited to no more than 33 percent of each unit area of surface which may consist of light shadows, slight streaks, or minor discolorations caused by stains of rust, stains of mill scale, or stains of previously applied coatings.

f. SP7, Brush-Off Blast Cleaning: Removal of all visible rust, oil, grease, soil, dust, loose mill scale, loose rust, and loose coatings. Tightly adherent mill scale, rust, and coating may remain on surface.

g. SP10, Near-White Blast Cleaning: Removal of all visible oil, grease, dust, dirt, mill scale, rust, coatings, oxides, corrosion products, and other foreign matter, except for random staining limited to no more than 5 percent of each unit area of surface which may consist of light shadows, slight streaks, or minor discolorations caused by stains of rust, stains of mill scale, or stains of previously applied coatings.

h. SP11, Power Tool Cleaning to Bare Metal: Removal of all visible oil, grease, dirt, dust, mill scale, rust, paint, oxide, corrosion products, and other foreign matter using power-assisted hand tools capable of producing suitable surface profile. Slight residues of rust and paint may be left in lower portion of pits if original surface is pitted.

i. SP12, Surface Preparation and Cleaning of Steel and Other Hard Materials by High- and Ultrahigh-Pressure Water Jetting Prior to Recoating: Surface preparation using high- and ultrahigh-pressure water jetting to achieve specified surface cleanliness condition. Surface cleanliness conditions are defined in SSPC SP12 and are designated WJ-1 through WJ-4 for visual surface preparation definitions, and SC-1 through SC-3 for nonvisual surface preparation definitions.

2. The words "solvent cleaning", "hand tool cleaning", "wire brushing", and "blast cleaning", or similar words of equal intent in these Specifications or in paint manufacturer's specification refer to the applicable SSPC Specification.

3. Where OSHA or EPA regulations preclude standard abrasive blast cleaning, wet or vacu-blast methods may be required. Coating manufacturers' recommendations for wet blast additives and first coat application shall apply.

4. Ductile Iron Pipe Supplied with Asphaltic Varnish Finish: Remove asphaltic varnish finish prior to performing specified surface preparation.
5. Hand tool clean areas that cannot be cleaned by power tool cleaning.
6. Round or chamfer sharp edges and grind smooth burrs, jagged edges, and surface defects.
7. Welds and Adjacent Areas:
   a. Prepare such that there is:
      1) No undercutting or reverse ridges on weld bead.
      2) No weld spatter on or adjacent to weld or any area to be painted.
      3) No sharp peaks or ridges along weld bead.
   b. Grind embedded pieces of electrode or wire flush with adjacent surface of weld bead.
8. Preblast Cleaning Requirements:
   a. Remove oil, grease, welding fluxes, and other surface contaminants prior to blast cleaning.
   b. Cleaning Methods: Steam, open flame, hot water, or cold water with appropriate detergent additives followed with clean water rinsing.
   c. Clean small isolated areas as above or solvent clean with suitable solvent and clean cloth.
9. Blast Cleaning Requirements:
   a. Type of Equipment and Speed of Travel: Design to obtain specified degree of cleanliness. Minimum surface preparation is as specified herein and takes precedence over coating manufacturer's recommendations.
   b. Select type and size of abrasive to produce surface profile that meets coating manufacturer's recommendations for particular primer to be used.
   c. Use only dry blast cleaning methods.
   d. Do not reuse abrasive, except for designed recyclable systems.
   e. Meet applicable federal, state, and local air pollution and environmental control regulations for blast cleaning, confined space entry (if required), and disposition of spent aggregate and debris.
10. Post-Blast Cleaning and Other Cleaning Requirements:
    a. Clean surfaces of dust and residual particles from cleaning operations by dry (no oil or water vapor) air blast cleaning or other method prior to painting. Vacuum clean enclosed areas and other areas where dust settling is a problem and wipe with a tack cloth.

b. Paint surfaces the same day they are blasted. Reblast surfaces that have started to rust before they are painted.

C. Galvanized Metal, Copper, and Nonferrous Metal Alloy Surface Preparation:

1. Remove soil, cement spatter, and other surface dirt with appropriate hand or power tools.
2. Remove oil and grease by wiping or scrubbing surface with suitable solvent, rag, and brush. Use clean solvent and clean rag for final wiping to avoid contaminating surface.
3. Obtain and follow coating manufacturer's recommendations for additional preparation that may be required.

D. Concrete Surface Preparation:

1. Do not begin until 30 days after concrete has been placed.
2. Remove grease, oil, dirt, salts or other chemicals, loose materials, or other foreign matter by solvent, detergent, or other suitable cleaning methods.
3. Brush-off blast clean to remove loose concrete and laitance, and provide a tooth for binding. Upon approval by Engineer, surface may be cleaned by acid etching method. Approval is subject to producing desired profile equivalent to No. 80 grit flint sandpaper. Acid etching of vertical or overhead surfaces shall not be allowed.
4. Secure coating manufacturer's recommendations for additional preparation, if required, for excessive bug holes exposed after blasting.
5. Unless otherwise required for proper adhesion, ensure surfaces are dry prior to painting.

E. Plastic and FRP Surface Preparation:

1. Hand sand plastic surfaces to be coated with medium grit sandpaper to provide tooth for coating system.
2. Large areas may be power sanded or brush-off blasted, provided sufficient controls are employed so surface is roughened without removing excess material.

F. Masonry Surface Preparation:

1. Complete and cure masonry construction for 14 days or more before starting surface preparation work.
2. Remove oil, grease, dirt, salts or other chemicals, loose materials, or other foreign matter by solvent, detergent washing, or other suitable cleaning methods.

3. Clean masonry surfaces of mortar and grout spillage and other surface deposits using one of the following:
   a. Nonmetallic fiber brushes and commercial muriatic acid followed by rinsing with clean water.
   b. Brush-off blasting.
   c. Water blasting.
4. Do not damage masonry mortar joints or adjacent surfaces.
5. Leave surfaces clean and, unless otherwise required for proper adhesion, dry prior to painting.
6. Masonry Surfaces to be Painted: Uniform texture and free of surface imperfections that would impair intended finished appearance.
7. Masonry surfaces to be clear coated. Free of discolorations and uniform in texture after cleaning.

G. Wood Surface Preparation:

1. Replace damaged wood surfaces or repair in a manner acceptable to Engineer prior to start of surface preparation.
2. Solvent clean (mineral spirits) knots and other resinous areas and coat with shellac or other knot sealer, prior to painting. Remove pitch by scraping and wipe clean with mineral spirits or turpentine prior to applying knot sealer.
3. Round sharp edges by light sanding prior to priming.
4. Filler:
   a. Synthetic-based wood putty approved by paint manufacturer for paint system.
   b. For natural finishes, color of wood putty shall match color of finished wood.
   c. Fill holes, cracks, and other surface irregularities flush with surrounding surface and sand smooth.
   d. Apply putty before or after prime coat, depending on compatibility and putty manufacturer's recommendations.
   e. Use cellulose type putty for stained wood surfaces.
5. Ensure surfaces are clean and dry prior to painting.

H. Gypsum Board Surface Preparation: Typically, new gypsum board surfaces need no special preparation before painting.

1. Surface Finish: Dry, free of dust, dirt, powdery residue, grease, oil, or any other contaminants.

I. Existing Painted Surfaces to be Repainted Surface Preparation:

1. Detergent wash and freshwater rinse.
2. Clean loose, abraded, or damaged coatings to substrate by Hand or Power Tool, SP 2 or SP 3.
3. Feather surrounding intact coating.
4. Apply one spot coat of specified primer to bare areas, overlapping prepared existing coating.
5. Apply one full finish coat of specified primer to entire surface.
6. If an aged, plural-component material is to be topcoated, contact coating manufacturer for additional surface preparation requirements.
7. For ductile iron pipe with asphaltic varnish finish not specified to be abrasive blasted, apply coat of tar stop prior to application of cosmetic finish coat.
8. Application of Cosmetic Coat:
   a. It is assumed that existing coatings have oxidized sufficiently to prevent lifting or peeling when overcoated with paints specified.
   b. Check compatibility by application to a small area prior to starting painting.
   c. If lifting or other problems occur, request disposition from Engineer.
9. Perform blasting as required to restore damaged surfaces. Materials, equipment, procedures shall meet requirements of Steel Structures Painting Council.

## 3.05 SURFACE CLEANING

A. Brush-off Blast Cleaning:

1. Equipment, procedure, and degree of cleaning shall meet requirements of SSPC SP 7, Brush-off Blast Cleaning.
2. Abrasive: Either wet or dry blasting sand, grit, or nutshell.
3. Select various surface preparation parameters, such as size and hardness of abrasive, nozzle size, air pressure, and nozzle distance from surface such that surface is cleaned without pitting, chipping, or other damage.
4. Verify parameter selection by blast cleaning a trial area that will not be exposed to view.
5. Engineer will approve acceptable trial blast cleaned area and will use area as a representative sample of surface preparation.
6. Repair or replace surface damaged by blast cleaning.

B. Acid Etching:

1. After precleaning, spread the following solution by brush or plastic sprinkling can: 1 part commercial muriatic acid reduced by 2 parts water by volume. Adding acid to water in these proportions gives an approximate 10 percent solution of HCl.
2. Application:
   a. Application Rate: Approximately 2 gallons per 100 square feet.
   b. Work acid solution into surface by hard-bristled brushes or brooms until complete wetting and coverage is obtained.
   c. Acid will react vigorously for a few minutes, during which time brushing shall be continued.
   d. After bubbling subsides (10 minutes), hose down remaining slurry with high pressure clean water.
   e. Rinse immediately to avoid formation on the surface of salts that are difficult to remove.
   f. Thoroughly rinse to remove any residual acid surface condition that may impair adhesion.
3. Ensure surface is completely dry before application of coating.
4. Apply acid etching to obtain a "grit sandpaper" surface profile. If not, repeat treatment.

C. Solvent Cleaning:

1. Consists of removal of foreign matter such as oil, grease, soil, drawing and cutting compounds, and any other surface contaminants by using solvents, emulsions, cleaning compounds, steam cleaning, or similar materials and methods which involve a solvent or cleaning action.
2. Meets requirements of SSPC SP 1.

## 3.06 APPLICATION

A. General:

1. The intention of these Specifications is for existing and new, interior and exterior concrete, metal, and submerged metal surfaces to be painted, whether specifically mentioned or not, except as specified otherwise. Do not paint exterior concrete surfaces, unless specifically indicated.
2. Extent of Coating (Immersion): Coatings shall be applied to all internal vessel and pipe surfaces, nozzle bores, flange gasket sealing surfaces, carbon steel internals, and stainless steel internals, unless otherwise specified.

3. For coatings subject to immersion, obtain full cure for completed system. Consult coatings manufacturer's written instructions for these requirements. Do not immerse coating until completion of curing cycle.
4. Apply coatings in accordance with these Specifications and paint manufacturers' printed recommendations and special details. The more stringent requirements shall apply. Allow sufficient time between coats to assure thorough drying of previously applied paint.
5. Sand wood lightly between coats to achieve required finish.
6. Vacuum clean surfaces free of loose particles. Use tack cloth just prior to applying next coat.
7. Fusion Bonded Coatings Method Application: Electrostatic, fluidized bed, or flocking.
8. Coat units or surfaces to be bolted together or joined closely to structures or to one another prior to assembly or installation.
9. Water-Resistant Gypsum Board: Use only solvent type paints and coatings.
10. On pipelines, terminate coatings along pipe runs to 1 inch inside pipe penetrations.
11. Keep paint materials sealed when not in use.
12. Where more than one coat is applied within a given system, alternate colors to provide a visual reference showing required number of coats have been applied.

B. Galvanized Metal, Copper, and Nonferrous Metal Alloys:

1. Concealed galvanized, copper, and nonferrous metal alloy surfaces (behind building panels or walls) do not require painting, unless specifically indicated herein.
2. Prepare surface and apply primer in accordance with System No. 10 specification.
3. Apply intermediate and finish coats of the coating system appropriate for the exposure.

C. Porous Surfaces, Such As Concrete and Masonry:

1. Filler/Surfacer: Use coating manufacturer's recommended product to fill air holes, bug holes, and other surface voids or defects.
2. Prime Coat: May be thinned to provide maximum penetration and adhesion.
   a. Type and Amount of Thinning: Determined by paint manufacturer and dependent on surface density and type of coating.
3. Surface Specified to Receive Water Base Coating: Damp, but free of running water, just prior to application of coating.

D. Film Thickness and Coverage:

1. Number of Coats:
   a. Minimum required without regard to coating thickness.
   b. Additional coats may be required to obtain minimum required paint thickness, depending on method of application, differences in manufacturers' products, and atmospheric conditions.
2. Application Thickness:
   a. Do not exceed coating manufacturer's recommendations.
   b. Measure using a wet film thickness gauge to ensure proper coating thickness during application.
3. Film Thickness Measurements and Electrical Inspection of Coated Surfaces:
   a. Perform with properly calibrated instruments.
   b. Recoat and repair as necessary for compliance with Specification.
   c. All coats are subject to inspection by Engineer and coating manufacturer's representative.
4. Visually inspect concrete, masonry, nonferrous metal, plastic, and wood surfaces to ensure proper and complete coverage has been attained.
5. Give particular attention to edges, angles, flanges, and other similar areas, where insufficient film thicknesses are likely to be present, and ensure proper millage in these areas.
6. Apply additional coats as required to achieve complete hiding of underlying coats. Hiding shall be so complete that additional coats would not increase the hiding.

## 3.07 PROTECTIVE COATINGS SYSTEMS

A. System No. 3 Submerged Metal—Other:

| Surface Prep. | Paint Material | Min. Coats, Cover |
|---|---|---|
| SP10, Near-White Blast Cleaning | High Build Epoxy | 3 coats, 4 MDFTPC |

B. System No. 3A Submerged Metal—DAF (for Coated Carbon Steel Base Bid Option Only):

| Surface Prep. | Paint Material | Min. Coats, Cover |
|---|---|---|
| SP5, White Metal Blast Cleaning (see Note 5) | Vinyl Ester, Shop-Applied | 2 to 3 coats, 45 MDFT total |

| Surface Prep. | Paint Material | Min. Coats, Cover |
|---|---|---|
| 1. All coatings work shall be done in the shop.<br>2. All mechanical equipment shall be removed prior to surface preparation and painting.<br>3. The equipment manufacturer shall be consulted to verify that the coating thickness specified will not interfere with machined tolerances for reassembly of the DAF components.<br>4. Abrasive blast profile shall be angular with a minimum depth of 4 mils, in accordance with manufacturer's written instructions.<br>5. Perform 100 percent holiday detection of all interior coatings before and after reinstallation of DAF components. | | |

C. System No. 4 Exposed Metal—Highly Corrosive:

| Surface Prep. | Paint Material | Min. Coats, Cover |
|---|---|---|
| SP10, Near-White Blast Cleaning | Organic Zinc Rich Primer | 1 coat, 3 MDFT |
| | High Build Epoxy | 1 coat, 4 MDFT |
| | Polyurethane Enamel | 1 coat, 3 MDFT |

D. System No. 6 Exposed Metal—Atmospheric:

| Surface Prep. | Paint Material | Min. Coats, Cover |
|---|---|---|
| SP6, Commercial Blast Cleaning | Rust-Inhibitive Primer | 1 coat, 2 MDFT |
| | Alkyd Enamel | 2 coats, 4 MDFT |

E. System No. 8 Buried Metal—General:

| Surface Prep. | Paint Material | Min. Coats, Cover |
|---|---|---|
| SP10, Near-White Blast Cleaning | Coal-Tar Epoxy | 2 coats, 16 MDFT |
| | Tape Coat System | AWWA C214 with Double Outer Wrap |

1. For steel pipe and fittings, follow AWWA C209 and C214 with double outer wrap.

F. System No. 10 Galvanized Metal, Copper, and Nonferrous Metal Alloy Conditioning:

| Surface Prep. | Paint Material | Min. Coats, Cover |
|---|---|---|
| In accordance with Paragraph Galvanized Metal, Copper, and Nonferrous Metal Alloy Surface Preparation | Epoxy Primer—Other | As recommended by the coating manufacturer<br><br>Remaining coats as required for exposure |

G. System No. 17 Special Coating Concrete:

| Surface Prep. | Paint Material | Min. Coats, Cover |
|---|---|---|
| In accordance with Paragraph Concrete Surface Preparation, this section | Carboline Carboguard 1340 Primer, or approved equal | 1 coat, 1 to 2 mils |
| | Carboline Semstone 145 SL with manufacturer's recommended aggregate to refusal | 1 coat, 20 to 25 mils |
| | Carboline Semstone 145 SL, or approved equal | 1 coat, 10 to 12 mils (neat, smooth finish) |
| 1. Provide additional components as required to provide coating for vertical surfaces.<br>2. Install coating around corners and specials in accordance with manufacturer's published details.<br>3. Apply coatings before equipment is installed. | | |

H. System No. 21 Skid-Resistant—Concrete:

| Surface Prep. | Paint Material | Min. Coats, Cover |
|---|---|---|
| In accordance with Paragraph Concrete Surface Preparation, this section | Epoxy Nonskid (Aggregated) | 1 coat, 160 SFPG |

I. System No. 25 Exposed FRP, PVC:

| Surface Prep. | Paint Material | Min. Coats, Cover |
|---|---|---|
| In accordance with Paragraph Plastic and FRP Surface Preparation, this section | Acrylic Latex Semigloss | 2 coats, 320 SFPGPC |

J. System No. 27 Aluminum and Dissimilar Metal Insulation:

| Surface Prep. | Paint Material | Min. Coats, Cover |
|---|---|---|
| Solvent Clean (SP1) | Prime in accordance with manufacturer's recommendations | |
| | Bituminous Paint | 1 coat, 10 MDFT |

K. System No. 28 Repair of Existing Coatings:

| Surface Prep. | Paint Material | Min. Coats, Cover |
|---|---|---|
| Solvent Clean (SP-1) followed by Hand Tool (SP-2) or Power Tool (SP-3) Cleaning | Direct-to-Metal Acrylic | 2 coats, 6 MDFT |

## 3.08 ARCHITECTURAL PAINT SYSTEMS

A. System No. 102 Wood, Semigloss (Interior or Exterior):

| Surface Prep. | Paint Material | Min. Coats, Cover |
|---|---|---|
| In accordance with Paragraph Wood Surface Preparation, this section | Alkyd Wood Primer | 1 coat, 400 SFPG |
| | Alkyd (Semigloss) | 1 coat, 400 SFPG |

B. System No. 107 Metal Trim and Structural Steel:

| Surface Prep. | Paint Material | Min. Coats, Cover |
|---|---|---|
| SP6, Commercial Blast Cleaning | Rust-Inhibitive Primer | 1 coat, 2 MDFT |
| | Alkyd Enamel (Semigloss) | 2 coats, 4 MDFT |

C. System No. 113 Concrete, Semigloss:

| Surface Prep. | Paint Material | Min. Coats, Cover |
|---|---|---|
| In accordance with Article Concrete Surface Preparation, this section | Acrylic Latex (Semigloss) | 2 coats, 240 SFPGPC |

D. System No. 115 Gypsum Board, Semigloss:

| Surface Prep. | Paint Material | Min. Coats, Cover |
|---|---|---|
| In accordance with Paragraph Gypsum Board Surface Preparation, this section | Latex Primer/Sealer | 1 coat, 350 SFPG |
| | Acrylic Latex (Semigloss) or Alkyd (Semigloss) | 2 coats, 400 SFPGPC |

E. System No. 116 Gypsum Board, Gloss Epoxy:

| Surface Prep. | Paint Material | Min. Coats, Cover |
|---|---|---|
| In accordance with Paragraph Gypsum Board Surface Preparation, this section | Manufacturer's Recommended Primer | 1 coat, 350 SFPG |
| | Water Base Epoxy (Gloss) | 1 coat, 250 SFPG |

3.09 COLORS

A. Provide as shown in Section 09000, Finish Schedules.

B. Equipment Colors:

1. Equipment includes the machinery or vessel itself plus the structural supports and fasteners and attached electrical conduits.
2. Paint equipment No. 70 light gray as specified in ANSI 359-A.
3. Paint nonsubmerged portions of equipment the same color as the piping it serves, except as itemized below:
   a. Dangerous Parts of Equipment and Machinery: OSHA Orange.
   b. Fire Protection Equipment and Apparatus: OSHA Red.
   c. Radiation Hazards: OSHA Purple.
   d. Physical hazards in normal operating area and energy lockout devices, including, but not limited to, electrical disconnects for equipment and equipment isolation valves in air and liquid lines under pressure: OSHA Yellow.

C. Pipe Identification Painting:

1. Paint all nonsubmerged metal piping, including electrical conduit, No. 70 light gray as specified in ANSI 359-A. Paint fittings and valves the same color as pipe, except equipment isolation valves.
2. Pipe Supports: Painted No. 70 light gray, as specified in ANSI 359-A.

## 3.10 FIELD QUALITY CONTROL

A. Testing Equipment:

1. Provide magnetic type dry film thickness gauge to test coating thickness specified in mils, as manufactured by Nordson Corp., Anaheim, CA, Mikrotest.
2. Provide low-voltage wet sponge electrical holiday detector to test completed coating systems, 20 mils dry film thickness or less, except zinc primer, high-build elastomeric coatings, and galvanizing, for pinholes, holidays, and discontinuities, as manufactured by Tinker and Rasor, San Gabriel, CA, Model M-1.
3. Provide high-voltage spark tester to test completed coating systems in excess of 20 mils dry film thickness. Unit to be as recommended by coating manufacturer.

B. Testing:

1. Thickness and Continuity Testing:
   a. Measure coating thickness specified in mils with a magnetic type, dry film thickness gauge, in accordance with SSPC PA 2. Check each coat for correct millage. Do not make measurement before a minimum of 8 hours after application of coating.
   b. Holiday detect coatings 20 mils thick or less, except zinc primer and galvanizing, with low voltage wet sponge electrical holiday detector in accordance with NACE RP0188.
   c. Holiday detect coatings in excess of 20 mils dry with high voltage spark tester as recommended by coating manufacturer and in accordance with NACE RP0188.
   d. After repaired and recoated areas have dried sufficiently, retest each repaired area. Final tests may also be conducted by Engineer.

C. Inspection: Leave staging and lighting in place until Engineer has inspected surface or coating. Replace staging removed prior to approval by Engineer. Provide additional staging and lighting as requested by Engineer.

D. Unsatisfactory Application:

1. If item has an improper finish color or insufficient film thickness, clean surface and topcoat with specified paint material to obtain specified color and coverage. Obtain specific surface preparation information from coating manufacturer.

2. Evidence of runs, bridges, shiners, laps, or other imperfections is cause for rejection.
3. Repair defects in accordance with written recommendations of coating manufacturer.

E. Damaged Coatings, Pinholes, and Holidays:

1. Feather edges and repair in accordance with recommendations of paint manufacturer.
2. Hand or power sand visible areas of chipped, peeled, or abraded paint, and feather the edges. Follow with primer and finish coat. Depending on extent of repair and appearance, a finish sanding and topcoat may be required.
3. Apply finish coats, including touchup and damage-repair coats in a manner that will present a uniform texture and color-matched appearance.

## 3.11 MANUFACTURER'S SERVICES

A. In accordance with Section 01640, Manufacturers' Services, coating manufacturer's representative shall be present at Site as follows:

1. On first day of application of any coating system.
2. A minimum of two additional Site inspection visits, each for a minimum of 2 hours, in order to provide Manufacturer's Certificate of Proper Installation.
3. As required to resolve field problems attributable to or associated with manufacturer's product.
4. To verify full cure of coating prior to coated surfaces being placed into immersion service.

## 3.12 CLEANUP

A. Place cloths and waste that might constitute a fire hazard in closed metal containers or destroy at end of each day.

B. Upon completion of the Work, remove staging, scaffolding, and containers from Site or destroy in a legal manner.

C. Remove paint spots, oil, or stains upon adjacent surfaces and floors and leave entire job clean.

## 3.13 APPLICATION SCHEDULE

A. Surfaces Not Requiring Painting: Unless otherwise stated or shown below or in other sections, the following areas or items will not require painting or coating:

1. Concrete surfaces.
2. Reinforcing steel.
3. Nonferrous and corrosion-resistant ferrous alloys such as copper, bronze, Monel, aluminum, chromium plate, atmospherically exposed weathering steel, and stainless steel, except where:
   a. Required for electrical insulation between dissimilar metals.
   b. Aluminum and stainless steel are embedded in concrete or masonry, or aluminum is in contact with concrete or masonry.
   c. Color coding of equipment and piping is required.
4. Nonmetallic materials such as glass, wood, and porcelain, except as required for architectural painting or color coding.
5. Prefinished electrical and architectural items such as motor control centers, switchboards, switchgear, panelboards, transformers, disconnect switches (if prefinished in OSHA yellow), acoustical tile, cabinets, elevators, building louvers, and wall panels; color coding of equipment is required.
6. Nonsubmerged electrical conduits attached to unpainted concrete surfaces.
7. Cathodic protection anodes.
8. Items specified to be galvanized after fabrication, unless specified elsewhere or subject to immersion.
9. Insulated piping and insulated piping with jacket will require prime coat only, except as required for architectural painting or color coding.
10. Fiberglass reinforced plastic (FRP) surfaces with an integral ultra-violet resistant colored gel coat do not require painting, provided the color is as selected.

B. Unless otherwise shown or specified, paint surfaces in accordance with the following application schedule. In the event of discrepancies or omissions in the following, request clarification from Engineer before starting work in question.

C. System No. 3 Submerged Metal—Other: Use on the following items or areas:

1. Submersible pumps.

D. System No. 3A Submerged Metal—DAF Tank: Use on the following item:

1. Use for coated carbon steel DAF Base Bid option only.
2. All interior surfaces of carbon steel components including walls, floor, cover plates, baffles, pipe wall penetrations, and other miscellaneous ferrous metal components.

E. System No. 4 Exposed Metal—Highly Corrosive: Use on the following items or areas:

1. Exposed metal surfaces, new and located inside or outside of structures and exposed to weather not otherwise scheduled to receive System No. 6.
2. All mechanical equipment including ferrous metal pipes, valves, and other miscellaneous appurtenances.
3. All exterior exposed metal surfaces of DAF tank.
4. At existing Product Tank, coat bare metal edges of new holes drilled into existing channel flange of tank.

F. System No. 6 Exposed Metal—Atmospheric: Use on the following items or areas:

1. As indicated in Section 09000, Finish Schedules, and Section 08001, Door and Hardware Schedule.
2. Apply surface preparation and primer to surfaces prior to installation. Finish coats need only be applied to surfaces exposed after completion of construction.

G. System No. 8 Buried Metal—General: Use on the following items or areas:

1. Buried, belowgrade portions of steel items, except buried stainless steel or ductile iron, and the following specific surfaces:
   a. Buried copper pipe.

H. System No. 10 Galvanized Metal, Copper, and Nonferrous Metal Alloy Conditioning: Use on the following items or areas:

1. Galvanized surfaces requiring painting.
2. After application of System No. 10, apply finish coats as required for exposure.

I. System No. 17 Special Coating Concrete: Use this system on the following items or areas:

1. Concrete surfaces as shown on the Drawings.

J. System No. 21 Skid-Resistant—Concrete: Use as indicated in Section 09000, Finish Schedules.

K. System No. 25 Exposed FRP, PVC: Use on the following items or areas:

1. All exposed-to-view PVC and CPVC surfaces, and FRP surfaces without integral UV-resistant gel coat.

L. System No. 27 Aluminum and Dissimilar Metal Insulation: Use on aluminum surfaces embedded or in contact with concrete and where specified.

M. System No. 28 Repair of Existing Coatings: Use on the following items or areas:

1. Exposed surfaces of structural steel primary and secondary framing located in the Treatment Building.

N. System No. 102 Wood, Semigloss: Use as indicated in Section 09000, Finish Schedules.

O. System No. 107 Metal Trim and Structural Steel: Use as indicated in Section 09000, Finish Schedules.

P. System No. 113 Concrete, Semigloss: Use as indicated in Section 09000, Finish Schedules.

Q. System No. 115 Gypsum Board, Semigloss: Use as indicated in Section 09000, Finish Schedules.

R. System No. 116 Gypsum Board, Gloss Epoxy: Use as indicated in Section 09000, Finish Schedules.

3.14 SUPPLEMENT

A. The supplement listed below, following "End of Section," is a part of this Specification:

1. Paint System Data Sheet (PSDS).

**END OF SECTION**

## PAINT SYSTEM DATA SHEET

Complete and attach manufacturer's Technical Data Sheet to this PSDS for each coating system.

| | | |
|---|---|---|
| Paint System Number (from Spec.): | | |
| Paint System Title (from Spec.): | | |
| Coating Supplier: | | |
| Representative: | | |
| Surface Preparation: | | |
| **Paint Material (Generic)** | **Product Name/Number (Proprietary)** | **Min. Coats, Coverage** |
| | | |
| | | |
| | | |
| | | |
| | | |
| | | |
| | | |

Provide manufacturer's recommendations for the following parameters at temperature (F)/relative humidity:

| **Temperature/RH** | **50/50** | **70/30** | **90/25** |
|---|---|---|---|
| Induction Time | | | |
| Pot Life | | | |
| Shelf Life | | | |
| Drying Time | | | |
| Curing Time | | | |
| Min. Recoat Time | | | |
| Max. Recoat Time | | | |

Provide manufacturer's recommendations for the following:

Mixing Ratio: _____

Maximum Permissible Thinning: _____

Ambient Temperature Limitations: min.: _____ max.: _____

Surface Temperature Limitations: min.: _____ max.: _____

Surface Profile Requirements: min.: _____ max.: _____

Attach additional sheets detailing manufacturer's recommended storage requirements and holiday testing procedures.

# SECTION 10200
# LOUVERS

## PART 1 GENERAL

### 1.01 REFERENCES

A. The following is a list of standards which may be referenced in this section:

1. Air Movement and Control Association (AMCA): Standard 500.
2. ASTM International (ASTM):
   a. D1187, Standard Specification for Asphalt-Base Emulsions for Use as Protective Coatings for Metal.
   b. E90, Standard Test Method for Laboratory Measurement of Airborne Sound Transmission Loss of Building Partitions and Elements.

### 1.02 DESIGN REQUIREMENTS

A. Installed Louvers: Capable of resisting wind load of 30 pounds per square foot.

### 1.03 SUBMITTALS

A. Action Submittals:

1. Shop Drawings: Large scale details of louvers, anchorage, and relationship to adjoining construction.
   a. Manufacturer's Literature:
      1) Descriptive and performance data of louvers, including standard drawings and louver-free area.
      2) Parts list, if applicable.
      3) Installation instructions.
      4) Maintenance procedures.
2. Samples: Manufacturer's standard finishes and colors.

B. Informational Submittals:

1. Factory test data.
2. Certificates of AMCA ratings.
3. Special Guarantee.

1.04 SPECIAL GUARANTEE

A. Manufacturer's extended guarantee or warranty, with Owner named as beneficiary, in writing, as Special Guarantee. Special Guarantee shall provide for correction, or at option of Owner, removal and replacement of special fluorocarbon or baked-on finish found defective during a period of 2 years after date of Completion of Startup. Duties and obligations for correction or removal and replacement of defective Work as specified in General Clauses.

**PART 2 PRODUCTS**

2.01 GENERAL

A. Water Penetration Rate: No greater than 0.01 ounce per square foot.

B. Louvers: Rated and tested in accordance with AMCA Standard 500.

C. Furnish louvers with interior duct collars.

2.02 FIXED DRAINABLE LOUVER (TYPE DB)

A. Frame: Extruded aluminum channel, 0.081 inch thick, 4 inches deep, interior duct collar, concealed mullions.

B. Blades: Extruded aluminum, 0.081 inch minimum thickness, 35-to 45-degree pitch angles, with integral front drain gutter, spaced 3 to 4 inches on center.

C. Free Area: 50 percent.

D. Pressure Loss: AMCA certified rating of no greater than 0.10-inch WC at 700 fpm velocity through free area.

E. Sizes: As scheduled.

F. Screen: Inside mounted, painted aluminum, 1/2-inch mesh.

G. Finish:

1. Kynar 500 fluorocarbon coating.
2. Color as scheduled or selected.

H. Manufacturers and Products:

1. Construction Specialties; Model A4097.
2. Ruskin; Model ELF375DX.

## 2.03 ACOUSTICAL FIXED LOUVER (TYPE AC)

A. Frame: Extruded aluminum channel, 0.081 inch, 8 inches deep.

B. Blades: Extruded aluminum, 0.081 inch, acoustical baffles packed with moisture-proof mineral fiber.

C. Free Area: 23 percent.

D. Pressure Loss: AMCA certified rating of no greater than 0.05-inch WC at 700 fpm.

E. Acoustic Performance: Test in accordance with ASTM E90. Minimum acceptable performance through all octave bands: STC = 15.

| Frequency (Hz) | 63 | 125 | 250 | 500 | 1,000 | 2,000 | 4,000 | 8,000 |
|---|---|---|---|---|---|---|---|---|
| Transmission Loss | 9 | 7 | 7 | 11 | 18 | 19 | 14 | 13 |
| Noise Reduction | 15 | 13 | 13 | 17 | 24 | 25 | 20 | 19 |

F. Sizes: As scheduled.

G. Screen: Inside mounted, extruded aluminum frame, 1/2-inch mesh, PVC-coated.

H. Finish:

1. Kynar 500 fluorocarbon coating.
2. Color as scheduled or selected.

I. Manufacturers and Products:

1. Construction Specialties; Model A8370.
2. Ruskin; Model ACL 845.

## 2.04 ACCESSORIES

A. Anchors and Fasteners for Louvers: Stainless steel.

B. Flashings: Match louver frame.

C. Isolation Tape: Tremco 440, 3M EC1202, or Presstite 579.6.

D. Isolation Paint: ASTM D1187, bituminous coating.

E. Insulated Blank-Off Panels:

1. Panels: Urethane core faced on both sides with 0.032-inch stucco embossed 5005-H134 aluminum sheet in finish and color to match louvers.
2. Frames: 6063-T52 extruded aluminum sections 0.080-inch thick, with mitered corners.
3. Perimeter Gaskets: Closed-cell PVC, to ensure tight fit of panel to louver.
4. Thickness: 2 inches.
5. U-Value: 0.10.

2.05 SOURCE QUALITY CONTROL

A. Factory Performance Tests:

1. Airflow versus pressure loss.
2. Rain penetration data.
3. Acoustic performance of acoustic louvers.

**PART 3 EXECUTION**

3.01 EXAMINATION

A. Check openings to assure that dimensions conform to Drawings.

B. Assure that openings are free of irregularities that would interfere with installation.

C. Do not install louvers until defects have been corrected.

3.02 INSTALLATION

A. Install louvers as shown on reviewed Shop Drawings. Coordinate with heating or ventilation ductwork to be connected.

B. Follow procedures in manufacturer's recommended installation instructions.

C. Install insulated blank-off panels where indicated, completely closing space between ducts and louver frames.

D. Separate aluminum from other metals with isolation tape or paint.

3.03 ADJUSTING AND CLEANING

A. Set adjustable louver blades for uniform alignment in OPEN and CLOSED positions.

B. Adjust louvers so moving parts operate smoothly.

3.04 SUPPLEMENT

A. The supplement listed below, following "End of Section," is a part of this Specification.

1. Louver Schedule: A tabulation of louver characteristics for each opening numbered on Drawings. Provide items as scheduled.

**END OF SECTION**

# LOUVER SCHEDULE

LOUVER TYPES:

| | |
|---|---|
| AC | Acoustical |
| AJ | Adjustable |
| BV | Block Vent |
| DB | Drainable |
| FX | Fixed |
| LD | Combination Louver/Damper |
| MO | Manually Operable |
| SP | Stormproof |
| TR | Transom |

ABBREVIATIONS:

| | |
|---|---|
| AL | Aluminum |
| AS | As Selected |
| FCTY | Factory |
| FRP | Fiber Reinforced Plastic |
| GALV | Galvanized Steel |

NOTES:

| | |
|---|---|
| No. 1 | For details see Design Details. |
| No. 2 | Numbers in "Fnsh" column refer to paint systems in Specification Section 09900. |
| No. 3 | Codes in "Col" column refer to color list in Specification Section 09000. |
| No. 4 | Existing opening, field verify size. |

| Opening | | | Louver | | | | Details | | | |
|---|---|---|---|---|---|---|---|---|---|---|
| No. | Width | Height | Type | Matl | Fnsh | Col | Head | Jamb | Sill | Other Requirements |
| L-1 | 48 | 48 | AC | AL | FCTY | O-1 | 10207 | 10207/ 8110 | 10207 | Match L-2 sill height |
| L-2 | 48 | 48 | AC | AL | FCTY | O-1 | 10209 | 10209/ 8110 | 10209 | Note 4 |
| L-3 | 48 | 32 | DB | AL | FCTY | O-1 | 10210 | 10210 | 10210 | See Door and Frame Types in Section 08001 |
| L-4 | 72 | 32 | DB | AL | FCTY | O-1 | 10210 | 10210 | 10210 | See Door and Frame Types in Section 08001 |
| L-5 | 18 | 30 | DB | AL | FCTY | O-1 | 10208 | 10208/ 8110 | 10208 | Sill at 13'-0" AFF |
| L-6 | 18 | 30 | DB | AL | FCTY | O-1 | 10208 | 10208/ 8110 | 10208 | Sill at 13'-0" AFF |

| Opening | | | Louver | | | | Details | | | |
|---|---|---|---|---|---|---|---|---|---|---|
| No. | Width | Height | Type | Matl | Fnsh | Col | Head | Jamb | Sill | Other Requirements |
| L-7 | 36 | 36 | DB | AL | FCTY | O-1 | 10208 | 10208/ 8110 | 10208 | Sill at 9'-0" AFF |
| L-8 | 36 | 36 | DB | AL | FCTY | O-1 | 10208 | 10208/ 8110 | 10208 | Sill at 9'-0" AFF |

# SECTION 10400
# IDENTIFYING DEVICES

## PART 1 GENERAL

### 1.01 REFERENCES

A. The following is a list of standards that may be referenced in this Section:

1. American National Standards Institute (ANSI): A117.1, American Standard for Building and Facilities Providing Accessibility and Usability for Physically Handicapped People.
2. American Society of Mechanical Engineers (ASME): A13.1, Scheme for the Identification of Piping Systems.
3. ASTM International (ASTM):
   a. A53, Standard Specification for Pipe, Steel, Black and Hot-Dipped, Zinc-Coated Welded and Seamless.
   b. D709, Standard Specification for Laminated Thermosetting Materials.
4. National Fire Protection Association (NFPA):
   a. 49, Hazardous Chemicals Data.
   b. 704, Standard System for the Identification of the Hazards of Materials for Emergency Response.
5. Occupational Safety and Health Act (OSHA).
6. U.S. Department of Transportation, Federal Highway Administration: Manual on Uniform Traffic Control Devices for Streets and Highways.

### 1.02 SUBMITTALS

A. Action Submittals:

1. Shop Drawings:
   a. Drawings showing layouts, actual letter sizes and styles, and Project-specific mounting details.
   b. Manufacturer's literature showing letter sizes and styles, sign materials, and standard mounting details.
2. Samples: Sign materials and finishes proposed for use.

B. Informational Submittals: Manufacturer's installation instructions.

## PART 2 PRODUCTS

### 2.01 DOOR NAMEPLATES

A. Material: Plastic with square corners.

B. Thickness: 1/8 inch.

C. Height: 2 inches.

D. Finish: Nondirectional matte.

E. Background: Black.

F. Letters: Engraved.

1. Size: 1 inch high.
2. Color: White.
3. Style: Helvetica medium upper case.
4. Message Text: As shown on Door and Hardware Schedule.

G. Manufacturers and Products:

1. Best Manufacturing Co., Kansas City, MO; System A-101.
2. Andco Industries Corp., Greensboro, NC; 1400 series.

### 2.02 PICTORIAL SYMBOLS

A. Material: Plastic with square corners, match door nameplates.

B. Conform to ANSI A117.1, Section 4.30.

C. Manufacturers and Products:

1. Best Manufacturing Co., Kansas City, MO; System A-101.
2. Andco Industries Corp., Greensboro, NC; 1400 series.

### 2.03 SIGNS

A. Plastic Signs (Type A):

1. Exterior: Laminated plastic subsurface image type, 3/16 inch thick with high-gloss finish.
2. Interior: Plastic, 1/8 inch thick with nondirectional matte finish and engraved letters.
3. Rounded corners.

B. Metal Signs (Type B):

1. Material: Baked enamel finished 20-gauge (minimum) steel or 18-gauge (minimum) aluminum signs.
2. Manufacturers:
   a. Seton Name Plate Co.
   b. Nutheme Illustrated Safety Co.

C. Fiberglass Signs (Type C):

1. Material: Three-ply laminated fiberglass, minimum 1/8 inch thick, with contrasting color core message layer between two clear weather-resistant surface layers.
2. Manufacturers:
   a. Best Manufacturing Co.
   b. Brady Signmark.

D. Traffic Signs (Type D):

1. Painted aluminum reflectorized signs, standard design meeting requirements of U.S. Department of Transportation, Federal Highway Administration, Manual on Uniform Traffic Control Devices for Streets and Highways.
2. Materials and Fabrication: Division 9-28 of the State of Washington Standard Specifications for Road, Bridge, and Municipal Construction.

E. Painted Signs and Flow Arrows (Type F):

1. Stenciled.
2. Paint System and Surface Preparation: As specified in Section 09900, Painting and Protective Coatings, as appropriate for material and sign location.

F. Hazardous Material Signals (Type H):

1. Conform to NFPA No. 704 and 49.
2. Material: Fiberglass 1/8 inch thick.
3. Background, Letters, and Numbers: Die-cut vinyl with pressure sensitive adhesive.
4. Manufacturers:
   a. Brady Signmark.
   b. Emed Co., Inc.

## 2.04 IDENTIFICATION LABELS

A. Pipe Labels:

1. Labels:
   a. Snap-on, reversible type with lettering and directional arrows, sized for outside diameter of pipe and insulation.
   b. Provided with ties or straps for pipes of 6 inches and over diameter.
   c. Designed to firmly grip pipe so labels remain fixed in vertical pipe runs.
2. Material: Heavy-duty vinyl or polyester, suitable for exterior use, long lasting, and resistance to moisture, grease, and oils.
3. Letters and Arrows: Black on OSHA safety yellow background.
4. Color Field and Letter Height: Meet ASME A13.1.
5. Message: Piping system name as indicated on Piping Schedule.
6. Manufacturers and Products:
   a. Brady Signmark; B-915 BradySnap-On and Strap-On Pipe Markers.
   b. Seton Identification Products; Ultra-mark Pipe Markers.

B. Equipment Labels:

1. Letters: Black bold face, 3/4 inch minimum high.
2. Background: OSHA safety yellow.
3. Materials: Either of the following:
   a. Aluminum or stainless steel with a baked-on finish suitable for use on wet, oily, exposed, abrasive, and corrosive areas.
   b. Fiberglass with encased lettering.
4. Furnish 1-inch margin with holes at each end of label, for mounting. On fiberglass labels, furnish grommets at each hole.
5. Size:
   a. 2 inches minimum and 3 inches maximum high, by 14 inches minimum and 18 inches maximum long.
   b. Furnish same size base dimensions for all labels.
6. Message: Equipment names and tag numbers as used in Section 13400, Process Instrumentation and Control Systems (PICS).
7. Manufacturers and Products:
   a. T&B/Westline Co., Rariton, NJ; Type KQ.
   b. Seton Name Plate Corp., New Haven, CT; Style EB.
   c. W.H. Brady Co., Milwaukee, WI; Fiber-Shield.

2.05 ANCILLARY MATERIALS

A. Fasteners: Stainless steel screws or bolts of appropriate sizes.

B. Pipe Posts: 2-1/2-inch galvanized steel pipe meeting ASTM A53, Type S, Grade B.

C. Chain: Type 304 stainless steel, No. 16 single jack chain or No. 2 double loop coil chain.

**PART 3 EXECUTION**

3.01 INSTALLATION—GENERAL

A. In accordance with manufacturer's recommendations.

B. Mount securely, plumb, and level.

3.02 DOOR NAMEPLATES AND PICTORIAL SYMBOLS

A. Attach to doors or walls adjacent to doors with self-sticking removable adhesive. See Door and Hardware Schedule for locations. Messages as shown in "Other Requirements" column of Door and Hardware Schedule.

B. Mount with bottom of nameplate at 5 feet 6 inches above floor.

3.03 SIGNS

A. Fasten to walls or posts or hang as scheduled. Anchor in place for easy removal and reinstallation with ordinary hand tools.

B. Information and Safety Signs:

1. Install facing traffic. Locate for high visibility with minimum restriction of working area around walkways and equipment.
2. Install as scheduled.
3. Removable with ordinary hand tools without leaving scars on structure or equipment.

C. Traffic Signs: Mount each sign on scheduled support using two 1/4-inch stainless steel bolts through sign and post. Install facing traffic at locations and in manner shown in U.S. Department of Transportation, Federal Highway Administration, Manual on Uniform Traffic Control Devices for Streets and Highways.

D. Hazardous Material Signals:

1. Install where required by NFPA No. 704 and UFC, Chapter 79.
2. Install at entrances to spaces where hazardous materials are stored, dispensed, used, or handled and on sides of stationary tanks.
3. Specific Materials:

| Hazardous Materials | | | | | |
|---|---|---|---|---|---|
| **Mark** | **Material** | **Health Hazard (Blue)** | **Flammability Hazard (Red)** | **Instability Hazard (Yellow)** | **Special Hazard (White)** |
| H-3 | Calcium Hydroxide (95% + solid) | 3 | 0 | 0 | COR |
| H-13 | Sodium Bisulfite (25-38% solution) | 2 | 0 | 0 | |
| H-16 | Sodium Hypochlorite (12-15% solution) | 3 | 0 | 0 | COR |
| H-21 | Creosote Byproduct | 2 | 1 | 0 | 0 |

3.04 IDENTIFICATION LABELS

A. Pipe Labels:

1. Locate at connections to equipment, valves, or branching fittings at wall boundaries.
2. At intervals along piping not greater than 18 feet on center with at least one label applied to each exposed horizontal and vertical run of pipe.
3. At exposed piping not normally in view, such as above suspended ceilings and in closets and cabinets.
4. Supplementary Labels: Provide to Owner those listed on Piping Schedule that do not receive arrows.
5. Application: To pipe only after painting in vicinity is complete or as approved by Engineer.
6. Installation: In accordance with manufacturer's instructions.

B. Equipment Labels:

1. Locate and install on equipment or concrete equipment base as directed by Engineer.

2. Anchor to equipment or base for easy removal and replacement with ordinary hand tools.

3.05 SUPPLEMENT

A. The supplement listed below, following "End of Section," is a part of this Specification.

1. Sign Schedule: A tabulation of characteristics and mounting information for each sign on Project. Provide items as scheduled. Meet requirements of Occupational Safety and Health Act (OSHA).

**END OF SECTION**

| SIGN SCHEDULE | | | | | | | | | | | | | | |
|---|---|---|---|---|---|---|---|---|---|---|---|---|---|---|
| Sign | | | | | | | | | Lettering | | | | | |
| | | | Size | | | Mounting | | | | | | | | |
| No.[1] | Type[2] | Format[3] | Width | Height | Color | Location | Method | Height to Top | Height | Style | Color | Message | Faces | Other Requirements |
| C-1 | C | 10402 | 20" | 14" | Yellow | Hanging | Chain | 5'-6" | 1" min. | Helvetica | Black | CAUTION Equipment Starts Automatically | 1 | Location of sign(s) shown on Drawings |
| C-2 | C | 10402 | 20" | 14" | Yellow | Wall | Bolts | 5'-6" | 1" min. | Helvetica | Black | CAUTION Ear Protection Required | 1 | Location of sign(s) shown on Drawings |
| D-1 | C | 10401 | 20" | 14" | White | Door | Screws or Bolts | 5'-6" | 1" min. | Helvetica | Black | DANGER High Voltage | 1 | Location of sign(s) shown on Drawings |
| D-4 | C | 10401 | 20" | 14" | White | Wall | Bolts | 5'-6" | 1" min. | Helvetica | Black | DANGER No Smoking | 1 | Location of sign(s) shown on Drawings |
| D-5 | B | 10401 | 20" | 14" | White | Pipe Post | Bolts | 3'-6" | 1" min. | Helvetica | Black | DANGER No Smoking | 1 | Location of sign(s) shown on Drawings |
| D-6 | C | 10401 | 20" | 14" | White | Wall | Bolts | 3'-6" | 1" min. | Helvetica | Black | DANGER Nonpotable Water Not for Drinking | 1 | Locate at interior W2 hose valves |
| H-* | H | 10406 | 10" min. | 10" min. | * | Wall | Screws | 5'-6" | 4" | Block | Black | * | 1 | *See format detail and Spec Article, Signs. Location of sign(s) shown on Drawings. |

## SIGN SCHEDULE

| Sign | | | | | | | | | Lettering | | | | | |
|---|---|---|---|---|---|---|---|---|---|---|---|---|---|---|
| | | | Size | | | Mounting | | | | | | | | |
| No.[1] | Type[2] | Format[3] | Width | Height | Color | Location | Method | Height to Top | Height | Style | Color | Message | Faces | Other Requirements |
| I-1 | A | -- | As required | | White | Post | Bolts | 5'-6" | 1" min. | Helvetica | Black | All Trucks Must Wash Tires | 1 | |
| T-3[4] | D | 10404 | 12" | 18" | Blue | Pipe Post | Bolts | 5'-6" | 1" min. | Block | White | *HANDICAPPED PARKING STATE PERMIT REQUIRED | 1 | *With symbol above. Locate at ADA parking stall shown on 05-CL-101. |
| W-1 | C | 10403 | 20" | 14" | Orange | Wall | Bolts | 5'-6" | 1" min. | Helvetica | Black | WARNING Corrosive Materials Wear Required Protection | 1 | Location of sign(s) shown on Drawings. Also provide one additional sign to be field located with lime storage. |
| W-2 | C | 10403 | 20" | 14" | Orange | Wall | Bolts | 5'-6" | 1" min. | Helvetica | Black | WARNING Eye Protection Required in this Area | 1 | |
| W-3 | C | 10403 | 20" | 14" | Orange | Wall | Bolts | 5'-6" | 1" min. | Helvetica | Black | WARNING Hazardous Materials Wear Required Protection | 1 | Location of sign(s) shown on Drawings. |
| Y-1[4] | D | -- | Downward pointing equilateral triangle 24" sides | | White w/red border | Post | Bolts | 7'-0" | 1" min. | Block | Red | YIELD | 1 | Location of sign(s) shown on Drawings. |

**SIGN SCHEDULE**

| Sign | | | | | | | | | | | | | | |
|---|---|---|---|---|---|---|---|---|---|---|---|---|---|---|
| | | | Size | | | Mounting | | | Lettering | | | | | |
| No.[1] | Type[2] | Format[3] | Width | Height | Color | Location | Method | Height to Top | Height | Style | Color | Message | Faces | Other Requirements |

[1]Numbers refer to a particular sign type with a particular message.
[2]Letters refer to sign types specified in this section.
[3]Numbers refer to Design Details that show sign layout.
[4]Verify requirements for this sign with Laws and Regulations in state where Project is located.

# SECTION 10500
# LOCKERS

## PART 1 GENERAL

### 1.01 SUBMITTALS

A. Shop Drawings:

1. Manufacturer's literature describing products proposed for use. For lockers show individual locker construction and overall dimensions.
2. Color charts or samples illustrating colors available.

B. Quality Control Submittals: Installation instructions.

C. Certify percentage of recycled content and percentage of post-consumer/post-industrial recycled content of recycled plastic.

D. Recycled post-consumer content to be a minimum of 50 percent for lockers and locker benches.

### 1.02 MANUFACTURER'S WARRANTY

A. Manufacturer shall warranty lockers for a period of 10 years against delamination or breakage of any of the plastic components under normal use.

## PART 2 PRODUCTS

### 2.01 LOCKER AND SHOWER BENCH MANUFACTURERS

A. Comtec Industries.

B. Santana Products, Inc.

### 2.02 LOCKERS

A. Type: Standard, single-tier, single-door type, made of solid plastic.

1. Locker sides, backs, tops, bottoms, and shelves, doors and frames made from high impact, high-density polyethylene (HDPE) formed under pressure into solid plastic components 3/8-inch thick minimum, with homogenous color throughout.
2. Continuous latch, capable of accepting various locking mechanisms, shall be securely fastened to the entire length of the door.

3. Coat hooks shall be made from chrome steel and attached with tampered screws.

B. Size: 15 inches wide by 24 inches deep by 72 inches high.

C. Top: Sloped.

D. Bottom: Flat for mounting on raised base as shown on Drawings.

E. Doors: Standard, with louvers top and bottom.

F. Shelves: One hat shelf.

G. Locks: Built-in keylock; furnish key.

H. Filler Panels: Manufacturer's standard, to suit locker arrangement shown on Drawings.

I. Coat Hooks: Three single-prong wall hooks in each compartment.

J. Number Plates: Noncorrosive with black numerals, numbered consecutively as indicated on Drawings.

K. Finish:

1. Tops, bottoms, side-walls, shelves and backs to be commercial grade matte finish.
2. Doors and Frames: Textured finish ("Orange Peel"). All components to be of the same color.

L. Color: As scheduled in Section 09000, Finish Schedules.

2.03 SHOWER BENCH

A. Size: 9-1/2 inches wide by approximately 18 inches high; length as indicated on Drawings.

B. Seat: 1-3/8 inches thick minimum with all edges rounded to a 1/4-inch radius and having homogeneous color throughout. Fabricated from HDPE containing a minimum 10 percent recycled material manufactured under high pressure forming a single component which is waterproof, non-absorbent and has a self-lubricating surface that resists marking with writing utensils. All plastic components to have protective plastic covering.

C. Pedestals:

1. Plastic legs and base.
2. Floor anchored.
3. Spacing not to exceed 36 inches on center.

D. Finish and Color:

1. Bench Top and Pedestal: As scheduled in Section 09000, Finish Schedules.

## PART 3 EXECUTION

### 3.01 LOCKER INSTALLATION

A. Install lockers at the location shown on Drawings in accordance with the manufacturer's instructions for plumb, level, rigid, and flush installation.

B. Securely attach units to base, wall(s), and to each other as recommended by the manufacturer.

C. Align and level lockers with shims where necessary to compensate for irregularities in the base and wall.

D. Adjust doors and latches for proper operation, and leave lockers neat and free from soil and imperfections.

E. Attach number plates after lockers are in place.

### 3.02 SHOWER BENCH INSTALLATION

A. Install benches in a straight, rigid, plumb and level manner. Securely anchor to floor with suitable anchors as recommended by manufacturer.

**END OF SECTION**

# SECTION 10520
# PORTABLE FIRE AND SAFETY EQUIPMENT

## PART 1 GENERAL

### 1.01 REFERENCES

A. The following is a list of standards which may be referenced in this section:

1. National Fire Protection Association (NFPA): No. 10, Standard for Portable Fire Extinguishers.
2. Underwriters Laboratories Inc. (UL): Fire Protection Equipment List.

### 1.02 SUBMITTALS

A. Action Submittals: Manufacturer's product data for each item including sizes, ratings, UL listings, or other certifications, and mounting information.

## PART 2 PRODUCTS

### 2.01 PORTABLE FIRE EXTINGUISHERS

A. General:

1. Conform to NFPA 10 for fire extinguishers.
2. Furnish fire extinguishers and cabinets from one manufacturer.
3. All Extinguishers: UL listed, charged and ready for service.

B. Multipurpose Hand Extinguisher (F. Ext-1):

1. Tri-class dry chemical extinguishing agent.
2. Pressurized, red enameled steel shell cylinder.
3. Activated by top squeeze handle.
4. Agent propelled through hose or opening at top of unit.
5. For use on A, B, and C class fires.
6. Minimum UL Rating: 4A-60B:C, 10-pound capacity.

C. Carbon Dioxide Hand Extinguisher (F. Ext-2):

1. Carbon dioxide.
2. Pressurized, red enameled steel shell cylinder.
3. Activated by top squeeze handle.
4. Agent propelled through hose and spreader nozzle.
5. For use on B and C class fires.

6. Minimum UL Rating: 10B:C, 15-pound capacity.

2.02 RECESSED EXTINGUISHER CABINET

A. Body: Stainless steel, 18-gauge, 18-8 alloy, No. 4 finish, recessed type, with break-glass door.

B. Manufacturers and Products:

1. J.L. Industries; Cosmopolitan 2037 G10.
2. Larsen's Manufacturing Co.; Architectural Series Model 2712-RL.
3. Modern Metal Products; Model 104SR-3.

2.03 FIRST-AID CABINETS AND SUPPLIES

A. Manufacturers:

1. Afassco, Inc.
2. Johnson & Johnson.
3. Zee Medical Products Co., Inc.

B. Cases:

1. Enameled metal or break-resistant plastic.
2. Carrying handles.
3. Made to hang on wall.

C. Supplies: Quantities to serve 15 people.

2.04 ACCESSORIES

A. Fasteners: Furnish necessary screws, bolts, brackets, and other fastenings of suitable type and size to secure items of fire and safety equipment in position.

1. Metal expansion shields for machine screws at concrete and masonry.
2. Interior: Rust-resistant.
3. Exterior: Stainless steel.

B. Brackets: For all hand extinguishers not located in cabinets, furnish heavy-duty brackets with clip-together strap for wall mounting.

## PART 3 EXECUTION

### 3.01 INSTALLATION

A. Install where indicated or directed and following manufacturer's recommendations.

B. Plumb and level equipment.

C. Rigidly attach cabinets and brackets to structure.

D. Provide adequate backing for mounting surfaces.

E. Safety Chart: For each breathing apparatus, provide wall chart containing instructions for use and recommendations for safe handling of chlorine containers, emergency procedures, and applicable principles of first-aid.

### 3.02 PORTABLE FIRE EXTINGUISHERS AND CABINETS

A. Provide at locations shown or as directed by Engineer.

B. Mount hangers securely in position, following manufacturer's recommendations.

C. Top of Extinguisher: No more than 54 inches above floor.

### 3.03 FIRST-AID CABINETS

A. Provide at locations shown or as directed by Engineer.

**END OF SECTION**

# SECTION 10800
# TOILET AND BATH ACCESSORIES

## PART 1 GENERAL

### 1.01 SUBMITTALS

A. Action Submittals:

1. Shop Drawings: Manufacturer's literature clearly indicating:
   a. Engineer's identification mark, size, and description of components.
   b. Base material with surface finish inside and out.
   c. Hardware and locks and attachment devices.
   d. Description of rough-in framing.
   e. Details of blocking and anchorage required.

B. Informational Submittals:

1. Distributor's List: List of local distributors for all supplies required for the accessories installed.
2. Cleaning instructions.

## PART 2 PRODUCTS

### 2.01 MANUFACTURERS

A. Materials and products specified in this section shall be products of:

1. Bobrick Washroom Equipment, Inc.
2. Bradley Corp.
3. Accessory Specialties, Inc.
4. Watrous, Inc.

### 2.02 TOILET AND BATH ACCESSORIES

A. Furnish accessory items listed where indicated by mark or note on Drawings.

| Item | Mark | Bobrick | Bradley |
|---|---|---|---|
| Surf. Mounted Roll Toilet Paper Dispenser | TPD | No. B-2740 | No. 5241-50 |
| Wall Mounted Liquid Soap Dispenser | SD-2 | No. B-4112 | No. 6542 |
| Mirror and Shelf, Size on Dwgs | MIR-S | No. B-292 | No. 7805 |

| Item | Mark | Bobrick | Bradley |
|---|---|---|---|
| Recessed Paper Towel Dispenser and Receptacle | PTD-1 | No. B-3944 | No. 234 |
| Surf. Mounted Napkin Disposal | ND | No. B-270 | No. 4781-15 |
| Mop and Broom Holder (24") | M&BH | No. B-223 x 24 | No. 9953 |
| Robe Hook | RH | No. B-6727 | No. 9124 |
| Grab Bars (toilet, corner type) | GB-1 | No. B-68137 | No. 812-059 |
| Soap Dish and Bar | SD/GB | No. B-439/4390 | No. 940/9402 |
| Shower Curtain Rod | SCR | No. B-207 | No. 9538 |
| Shower Curtain w/Hooks | SC | No. B-204-2 | No. 9537 |
| Towel Pin | TP | No. B-6777 | No. 9314 |

B. Finish:

1. Satin stainless steel.
2. Manufacturer's or brand name on face of units is not acceptable.

C. Anchors: Furnish anchors, fasteners, or other devices necessary for a complete, secure installation.

1. Fasteners: Tamper-proof screws or bolts.

D. Supplies: Furnish fill supplies, such as paper goods, soap, and napkins, as recommended by accessory manufacturer.

## PART 3 EXECUTION

### 3.01 PREPARATION

A. Coordinate support framing and backing as necessary for the proper installation of all accessories.

### 3.02 INSTALLATION

A. Locate where mark is shown on Drawings at height indicated or as recommended by Engineer.

B. Follow manufacturer's instruction and recommendations.

C. Install and securely anchor all accessories in their proper locations, plumb and level and without distortion.

D. Remove all protective maskings and clean surfaces, leaving them free of soil and imperfections.

E. Fill all units with necessary supplies within 10 days before Completion of Startup.

F. Deliver to Owner all keys and devices required to fill and service units.

**END OF SECTION**

# SECTION 10999
# MISCELLANEOUS SPECIALTIES

## PART 1 GENERAL

### 1.01 SUMMARY

A. Section includes:

1. Office furniture.
2. Writing boards.
3. Mobile ladder.
4. Entrance mat.

### 1.02 REFERENCES

A. The following is a list of standards which may be referenced in this section:

1. ASTM International:
   a. A591, Standard Specification for Steel Sheet, Electrolytic Zinc-Coated, for Light Coating Weight [Mass] Applications.
   b. E84, Standard Test Method for Surface Burning Characteristics of Building Materials.
2. Underwriters Laboratories Inc. (UL): Fire Protection Equipment List.

### 1.03 SUBMITTALS

A. Action Submittals: Manufacturers' descriptions, installation data, color charts, and cleaning and service instructions for all items proposed for use. Clearly identify each item.

## PART 2 PRODUCTS

### 2.01 OFFICE FURNITURE

A. Desk (D-1):

1. Double pedestal steel desk with laminate top and center pencil drawer.
2. HON Model No. 34962, 60 inches wide by 30 inches deep by 29-1/2 inches high.
3. Location/Quantity: Control Room; one.
4. Finish: Chrome plated tubular steel legs, charcoal (S) painted body, and light gray (Q) laminate top.

B. Chair (C-1):

1. High back swivel armchair with contoured back support. Features include tilt, tilt tension, tilt lock, loop arms and five-star base with dual-wheeled casters.
2. HON Model No. 4001.
3. Location/Quantity: Control Room; one.
4. Finish: Black (T) frame with HA Synergy Nylon fabric in color 19 Charcoal.

C. Bookcase (B-1):

1. Steel bookcase with adjustable shelving.
2. HON Model No. S42ABC, 34-1/2 inches wide by 12-5/8 inches deep by 41 inches high.
3. Location/Quantity: Control Room; two.
4. Finish: Baked enamel; Charcoal (S).

2.02 WRITING BOARDS

A. Materials: Stretcher level sheet steel facing, 28-gauge minimum; plywood, particle, or hardboard; anodized extruded aluminum frame and tray.

B. Composition: Face sheet bonderized and surfaced to accept watercolor and semipermanent writing inks with selective erasability; Class 1 Fire Hazard Classification with flame spread of 25 or less when tested in accordance with ASTM E84; bonded to plywood, hard, or particle board backing.

C. Finish and Color: White porcelain enamel semigloss writing surface finish impervious to cracking, checking, chipping, and peeling. Extruded aluminum frame and tray clear anodize finish.

D. Size: As noted on Drawings.

E. Accessories: Twelve watercolor markers, six black and six assorted colors compatible with writing surface; cleaners, towels, magnetic strips, and instruction booklet.

F. Manufacturers:

1. Alliancewall Corp.
2. Best-Rite Chalkboard Co.
3. Carolina Chalkboard Co.
4. Claridge Products and Equipment, Inc.
5. Greensteel, Inc.

6. Weber Costello Co.

2.03 MOBILE LADDER

A. Materials and Configuration:

1. Medium duty aluminum ladder with integral platform having minimum weight capacity of 250 pounds. Swivel castors on rear legs for rolling capability. Base bracing configured to allow for straddling of objects. Removable back handrail.
2. Meet OSHA and ANSI A14.7 Standards.
3. Platform elevation approximately 34 inches and stair/platform width approximately 24 inches.

B. Manufacturers and Products:

1. McMaster-Carr; Model No. 7995T2.
2. Or approved equal.

2.04 ENTRANCE MAT

A. Materials and Configuration:

1. 3/8-inch thick polypropylene carpet top mat with vinyl backing and black finished edge on all sides.
2. Size: 36-inches deep by 60-inches wide.

B. Manufacturers and Products:

1. McMaster-Carr; Model No. 9297T43.
2. Or approved equal.

**PART 3 EXECUTION**

3.01 INSTALLATION OF SPECIALTIES

A. Follow manufacturer's recommendations and printed instructions. Consult with Engineer so that minor adjustments in the locations can be decided if necessary.

1. Install materials plumb or level as applicable and attach securely to adjacent materials with suitable fasteners.
2. Prevent scratching or damaging adjacent materials during installation.
3. Install where shown on Drawings or as indicated by Engineer.

**END OF SECTION**