FINAL
FIELD SAMPLING PLAN
FOR
SOIL SAMPLING
AREA IV RADIOLOGICAL STUDY
SANTA SUSANA FIELD LABORATORY
VENTURA COUNTY, CALIFORNIA

Prepared for:

U.S. Environmental Protection Agency Region 9
75 Hawthorne Street
San Francisco, California 94105

U.S. EPA Contract Number: EP-S7-05-05
Task Order Number: 0038

March 05, 2012

HGL
HydroGeoLogic, Inc

FINAL
FIELD SAMPLING PLAN
FOR
SOIL SAMPLING
AREA IV RADIOLOGICAL STUDY
SUSANA FIELD LABORATORY
VENTURA COUNTY, CALIFORNIA

Prepared for:

U.S. Environmental Protection Agency Region 9
75 Hawthorne Street
San Francisco, California 94105

Prepared by:

HydroGeoLogic, Inc.
5800 Woolsey Canyon Road
Building 204
Canoga Park, California 91304

March 05, 2012

This page was intentionally left blank.

TABLE OF CONTENTS

Page

1.0 INTRODUCTION 1-1
- 1.1 SITE HISTORY 1-2
- 1.2 OBJECTIVES OF SOIL SAMPLING 1-2
- 1.3 MAJOR TASKS COVERED BY THIS FIELD SAMPLING PLAN 1-3

2.0 SITE BACKGROUND 2-1
- 2.1 SITE LOCATION AND DESCRIPTION 2-1
- 2.2 RADIONUCLIDES OF CONCERN 2-1
- 2.3 PHYSICAL SITE SETTING 2-2
  - 2.3.1 Topography and Drainage 2-2
  - 2.3.2 Soils 2-3
  - 2.3.3 Geology 2-3
    - 2.3.3.1 Chatsworth Formation 2-3
    - 2.3.3.2 Santa Susana Formation 2-4
    - 2.3.3.3 Geologic Structures at the Santa Susana Field Laboratory 2-4
- 2.4 HYDROGEOLOGY 2-4
- 2.5 HYDROLOGY 2-5

3.0 DATA QUALITY OBJECTIVES 3-1
- 3.1 PROBLEM STATEMENT 3-1
- 3.2 GOALS OF THE INVESTIGATION 3-1
- 3.3 IDENTIFY INFORMATION INPUTS 3-1
- 3.4 BOUNDARIES OF THE INVESTIGATION 3-1
- 3.5 ANALYTIC APPROACH 3-2

4.0 SAMPLING PROGRAM AND ANALYTICAL SUMMARY 4-1
- 4.1 ROUND 1 TARGETED SAMPLING 4-1
  - 4.1.1 Findings Identified in the HSA Technical Memoranda 4-2
  - 4.1.2 Past Radiological Surveys and Soil Sampling 4-3
  - 4.1.3 Gamma Radiation Survey 4-3
  - 4.1.4 Geophysical Survey 4-3
  - 4.1.5 Site Reconnaissance 4-3
- 4.2 ROUND 2 SAMPLING—STEP-OUT SAMPLING 4-4
- 4.3 RANDOM SAMPLING 4-5
- 4.4 SOIL SAMPLING 4-5
  - 4.4.1 Surface Soil Sampling 4-5
  - 4.4.2 Subsurface Soil Sampling 4-6
- 4.5 FIELD MEASUREMENTS 4-6
  - 4.5.1 Borehole Gamma Logging 4-6
  - 4.5.2 Gamma Scanning of Soil Samples 4-7
  - 4.5.3 Photoionization Detector Measurements 4-7

TABLE OF CONTENTS (Continued)

Page

5.0 FIELD ACTIVITY METHODS AND PROCEDURES 4-1
5.1 MOBILIZATION ACTIVITIES 5-1
5.1.1 Operations and Site Security 5-1
5.1.2 Site Preparation 5-1
5.1.3 Utility Location and Clearance 5-2
5.1.4 Equipment, Supplies, and Containers 5-2
5.1.5 Health and Safety 5-3
5.2 SURFACE SOIL SAMPLING PROCEDURES 5-3
5.3 SUBSURFACE SOIL SAMPLING PROCEDURES 5-4
5.4 BOREHOLE GAMMA LOGGING 5-6
5.5 QUALITY CONTROL SAMPLES 5-7
5.5.1 Field Duplicates 5-7
5.5.2 Equipment Rinsate Blanks 5-7
5.5.3 Decontamination Source Water Blanks 5-8

6.0 FIELD OPERATIONS DOCUMENTATION 5-1
6.1 DAILY FIELD REPORTS 6-1
6.2 FIELD LOGBOOK 6-1
6.3 PHOTOGRAPHIC RECORDS 6-2
6.4 SAMPLE DOCUMENTATION 6-3
6.4.1 Sample Identification System 6-3
6.4.2 Chain-of-Custody Records 6-3
6.5 SAMPLE MANAGEMENT 6-4
6.6 EQUIPMENT TESTING, INSPECTION AND MAINTENANCE 6-5
6.7 CALIBRATION OF FIELD EQUIPMENT 6-6
6.8 EQUIPMENT DECONTAMINATION 6-6
6.8.1 Decontamination of Large Equipment 6-6
6.8.2 Decontamination of Small Equipment 6-7
6.9 INSPECTION AND ACCEPTANCE OF SUPPLIES AND CONSUMABLES 6-7

7.0 DATA EVALUATION AND REPORTING 7-1
7.1 DATA VERIFICATION 7-1
7.2 DATA VALIDATION 7-1
7.3 DATA REPORTING 7-1

8.0 SURVEYING 7-1

9.0 INVESTIGATION-DERIVED WASTE MANAGEMENT 9-1

10.0 REFERENCES 10-1

LIST OF TABLES

Table 2.1	Historical Radionuclides for Analysis Used in Background Study
Table 2.2	Historical Extended Suite with Strikeouts
Table 2.3	Default and Site-Specific Analytical Suites
Table 4.1	Summary of Sample Containers, Preservatives, Sample Volumes and Holding Time Requirements
Table 5.1	Field Equipment and Supplies
Table 6.1	Field Sample Numbering Scheme

LIST OF FIGURES

Figure 1.1	Site Location Map
Figure 2.1	Santa Susana Field Laboratory Topographic Map
Figure 2.2	Santa Susana Field Laboratory Geologic Map

LIST OF APPENDICES

Appendix A	Field Operating Procedures and Standard Operating Procedures
Appendix B	Field Forms
Appendix C	Technical Memorandum Radiological Trigger Levels

This page was intentionally left blank.

LIST OF ACRONYMS AND ABBREVIATIONS

ASTM	American Society for Testing and Materials
bgs	below ground surface
DOE	U.S. Department of Energy
DPT	direct-push technology
DQO	data quality objective
ETEC	Energy Technology Engineering Center
FOP	field operating procedure
FSP	Field Sampling Plan
GPS	global positioning system
HGL	HydroGeoLogic, Inc.
HSA	Historical Site Assessment
IDW	investigation-derived waste
NASA	National Aeronautics and Space Administration
NBZ	Northern Buffer Zone
NORM	naturally occurring radioactive materials
PID	photoionization detector
PVC	polyvinyl chloride
QAPP	Quality Assurance Project Plan
QC	quality control
RTL	Radiological Trigger Level
SOP	standard operating procedure
SSFL	Santa Susana Field Laboratory
TM	Technical Memorandum
USEPA	U.S. Environmental Protection Agency

This page was intentionally left blank.

FINAL
FIELD SAMPLING PLAN
FOR
SOIL SAMPLING
AREA IV RADIOLOGICAL STUDY
SANTA SUSANA FIELD LABORATORY
VENTURA COUNTY, CALIFORNIA

1.0 INTRODUCTION

HydroGeoLogic, Inc. (HGL) has been tasked by the U.S. Environmental Protection Agency (USEPA) to conduct a radiological characterization study at Area IV and the Northern Buffer Zone (NBZ) of the Santa Susana Field Laboratory (SSFL) Site located in Ventura County, California. This work is being executed under USEPA Region 7 Architect and Engineering Services Contract EP-S7-05-05, Task Order 0038. The technical lead on the project is USEPA Region 9. This Field Sampling Plan (FSP) describes the soil sampling effort to be performed at Area IV and adjacent Northern Buffer Zone (NBZ) hereafter collectively referred to as the "Area IV Study Area". The location of the 490-acre Area IV Study Area is illustrated on Figure 1.1.

This FSP describes the data quality objectives (DQO), field sampling methodologies, standard operating procedures (SOP), field quality assurance/quality control (QC) measures, and other general field procedures that will be used for the sampling of surface and subsurface soil. It should be noted that this FSP does not provide sample location information; the sample location information will be provided as subarea specific addenda to this FSP as they are developed. The sample locations will be determined from:

- the findings from the Historical Site Assessment (HSA);
- the aerial photograph interpretation study;
- interviews with former employees;
- results of the geophysical survey;
- results of the gamma radiation survey;
- USEPA's independent analysis of past soil sampling results;
- direct field observations.

The findings of the HSA will be detailed in a Technical Memorandum (TM) for each subarea; each FSP Addendum will correspond to specific subareas (for example, Subarea 5C, Subarea 5B etc.). A subarea specific FSP Addendum will be prepared and finalized before initiating field work in each subarea. This FSP is prepared in accordance with USEPA's guidance on Remedial Investigation and DQOs.

This FSP, together with the requirements of the Quality Assurance Project Plan (QAPP) for Soil Sampling (HGL, 2010a), represent the complete sampling and analysis requirements for

the surface and subsurface soil media addressed in this document. The QAPP for Soil Sampling has been prepared as a stand-alone planning document and was submitted under separate cover. A separate FSP and QAPP describing the procedures to be used for sampling groundwater, surface water, and sediment media have been submitted under separate cover.

1.1 SITE HISTORY

The SSFL is located in southeastern Ventura County, California, and is separated into four administrative areas. The Boeing Company owns all of Area I, except for 42 acres that are owned by the National Aeronautics and Space Administration (NASA). Area II is owned by NASA and operated by The Boeing Company; and The Boeing Company owns and operates Areas III and IV. Areas I, II, and III were used by predecessors of The Boeing Company, NASA, and the Department of Defense for rocket engine and laser testing. Chemical contamination resulting from those activities is the responsibility of The Boeing Company and NASA and is not part of the scope of this project. A 90-acre portion of Area IV is leased by the U.S. Department of Energy (DOE) and together with the remainder of Area IV comprises the 370 acres that is the scope of this radiological study.

Until its closure, The Boeing Company was responsible for operation of the DOE's Energy Technology Engineering Center (ETEC) located in Area IV. As ETEC did not have specific boundaries within Area IV, it represented a group of facilities owned by DOE and used for nuclear research and other experimental activities. From the mid-1950s until the mid-1990s, DOE and its predecessor agencies were engaged in or sponsored nuclear operations including the development, fabrication, disassembly, and examination of nuclear reactors, reactor fuel, and other radioactive materials. Associated experiments included large-scale sodium metal testing for fast breeder reactor components. Nuclear operations at ETEC included 10 nuclear research reactors, seven critical facilities, the Hot Laboratory, the Nuclear Materials Development Facility, the Radioactive Materials Handling Facility, and various test and radioactive material storage areas.

All nuclear research in Area IV was terminated in 1988, when DOE shifted its focus at SSFL from research to decontamination and decommissioning activities. Decontamination and decommissioning of the sodium test facilities started in 1996, when DOE determined that the entire ETEC facility was surplus to its mission and began formal cleanup and closure of its facilities in Area IV in preparation for returning the property to the Boeing Company.

1.2 OBJECTIVES OF SOIL SAMPLING

The primary objective of the soil sampling effort described in this FSP is to evaluate the nature of potential radiological contamination in soil within the Study Area that may have resulted from past nuclear operations and research activities that occurred at SSFL Area IV. This objective will be achieved through the collection and analysis of surface and subsurface soil samples in accordance with this FSP, the subarea specific FSP addenda, and the QAPP for Soil Sampling (HGL, 2010a).

For purposes of this FSP, radiological contamination in soil shall be defined in a manner consistent with Administrative Order on Consent between Department of Toxic Substances Control and DOE dated December 6th, 2010. Therefore, radiological contamination shall mean the presence of one or more radiological constituents above Radiological Trigger Levels (RTL) as defined by the Technical Memorandum Radiological Trigger Levels, Santa Susana Field Laboratory Site, Area IV Radiological Study (HGL, 2011b). This document is included as Appendix C to this FSP.

1.3 MAJOR TASKS COVERED BY THIS FIELD SAMPLING PLAN

The following tasks will be completed to accomplish the objective described above:

- Collect surface soil samples for laboratory analyses (Round 1 and Round 2).
- Collect subsurface soil samples for laboratory analyses (Round 1 and Round 2).
- Collect subsurface soil samples at locations of former nuclear reactors which were removed and the excavations were backfilled with potentially contaminated debris and soil fill.
- Collect surface soil samples for lithologic description at each sampling location.
- Collect subsurface soil samples for lithological description at each subsurface soil sampling location, to a depth of approximately 10 feet below ground surface (bgs) or refusal (whichever comes first).
- Conduct a borehole gamma scanning survey at each subsurface soil sampling location to potentially gain information about radiological contaminant depth in each borehole.

This page was intentionally left blank.

2.0 SITE BACKGROUND

This section describes the physical attributes of the SSFL site and provides a brief overview of the site history obtained from documents describing previous investigations. The site facility past operation history will be further described in each of the subarea HSA TMs currently being developed by USEPA.

2.1 SITE LOCATION AND DESCRIPTION

The SSFL is located in southeastern Ventura County, California, near Simi Valley (Figure 1.1). The 2,850-acre site is approximately 30 miles northwest of downtown Los Angeles between the Simi and San Fernando valleys in the Simi Hills.

2.2 RADIONUCLIDES OF CONCERN

As part of the SSFL Radiological Background Study, USEPA developed a list of radionuclides for laboratory analyses based on radionuclides which could potentially be present or have been identified in past sampling at SSFL (Table 2.1). This extensive initial list of radionuclides of concern for the background study was developed using the Hanford Site in Hanford, Washington as an initial model, with the understanding that radionuclides actually used or produced at SSFL would be a smaller list than the total number of radionuclides on the Hanford Site list. These background study radionuclides were originally selected using the following screening criteria:

- The radionuclide was or could have been used or produced at SSFL.
- The physical state of the radionuclide was not a gas. An exception to this criterion is if the radionuclide is a gas and its parent was not removed from the list, then it would be retained on the list.
- The radionuclide has a half-life greater than one year. An exception to this criterion is if the radionuclide has a half-life of less than one year and its parent was not removed from the list, then it would be retained on the list.
- The SSFL Radiological Study Technical Workgroup elected to keep a specific radionuclide on the list.

In a special session of the Technical Workgroup held September 23, 2010, comprehensive discussions were held to consider reducing the SSFL soil radiochemical analyte list to specific radionuclides to provide more effective use of resources by focusing sample analyses on radionuclides that could reasonably be observed at SSFL. During these discussions, the Technical Workgroup reached consensus to eliminate analyses of certain radionuclides from soil samples. This approach was taken to target for analysis those radionuclide's likely to be present (based on past operations and half-life) and to provide greater sample coverage of the SSFL Area IV Radiological Study. Targeting the analyses performed on each sample was agreed upon as a cost-effective way to increase the total number of soil samples collected for analyses.

Table 2.2 shows the original list of radionuclides, with radionuclides eliminated by the Technical Workgroup indicated by strikeouts. USEPA proposed two suites of radionuclides for soil analyses. The first is the default suite which includes radionuclides detected by gamma spectrometry, strontium-90 (plus yttrium-90), and isotopes of uranium, thorium, americium, curium, and plutonium. The second is the site-specific suites, which includes more than one possible combination of analyses. During Round 1 sampling, all samples will be analyzed for the default suite and in some areas the same samples include one or several site-specific suite methods based primarily on past facility operations within a given area. Both suites are summarized in Table 2.3 and include criteria for selection of the site-specific analytical suites. A final adjustment to the list of radionuclides contained in the default suite was made between the draft final (October 4, 2010) and final (February 17, 2012) versions of this document. The adjustment was to remove six radionuclides (Ag-108, Ba-133, Te-125m, Ba-137m, Rn-220, and Rn-222) from the gamma spectrometry method of the default suite because several were derived from another radionuclide (e.g., Ba-137m from Cs-137) and not determined independently. Ba-133 could not be quantified due to overwhelming positive interferences from other analytes. Due to the timing of this change, analytical results for these radionuclides will be reported with some of the early Round 1 data but not the rest or for Round 2 data.

It should be noted that further sampling and analysis during Round 2 due to an exceedance will be performed using only the methods necessary to delineate the Round 1 exceedance (i.e., a Cs-137 exceedance will require gamma spectrometric analysis only). This is a standard environmental assessment technique to focus follow-up sampling on the exceeded radionuclides.

It is possible to have an exceedance during Round 2 sample and analysis that was not identified in Round 1. Should this occur, it will be identified and documented in the soils results TM for that subarea or a similar document, as a data gap to be investigated in the future by the responsible party(ies).

2.3 PHYSICAL SITE SETTING

The physical setting of the SSFL Site in terms of localized topography, earth materials, and hydrogeological setting at SSFL are discussed in the following subsections.

2.3.1 Topography and Drainage

The SSFL is located on a ridge within the Transverse Ranges physiographic province. The facility is about 850 feet above the valleys to the north and south. While the research and support facilities within Area IV are generally located on relatively flat ground, local relief can be up to 600 feet. In the Area IV Study Area, the highest elevation (2,150 feet above mean sea level) is along the southern boundary (Figure 2.1). Along the northwest boundary, the land slopes steeply away to undeveloped land. The relatively flat area in the southern part of Area IV is called “Burro Flats.”

Surface water drainage in the northern portion of the Area IV Study Area flows north into Meier Canyon and Runkle Canyon, which are tributaries to the Arroyo Simi, flowing

westward and terminating in the Pacific Ocean. Drainage of the majority of Area IV leads to the southeast into the Bell Creek drainage system as suggested by the location of the northeast-southwest trending drainage divide on Figure 2.1. Bell Creek is the headwater and tributary of the Los Angeles River which flows south and eastward terminating in the Pacific Ocean.

Given the topographic divide and topographical rises to the east and west of Area IV, there is no drainage directly to the west or east from Area IV (U.S. Geologic Survey, 1952). The northern portion of Area IV drains generally to the north into the NBZ, which itself drains generally to the north.

Surface drainage within the Area IV Study Area is through manmade and natural ditches and swales that lead to natural streambeds. The drainage from some operational areas is directed through various settling and process ponds. The locations of surface drainage features are presented as Figure 2.1.

2.3.2 Soils

The parent material of the soil in the Area IV Study Area consists of weathered bedrock, colluviums and alluvium derived from the Chatsworth and Santa Susana Formations. According to the Natural Resources Conservation Service, approximately 40 percent of the Area IV Study Area is classified as sedimentary rock outcrop. The two predominant soil types in Area IV are a sandy loam of the Saugus series and a loam of the Zamora series. The Saugus series soils consists of deep, well drained soils that usually forms on dissected terraces and foothills and are moderately permeable. The sandy loam of the Saugus series usually has slopes of 5 to 30 percent. The Zamora series soils are typically well drained loam that forms on nearly level grade or on strongly sloping fans and terraces. The Zamora series in Area IV has slopes that range from 2 to 15 percent (U.S. Department of Agriculture, 2003).

2.3.3 Geology

The SSFL is located within the Transverse Ranges physiographic province, approximately 30 miles north of downtown Los Angeles (Baily and Jahns, 1954). Two geologic formations underlie Area IV within the SSFL: the Cretaceous Chatsworth Formation and the Tertiary Santa Susana Formation. The Chatsworth Formation underlies approximately 80 percent of Area IV. The following descriptions are derived from the Preliminary Geologic Map of the Los Angeles 30 feet by 60 feet Quadrangle, Southern California (Yerkes and Campbell, 2005). A geologic map of the area is presented as Figure 2.2.

2.3.3.1 Chatsworth Formation

The Chatsworth Formation consists of three unnamed members. The members were deposited by turbidity currents in the deep ocean at depths ranging from 4,000 to 5,000 feet. Turbidity currents cause massive submarine landslides from the continental shelf into submarine canyons which are generally more than a half-mile wide and greater than ten miles in length. During periods without turbidity currents, silt and clay particles from runoff filtered to the ocean floor and formed the siltstone strata found in the formation.

Deposited in the late Cretaceous, the Chatsworth Formation is in excess of 6,000 feet thick. The uppermost member is a thick strata of light gray to brown sandstone, which is hard, coherent, arkosic, micaceous, primarily medium grained separated by thin partings of siltstone. The middle member is a gray conglomerate of cobbles of rounded, polished clasts of quartzite, porphyry and granitic rocks in hard sandstone matrix. The lower member is gray clay shale, crumbly with ellipsoidal fracture where weathered, and may include sandstone strata.

2.3.3.2 Santa Susana Formation

The Burro Flats Fault places the Chatsworth Formation in structural contact with the Santa Susana Formation in the Area IV Study Area. The Santa Susana Formation underlies the southwestern most portion of the Area IV Study Area (Figure 2.2) and consists of four members. The unnamed uppermost layer of the Santa Susana Formation consists of gray micaceous claystone and siltstone with a limited number of thin sandstone beds. Below the uppermost layer lies a second unnamed layer that is made up of tan coherent fine grained sandstone, which locally contains thin shell-beds and calcareous concretions. Underlying this layer is the Las Virgenes Sandstone Member, which is composed of tan semi-friable bedded sandstone and is locally pebbly. The oldest member is the Simi Conglomerate Member. This member contains gray to brown cobble conglomerate with smooth cobbles of quartzite, metavolcanic and granitic rocks in sandstone matrix that locally includes thin lenses of red clay. The Santa Susana Formation was also formed by turbidity currents.

2.3.3.3 Geologic Structures at the Santa Susana Field Laboratory

The SSFL is located on the south flank of an approximately east-west striking, westward plunging syncline. There are three categories of geologic structures present in the SSFL faults/fault zones, deformation bands, and structures (Montgomery Watson Harza, 2007). The fault zones and deformation features displace primary geologic features, the former showing displacement of at least five feet and the later with minimal observed displacement (less than 6 inches). Mapped faults in the SSFL are presented on Figure 2.2. The Burro Flats Fault places the Chatsworth Formation in structural contact with the Santa Susana Formation in the southwest portion of the Area IV Study Area.

Fractures and joints are widespread in the Chatsworth Formation and these may be important conduits for groundwater and contaminant movement. Fractures are oriented parallel to bedding and dip 25 to 30 degrees to the northwest and strike N70°E. Steeply dipping joints are also present in the formation, and some cut across bedding planes. The openings are well interconnected vertically and horizontally (Cherry et al., 2007).

2.4 HYDROGEOLOGY

The groundwater system in the vicinity of SSFL is recharged by precipitation. Recharge occurs throughout the Simi Hills and rates vary with the type of geologic material, local topography, vegetation, and precipitation. The elevation of groundwater at the SSFL is up to 900 feet higher than the groundwater levels in the surrounding alluvial valleys (Simi and San Fernando valleys), suggesting that groundwater flows from the higher elevations toward the topographically lower areas.

In the Area IV Study Area, groundwater occurs in the overburden and weathered bedrock and in consolidated bedrock. Historical documents commonly refer to the saturated overburden as near-surface groundwater. Groundwater that occurs in the fractured Chatsworth Formation is referred to as the Chatsworth Formation groundwater. Within the Area IV Study Area there are 46 wells screened in the near-surface groundwater, with depth to water occurring from 8 feet to 50 feet bgs. There are 51 wells screened in the deeper Chatsworth Formation groundwater, with depth to water ranging from 7 feet to 318 feet bgs. In some areas of the SSFL the groundwater in the overburden is perched, and in other areas groundwater within the overburden is in direct communication with groundwater in the Chatsworth Formation. Downward vertical gradients are present throughout the SSFL (Camp, Dresser, and McKee, 2008).

Movement of groundwater in the Area IV Study Area is influenced by fractures, and by the groundwater divide that occurs near the center of the Area IV Study Area (Figure 2.1). Because bulk hydraulic conductivities in the rock units are low, groundwater movement is primarily through fractures in the Chatsworth Formation. These fractures have two common orientations: generally parallel to the bedding planes (dips from 25 degrees to 30 degrees to the northwest and strikes N70°E) or they are steeply dipping joints, some of which cut across bedding planes and others that do not. The fracture network is well interconnected hydraulically both horizontally and vertically. Many of the parallel bedding fractures and joints are hydraulically active with some evidence of a high degree of fracture interconnectivity (Cherry et al., 2007).

2.5 HYDROLOGY

The mean annual rainfall from 1960 to 2008, as measured at a U.S. weather station located in the northeastern part of the SSFL, averaged 18.5 inches per year with a record low of 6.15 inches in 2007 and a record high of 41.24 inches in 1998 (Montgomery Watson Harza, 2009). Although normally in the form of rain, precipitation at SSFL can also be in the form of snow during the winter months. The majority of annual precipitation falls between the months of November and March (wet season). According to Cherry et al. only a small percentage (2 to 12 percent) of this water infiltrates to the water table, resulting in recharge to the groundwater flow system in the overburden and Chatsworth Formation (Cherry et al., 2007). Therefore, most of the rainfall at the site evaporates or is transmitted directly to surface drainages through overland flow. The locations of surface drainage features are presented on Figure 2.1.

This page was intentionally left blank.

3.0 DATA QUALITY OBJECTIVES

This section summarizes the DQOs developed in the QAPP for Soil Sampling (HGL, 2010a). The DQOs are performance and acceptance criteria that clarify study objectives, define the appropriate type of data, and specify tolerable levels of potential decision errors used to establish the quantity and quality of data needed to support decisions.

3.1 PROBLEM STATEMENT

The problem to be solved by this FSP is to characterize the potential presence of radionuclide contamination in the SSFL Area IV Study Area.

3.2 GOALS OF THE INVESTIGATION

The primary goals of the soil investigation are to determine the locations within the Study Area where radionuclide concentrations in surface and subsurface soil exceed the RTLs described in Section 1.2 (or subsequently developed Lookup Table values, if the latter are promulgated prior to completion of the Radiological Study). If areas with radionuclide concentrations exceeding these levels are identified, then "step out" samples will, in many cases, be collected to further delineate the general extent of contamination as practicable. The term "step out" is used to describe a soil sample collected away from a location of elevated radioactivity for the purpose of delineating the general extent of soil contamination.

3.3 IDENTIFY INFORMATION INPUTS

Collection and analysis of surface and subsurface soil samples from targeted and random locations will be performed. Information inputs for targeted soil and random samples are described in Section 4.1.

3.4 BOUNDARIES OF THE INVESTIGATION

The geographic area of the investigation includes Area IV and the NBZ at the SSFL and is referred to in this FSP as the Area IV Study Area (Figure 1.1). The target population for the soil investigation is surface soil and all soil cores to a depth of 10 feet bgs within the Area IV Study Area, except in certain circumstances, such as in the vicinity of reactor vaults deeper than 10 feet bgs. The vertical boundary of 10 feet bgs was established based on facility operational history, knowledge of operational processes, and the results of previous remedial activities. Subsurface pipes and leach fields were located at depths less than 10 feet bgs, and known burial pits and trenches were topped with soil covers less than 10 feet thick. All subsurface soil radioactivity previously identified in the Area IV Study Area was encountered at depths less than 10 feet bgs, except for some structures associated with radiological facilities that extended deeper, such as reactor vaults which extended to approximately 40 feet bgs.

A FSP addendum for deep boreholes will be prepared to describe the sampling approach and equipment necessary to advance deeper boreholes in the vicinity of former reactor vaults. Technical rationale for selecting sampling locations will be described in a FSP addendum for deep boreholes.

Area IV has been divided into eight subareas. Their boundaries were derived from the Resource Conservation and Recovery Act Facility Investigation boundaries previously defined at SSFL. For purposes of this investigation, USEPA has designated the Resource Conservation and Recovery Act Facility Investigation units as investigation subareas. The eight subareas are:

- Subarea 3
- Subarea 5A
- Subarea 5B
- Subarea 5C
- Subarea 5D
- Subarea 6
- Subarea 7
- Subarea 8

3.5 ANALYTIC APPROACH

The parameters of interest for this characterization study are laboratory concentrations of each radionuclide of concern in individual surface and subsurface soil samples. Reported concentrations will be compared to the corresponding RTL described in Section 1.2 of this document. Laboratory uncertainty in the reported concentration will not be considered in comparison to the RTL as long as the data has been validated and the uncertainty is within the acceptable range indentified in the QAPP for Soil Sampling (HGL, 2010a). If any soil sample result exceeds its respective RTL, then one round of step-out soil samples (as described in Section 4.2 of this FSP) will be collected and analyzed to further delineate the potential radiological contamination. The step-out sampling will be carried out as part of a second round of sampling that will be described in an addendum to this FSP for each subarea.

4.0 SAMPLING PROGRAM AND ANALYTICAL SUMMARY

The investigation activities for this FSP consist of collecting surface and subsurface soil samples at targeted locations to characterize radionuclide concentrations present in soil in the Area IV Study Area. The soil samples collected will be analyzed for the radionuclides of interest listed in Table 2.1 by a National Environmental Laboratory Accreditation Program-certified laboratory. Soil sampling in each subarea will occur in two rounds. Round 1 sampling will consist of targeted soil samples as described in Section 4.1. Round 2 sampling will consist of step-out sampling as described in Section 4.2 and contingent on adequate funding, may include random sampling.

4.1 ROUND 1 TARGETED SAMPLING

In targeted sampling, the selection of the location of soil samples is based on knowledge of the subarea being investigated and on professional judgment. For this study, the selection of targeted sampling locations shall be based on a combination of existing data from historical sources and new data collection efforts. The available, historical data for the Area IV Study Area will be evaluated and summarized by USEPA in the HSA TMs. One HSA TM will be prepared for each of the eight subareas and the NBZ described in Section 3.4 and will summarize past facility radiological activities and processes, interviews of former workers, results of past radiological surveys, and an analysis of aerial photographs of the Area IV Study Area dating between 1955 and 2009. Current information also was considered in determining targeted sample locations, including the results of the gamma radiation survey, geophysical survey, and reconnaissance activities that will be conducted within each subarea before sampling commences.

For each of the eight subareas and the NBZ, a subarea specific FSP Addendum will be prepared with supporting maps showing the following:

- Findings identified in the HSA TM,
- Past radiological surveys and results of past radiological soil sampling,
- Gamma radiation anomalies identified by the gamma radiation survey,
- Geophysical anomalies identified by the geophysical survey, and
- Observations identified by the reconnaissance in each subarea.

Each subarea specific FSP Addendum will list targeted soil sampling locations based on the following:

- the likelihood that potential radiological soil contamination is present;
- the technical information, or “lines of evidence”, as described in Sections 4.1.1 through 4.1.5, that led to identifying each target sample location;
- whether the sampling is for confirmation purposes (requiring fewer sample locations) or to determine extent (requiring multiple locations); and
- Stakeholder input.

4.1.1 Findings Identified in the HSA Technical Memoranda

For each corresponding subarea, the HSA TM includes a summary of past activities involving radioactive material that could have resulted in radionuclide concentrations exceeding background values. This information has been obtained from review of hundreds of existing documents that describe past facility operational practices as well as facility processes and systems.

Each HSA TM also includes findings of interviews with former employees who worked in Area IV. During these interviews, former employees were questioned regarding their knowledge of spills or processes that may have resulted in releases of radionuclides, disposal practices for liquid and solid waste, and identification of areas where radiological investigations should be performed. The interviews were used to identify potential release areas.

This information, along with information on ground surface drainage patterns and underground utilities such as in-use or abandoned in place sewage lines and septic systems were evaluated and summarized in each of the corresponding subarea HSA TM. Each HSA TM provides a list of potential release areas recommended for further soil investigation in Round 1 sampling.

Findings were also based on review of an analysis of aerial photographs that was performed by USEPA (USEPA, 2010a). The process of photographic analysis involved the visual examination and comparison of many components of the photographic image. These components included shadow, tone, color, texture, shape, size, pattern, and landscape context of individual elements of a photograph. The photo analyst identified objects, features, and "signatures" associated with specific environmental conditions or events. The term "signature" referred to a combination of components or characteristics that indicate a specific object, condition, or pattern of environmental significance. The academic and professional training, photo interpretation experience gained through repetitive observations of similar features or activities, and deductive logic of the analyst as well as background information from collateral sources (e.g., site maps, geological reports, and soil surveys) were critical factors employed in the photographic analysis.

Based on the review of aerial photos, a list of waste disposal areas, processing areas, open storage areas, fill areas, impoundments, was prepared for each of the eight subareas in the Area IV. Each location was identified as certain, probable, or possible. Other features that were included in the analysis of aerial photographs included stains, storage tanks, pipelines, disturbed ground, mounded material, smokestacks, ground scars, building foundations, cleared areas, and buildings. Targeted soil sample locations will be identified to investigate all features labeled as certain in the aerial photographic analysis. Targeted soil sample locations may also be identified to investigate potential or possible features from the aerial photographic analysis that are co-located with information from other technical information sources.

4.1.2 Past Radiological Surveys and Soil Sampling

The results of past radiological surveys performed in the Area IV Study Area are summarized in each HSA TM for its corresponding subarea. Radiological surveys have been performed for several purposes including health and safety, characterization, remedial action support, and release. Summaries of radiological surveys were prepared identifying the type of survey performed, radionuclides identified, and an estimate of radionuclide concentrations if available.

Results of past radiological soil sampling will be evaluated to help guide Round 1 soil sampling to identify data gaps for further investigation. It should be noted that, although both past radiological surveys and past sampling results will be evaluated, the overall data evaluation includes some data which may have little bearing on current expected radiological conditions due to radionuclide decay or the removal of soils at specific locations.

4.1.3 Gamma Radiation Survey

A gamma radiation survey will be performed for 100 percent of accessible surfaces in the Area IV Study Area to identify gamma radiation anomalies. Gamma radiation anomalies can emanate from man-made and /or naturally occurring radionuclides. A list of locations of gamma radiation anomalies will be prepared for each of the eight subareas in the Area IV Study Area. Targeted soil sample locations will be identified to investigate gamma radiation anomalies associated with man-made radionuclides.

4.1.4 Geophysical Survey

A geophysical survey will be performed at targeted locations identified in the Geophysical Investigation Plan (HGL, 2010c) for the Area IV Study Area. Target survey areas within each subarea will be selected based on information summarized in the corresponding HSA TM. Any areas suspected to have subsurface radioactivity with little or no surface indication will be selected for geophysical measurements as well. For example, suspected subsurface process piping, leach fields, subsurface disposal areas, or trenches associated with past radiological activities would be selected as target areas for geophysical survey. Subsurface anomalies identified by the geophysical survey will be investigated using targeted soil samples. A list of targeted soil sample locations will be developed based on the results of the geophysical survey and included in each subarea specific FSP Addendum.

4.1.5 Site Reconnaissance

The site reconnaissance consists of visual inspections and gross gamma radiation survey that will be performed prior to entering and performing field activities in any location inside the Area IV Study Area to confirm information from other sources and observation of current conditions at that location. As a result of the visual observations, a sample location may be moved slightly or modified, depending on results of the inspection. Examples might include where samples were accidently located in a concrete culvert or on a rock formation.

4.2 ROUND 2 SAMPLING—STEP-OUT SAMPLING

After evaluating the results of soil samples collected during Round 1, additional Round 2 soil sampling locations will be identified. The Round 2 locations will include step-out sampling locations in areas where radiological contamination was detected above the RTLs. These samples will be used to further delineate the general extent of radiological contamination, as practicable. The specific step-out sampling locations will be based on the evaluation of the data provided in each HSA TM, the results of the Round 1 sampling, professional judgment, and consultation with Stakeholders. Each subarea specific FSP Addendum will present the step-out locations, the rationale for selecting the locations, and the depth interval that will be sampled within the eight subareas and the NBZ.

The following describes the steps necessary to arrive at the pattern of Round 2 step-out samples.

Step 1: Apply Professional Judgment in the Evaluation of Screening Findings

Invariably, after Round 1 soil results are screened against RTLs, some locations will be identified as having elevated radioactivity that is likely due to causes other than site operations. For example, naturally occurring radioactive materials (NORM) contained within nearby rock formations is expected in some cases to exceed the RTLs due to natural variability and distribution of NORM within the strata of consolidated versus unconsolidated fines. These exceedances will be treated as NORM and step-out samples will not be identified. Cases such as these will be evaluated on their own merit so that location-specific determinations can be made regarding the need to place step-out samples. These judgment calls will be made with input from Stakeholders and documented in the FSP addendum for each subarea. This step is necessary to focus the radiological study on the areas of greatest concern and avoid further site characterization in areas that do not warrant it.

Step 2: Identify Step-outs

Once Step 1 is implemented, each Round 1 sample location is evaluated to determine the pattern for Round 2 step-out samples. It should be noted that step-outs within locations that are designated as "likely chemical remediation areas" or decommissioning and demolition zones by the DOE may not be identified for purposes of conserving budgeted samples.

The techniques proposed in this step include (in hierarchy):

- Is elevated activity in surface or subsurface?
- Use adjacent sample results to help sufficiently characterize vertical and horizontal extent or "bound" the locations of contamination.
- Consider the physical constraints at the location of the elevated location.
- Review Round 1 justification and four lines of evidence
    - Consider nearby gamma and geophysical anomalies
    - If applicable, consider nearby results of historical soil sampling

  - Use HSA to identify previous soil excavations/D&Ds/removals
- Field truth each location and consider drainage patterns, area topography, location of roof down spouts from nearby buildings to postulate and characterize potential fate and transport. Where appropriate, use the in-situ gamma spectrometer to help place step-outs (for those findings that have detectable gamma emitting radionuclides). The use of this instrument will be in accordance with FOP 1.10 and only after the soil moisture content has been verified as being at or below 15 percent as per SOP 1.56, both included in Appendix A.
- Consider "protected" areas (i.e. cultural and biological clearances).

4.3 RANDOM SAMPLING

If USEPA determines that it supports project objectives, and contingent on sufficient funding, random sampling will be performed in the Area IV Study Area. The scope of random sampling, if any, will be described in a separate FSP Addendum that would be prepared with Stakeholder involvement.

4.4 SOIL SAMPLING

Surface and subsurface soils will be collected to meet the objectives described in Section 3.2. Surface soil is defined as the top six inches of soil (0 to 6 inches bgs) and is consistent with the Final FSP Radiological Background Study (HGL, 2009). Subsurface soil is soil greater than 6 inches bgs. Each surface and subsurface soil sample will be placed into two containers; one (half filled) 1-gallon re-sealable bag and one 8-ounce jar that will be sent to a radiochemical laboratory for analysis. The 8-ounce jar is only required for samples being analyzed for the site-specific suite. The required sample containers are listed in Table 4.1. In Round 2, the required soil quantity will depend upon the exceedance observed in Round 1. Radionuclide exceedances which are gamma spectrometry analyzed will require 4.5 pounds per each Round 2 sample. All other radionuclide exceedances will require 0.5 pounds of soil.

4.4.1 Surface Soil Sampling

Surface soil samples will be collected using hand tools and homogenized as described in SOP 16. The first round of soil samples will be analyzed for the radionuclides listed in the default analyte suite and select Round 1 soil samples also will be analyzed for the radionuclides listed in the site-specific analyte suite. The default and site-specific analytical suites are summarized in Table 2.3. Additional soil samples (step-out samples) may be collected at locations selected based on Round 1 soil sample results and analyzed for one or both analytical suites as judged necessary to support step-out sampling goals within each subarea.

The sampling methodology used to collect surface soil samples is presented in Section 5.2. The collection of QC samples is discussed in Section 5.5. Locations of targeted soil sample locations will be detailed in the subarea specific FSP Addendum.

4.4.2 Subsurface Soil Sampling

Subsurface soil sampling activities will be conducted using direct-push technology (DPT). Continuous soil cores will be collected for lithological description at each location. Generally, the DPT boreholes will be advanced to a depth of approximately 10 feet bgs or refusal. At specific targeted locations, borings may be advanced to a greater depth. For example, borings will be advanced to refusal in areas where buildings such as reactors were constructed below grade. The approach for deep borehole placement within a subarea will be described in the subarea specific FSP Addendum that will identify locations, sample depths, and sampling intervals for these unique cases.

Depth intervals to be sampled will be determined based on borehole gamma logging results. Soil associated with gamma radiation anomalies will be sampled for laboratory analysis. The depth interval that is selected for analysis will extend to the upper and lower limits of the gamma radiation anomaly; however, the soil sampling interval will be no less than one foot in length. If a gamma radiation anomaly is detected near the bottom of a specific borehole, the borehole will be extended to a depth where the anomaly is no longer detected, refusal occurs, or groundwater is encountered. More than one sample may be collected from each boring if multiple gamma radiation anomalies are detected. To ensure that sufficient soil volume is collected for laboratory analysis, multiple co-located borings may be required for the selected depth interval.

If no gamma radiation anomalies are identified, a soil sample will be collected at the upper portion of the boring (1 to 5 feet bgs). The soil within this interval will be homogenized and a representative composite sample collected for analysis. Due to the relatively low mobility of the radionuclides of interest, higher radionuclide concentrations are expected in the upper portion of the soil profile; collecting soil within the upper 5 feet will increase the likelihood of detecting radiological contamination at a particular location. This approach for selecting soil sampling intervals may be modified to target specific feature that were identified through historical records (subsurface pipelines, leach fields, tanks, etc.). These modifications will be described in the subarea specific FSP Addendum.

4.5 FIELD MEASUREMENTS

Field measurements associated with soil sampling activities include borehole gamma logging to identify subsurface gamma radiation anomalies, gamma scanning of soil cores to identify potential gamma radiation hazards, and photoionization detector (PID) measurements of soil cores to identify potential hazards from volatile chemicals.

4.5.1 Borehole Gamma Logging

Down-hole gamma scanning will be conducted at each DPT location. A gamma radiation detector will be lowered into the borehole and measurements of gamma radiation levels will be recorded every 6 inches. The results of the down-hole gamma scanning survey will be evaluated in the field. Subsurface soil samples will be collected at intervals where gamma radiation anomalies are detected. Borehole gamma logging will be performed as described in SOP 36.

4.5.2 Gamma Scanning of Soil Samples

During the collection of surface soil samples a MicroR detector will be used to monitor potential gamma radiation. The monitoring will mainly be conducted for health and safety of field workers, but also may aid in the detection of gamma anomalies. The Field Operating Procedure (FOP) for the MicroR meter is presented in the Site Safety and Health Plan (HGL, 2011c) as FOP 1.06.

During the collection of subsurface soil samples, a Geiger-Mueller (Pancake) probe will be used to screen each soil core to identify potential radiological activity. Readings will be recorded on the soil boring log for each core interval collected. Readings will be evaluated in the field to determine if there is a hazardous condition for field or laboratory workers, or an indication of potential subsurface radiological contamination. The FOP for the Pancake meter is presented in the Site Safety and Health Plan (HGL, 2011c) as FOP 1.08.

4.5.3 Photoionization Detector Measurements

A PID will be used to perform measurements of volatile organic vapor in air. Soil cores will be scanned with the PID and measurements of organic vapor concentrations will be recorded every 6 inches. Organic vapor anomalies will be evaluated in the field to determine if there is a hazardous condition for field or laboratory workers, or an indication of potential subsurface chemical contamination.

This page was intentionally left blank.

5.0 FIELD ACTIVITY METHODS AND PROCEDURES

This FSP provides the rationale and procedures that will be used to conduct the surface and subsurface soil sampling portion of the radiological investigation of the Area IV Study Area. The following subsections describe the field investigation methods and procedures that will be employed to meet the project objectives, and ensure that data of sufficient quantity and known quality are obtained to support decision making and risk evaluation. The following field activity tasks are planned:

- mobilization,
- surface soil sampling, and
- subsurface soil sampling.

Investigation-derived waste (IDW) generated during the execution of field tasks will be managed in accordance with the Site Management Plan (HGL, 2010b). The following discussion references an SOP for each activity, where applicable. Referenced SOPs are provided in Appendix A. Referenced field forms are provided in Appendix B.

5.1 MOBILIZATION ACTIVITIES

An on-site field office has been established in Building 204 as the base of operations. Site security measures have been implemented, and badges have been obtained for field personnel, including subcontractors. Additional mobilization activities and general site management procedures are described in detail in the Site Management Plan (HGL, 2010b) and summarized below.

5.1.1 Operations and Site Security

Building 204, located in Administrative Area II, is being used for the on-site field office and is providing office space and field operations support.

A lockable room within Building 204 has been designated as the sample custody room. Access to this room will be strictly controlled and only a limited number of HGL employees (field personnel) will be issued a key for entry. Samples will be stored in this room under proper chain-of-custody after they have been collected and will be held until they are shipped to the laboratory for analysis. Sample bottles and laboratory-grade water will be store in a separate lockable room. Access to this room will be strictly controlled and only a limited number of HGL employees (field personnel) will be issued a key for entry. All data forms, chain-of-custody forms and logbooks will be stored in the project file that is maintained in Building 204.

5.1.2 Site Preparation

Limited site preparation is required for the activities covered under this FSP. Vegetation clearing is being implemented to allow access for gamma scanning. Caution will be taken while moving vehicles to sampling locations. Field work will be conducted in a manner that minimizes damage to the ground surface and native plants, as detailed in the natural protection

measures presented in the Site Management Plan (HGL, 2010a). Before initiating soil sampling activities the Biological Monitor will inspect the area and flag any endangered or threatened species that will be avoided. A sampling location may be moved to avoid damaging biological, cultural, or archeological resources. If a sample location is moved, the new location will be documented in the field logbook and on the sample collection data sheet. Before surface soil or DPT sampling activities begin the top layer of organic material containing the seed bed will be set aside if present. After sampling activities are completed the seed bed will be placed back in its original position.

Other limited site preparation is described in the following subsections and the SOPs provided in Appendix A.

5.1.3 Utility Location and Clearance

The site contains numerous underground and overhead utilities. Before any intrusive activities are conducted The Boeing Company will be contacted to provide information regarding utilities in the vicinity. Additionally, HGL will subcontract a private utility locator to assist with clearing all sample locations. The mark-outs will be clearly visible (for example, neon paint, flags, stakes), distinguishable, and unambiguous with respect to identifying the utilities. EPA also marked suspicious pipes and other ferrous metal objects found during the geophysical survey.

5.1.4 Equipment, Supplies, and Containers

A room has been designated within Building 204 for equipment storage, including health and safety monitoring instruments. This room has a locking door and key access is controlled. This storage room is equipped with a work bench to provide a work space to charge monitoring equipment. Routine testing, inspection, and maintenance schedules have been established for all equipment and instruments to ensure that analytical data and field measurements generated during field activities are reliable. Preventative maintenance will be performed and documented by field personnel. Equipment testing and maintenance procedures are presented in Section 3.9 of the QAPP for Soil Sampling (HGL, 2010a).

In addition, all non-disposable sampling equipment will be decontaminated before sampling activities begin. Disposable sampling supplies, such as nitrile gloves, paper towels, permanent markers, and labels, will be purchased and stocked in the sample custody room.

Unless otherwise stated, the laboratory will provide sample containers and any preservatives for samples designated for analysis. All sample containers will be pre-cleaned and traceable to the facility that performed the cleaning. Sample containers will not be cleaned or rinsed in the field. Sample bottles will be stored in the sample custody room.

Coolers will be used to ship samples from the site to the laboratory. Coolers will be supplied by the laboratory and cleaned by the respective laboratory prior to reuse.

The SOPs provided in Appendix A list the equipment and supplies necessary to support the field activities. Table 4.1 lists required containers and preservatives.

5.1.5 Health and Safety

A Site Safety and Health Officer has been assigned to ensure that field activities are conducted in accordance with the safe work practices detailed in the Site Safety and Health Plan (HGL, 2011c). The Site Safety and Health Plan outlines health and safety practices that will be employed throughout the duration of the project.

5.2 SURFACE SOIL SAMPLING PROCEDURES

Surface soil samples will be collected using a stainless steel shovel or spade to retrieve a discrete sample from the 0 to 6 inch-bgs interval. Surface soil sampling will be conducted in accordance with SOP 16 and as described below.

Before the surface soil sample is collected, the top layer of organic material containing the seed bed will be set aside (if present). After sampling activities are completed the seed bed will be returned its original position.

The sample area will be prepared by removing leaves, grass, and surface debris. Soil will be collected from a circle approximately 12-inches in diameter to a depth of 6 inches bgs ensuring the edges are vertical to provide a representative sample. The removed soil will be placed in a stainless steel bowl for homogenization removing any debris, wood, or materials greater than 0.25 inches in size. The homogenized soil will be transferred to one (half filled) 1-gallon re-sealable plastic bags. If additional sample material is required to fill the bag, the diameter of the excavation will be expanded and the entire sample will be re-homogenized.

Samples collected for site-specific suite analysis (for example, Tritium, carbon-14, I-129 etc.) will be collected in one 8-ounce jar. The objective of this sampling is to collect a minimally disturbed soil sample that minimizes the potential for loss from volatilization. A stainless steel trowel will be used to expose fresh soil at the edges of the original excavation. The sample jar will be positioned at the bottom of the excavation and the trowel will be used to scrape the newly exposed soil directly into the jar.

The soil will be classified according to the procedures provided in SOP 24 and will be lithologically characterized in generally accordance with the following American Society for Testing and Materials (ASTM) Standard Practices:

- Classification of Soils for Engineering Purposes (Unified Soils Classification System, ASTM D-2487) (ASTM, 2006); and
- Description and Identification of Soils (Visual-Manual Procedure, ASTM D-2488) (ASTM, 2005).

Surface soil activities, including lithologic descriptions, will be recorded on a boring log field form (Appendix B). Surface soil sample information will be recorded on a Field Sampling Report form which is also provided in Appendix B.

After soil sample activities are completed and the sampling location has been properly abandoned a survey nail will be placed to mark the sampling location. In addition to the survey nail, geographic coordinates for each sampling location will be recorded using a global positioning system (GPS).

If a sample location is inaccessible for any reason, such as obscured by rock outcropping, building, or tree, or a protected species is near the proposed location, the sample location will be moved up to 30 feet in any direction to allow access. If a sample location is moved the new coordinates will be recorded in the field logbook, and the rationale for moving the sample location documented. If no accessible location is found within 30 feet of the planned location, the sampler will notify the Field Supervisor. When practical a photograph of the inaccessible location will be taken.

5.3 SUBSURFACE SOIL SAMPLING PROCEDURES

Subsurface soil sampling activities will be performed using DPT after surface soil sampling is complete. The DPT operations will be conducted by a California-licensed DPT subcontractor with HGL oversight in accordance with the SOP 27. In most cases, DPT borings will be advanced to a targeted depth of approximately 10 feet bgs or refusal. The definition of refusal for this study will be when the DPT soil sampler cannot be advanced any further below the ground surface.

As introduced in Section 1.3 and described in Section 4.4.1, soil samples may be collected at depths greater than 10 feet at some locations. These locations are concrete vaults installed below grade that were used for operation of prototype nuclear reactors. Although these vaults and reactor equipment were excavated and removed in the past, it is known that some debris was left in place within the footprint of the excavation that was filled with soil to grade. This debris and the excavation backfill may be potentially radiologically contaminated. Therefore, at these locations, boreholes will be advanced to a depth below the bottom of the concrete vault or to bedrock, so that the backfill can be radiologically characterized. The locations of the deep boreholes, the sample collection interval, the necessary radioanalysis, and justification will be provided in a separate FSP Addenda.

Soil cores will be collected using a Geoprobe Macro-Core sampler. The Macro-Core will be used in conjunction with dual tube sampling if needed to keep the borehole from collapsing. The dual tube sampling method consists of a 3.25 inch outer drive casing and an inner soil sampling barrel. The Geoprobe Macro-Core sampler will be used as the inner soil sampling barrel to collect continuous soil cores from inside the outer drive casing. After the system is advanced the length of the Macro-Core sampler, the sampler will be retrieved while the drive casing is left in place to prevent the borehole from collapsing. The Macro-Core sampler provides a 1.75-inch diameter, 5-foot long soil core contained in an acetate sleeve.

The general sampling procedure is as follows:

- Drive the 3.25 inch outer drive casing and Macro-Core sampler into the sample material the length of the sampler.
- Retract and disassemble the Macro-Core sampler.
- Remove the acetate liner.
- Open the acetate liner with a cutting tool.
- Screen the soil core using a Pancake probe.
- Screen the soil core using a PID.
- Determine the depth interval to be sampled.
- Collect the sample using a clean utensil. A minimum of one kilogram will be required.
- Place the sample in an appropriate container.
- Decontaminate sampler and inner rods.
- Insert new acetate liner.
- Insert the Macro-Core sampler back inside the outer drive casing.
- Drive the 3.25 outer drive casing and Macro-Core sampler into the sample material the length of the sampler.
- Repeat until the desired depth is reached.

Where DPT sampling is not allowed due to fire hazard or inaccessibility, subsurface soils will be collected using a decontaminated hand auger. The general hand auger sampling procedure is included in SOP 16.

The entire soil core will be classified according to the procedures provided in SOP 24 and will be lithologically characterized using the ASTM D-2487 and ASTM D-2488. DPT activities, including lithologic descriptions, will be recorded on a boring log field form. Information on the boring log form will include sampling locations, sampling intervals, percent recovery, sample description, borehole gamma readings, pancake probe readings and PID readings. Subsurface soil sample information will be recorded on a Field Sampling Report form. SOP 24 is presented in Appendix A. The boring log form and the Field Sampling Report form are presented in Appendix B. A list of field equipment and supplies that will be needed to conduct the subsurface soil sampling is presented in Table 5.1.

Depth intervals for sampling will be determined in the field based on borehole gamma logging results and the best professional judgment. Depth intervals including any gamma radiation anomalies will be identified for sample collection and will be at least 1 foot long. If a gamma radiation anomaly is located near the bottom of a borehole, the borehole will be extended to a depth where the anomaly is no longer detected, refusal occurs, or the water table is encountered. The top and bottom of the sampled depth interval will be recorded on the boring log. If no gamma radiation anomalies are identified, soil between the depth intervals of 1 to 5 feet bgs will be homogenized and a representative sample containerized and sent to the laboratory for analysis.

Once the sample depth intervals have been determined following the borehole gamma logging, the soil from the selected interval will be transferred to a stainless steel bowl for homogenization. Any debris, wood, or materials greater than 0.25 inches in size will be removed from the sample. The sample will be homogenized and transferred to a single (half filled) 1-gallon re-sealable plastic bags and one 8-ounce jar (if analysis includes site-specific suite). The sample jars will be filled first to minimize volatilization. If additional sample material is required to fill the bag, a second borehole will be advanced and additional soil will be collected from the same depth interval.

After the borehole has been properly abandoned, a magnetic spike will be placed to mark the sampling location. In addition to the magnetic spike, geographic coordinates for each sampling location will be recorded using a GPS unit.

If a sample location is inaccessible for any reason, such as the location being obscured by a rock outcropping, building, or tree; or the presence of a protected precludes sampling at the location, the sample location will be moved up to 30 feet in any direction to allow access. If a sample location is moved, the new coordinates will be recorded in the field logbook, and the rationale for moving the sample location will be documented. If no accessible locations are found within 30 feet of the planned location, the sampler will notify the Field Supervisor. When practical a photograph of the inaccessible location will be taken.

5.4 BOREHOLE GAMMA LOGGING

As part of the soil sampling process, a gross gamma count rate survey will be conducted for each DPT borehole location. The borehole gamma logging will be performed in accordance with SOP No. 36.

The survey will be conducted to identify subsurface gamma radiation anomalies and to characterize the natural subsurface gamma profile. After subsurface cores have been collected to the planned depth, the Macro-Core sampler and the inner sampling rods will be removed from the borehole. The 3.25-inch outer diameter outer drive casing will be left in the ground to keep the borehole from collapsing. Polyvinyl chloride (PVC) piping fitted with an end cap will be lowered to the bottom of the borehole. The PVC will be schedule 40 and have an inner diameter of at least 2-inches. Next, downward pressure will be applied to the PVC piping to dislodge the disposable tip attached to the outer drive casing. The outer drive casing will then be retracted using the rod grip pull system, while the DPT operator applies continuous downward pressure to the PVC piping, ensuring that the PVC remains positioned at least 6 feet bgs. After the outer drive casing has been fully retracted from the borehole, the remaining PVC piping will be measured to document the final completion depth.

The gamma logging probe will be lowered into the PVC pipe slowly, at a rate of approximately 1-inch per second, while observing the count rate shown on the meter's analog or digital display. The probe will be stopped at each 6-inch interval and a 1-minute static integrated measurement will be taken and recorded in the comments section of the Boring Log. The PVC pipe is cleaned between each use.

5.5 QUALITY CONTROL SAMPLES

QC samples will be used to gauge the accuracy and precision of field collection and laboratory analytical activities and to assess data usability. QC samples that will be collected in the field and submitted to the laboratory for analysis include field duplicates, equipment rinsates, and decontamination source water blanks. Each subarea specific FSP addenda will provide specific information on the number and types of analyses that will be performed. Requirements for QC samples are specified in the QAPP for Soil Sampling (HGL, 2010a) and are also summarized below.

5.5.1 Field Duplicates

Field duplicate samples will be collected at a rate of 1 per 20 (5 percent) environmental samples collected for this project. The conventional procedure for collection of field duplicate soil samples is to perform a field homogenization of the sample and submit two aliquots as separate samples. Based on the requirements of this project, field homogenization is considered inadequate to obtain representative split aliquots and field duplicate samples processed in this way would have a source of variability associated with them that would not be applicable to other soil samples. Soil field duplicates for this project will be obtained using co-located samples rather than samples homogenized and split in the field. Surface soil duplicate samples would be collected within 2 feet of the location of the parent sample. Subsurface soil duplicate samples would be collected from borings offset slightly from the boring advanced to collect the parent sample.

Field duplicate samples will be submitted to the laboratory as blind QC samples (with unique sample identifiers) to ensure that they are analyzed in the same manner as all other environmental samples. Field duplicate results will not be used in the data validation process to determine data qualifiers or assess usability. Field duplicate results will be available to data users to provide an estimate of overall precision of sample collection, field sample preparation, site homogeneity, and laboratory analysis (total measurement of sample variability).

5.5.2 Equipment Rinsate Blanks

One equipment blank will be collected for each type of sampling equipment per field team per day. These samples will be collected to ensure each field team is properly decontaminating their sampling equipment. Following decontamination procedures, the rinsate blank will be collected by pouring ASTM Type II water (also called organic free water) through or over the equipment and collecting the rinse water in the appropriate container. If any detection is noted in the blanks, the decontamination procedure will be evaluated and deficiencies will be addressed. The impact of the detections on the associated sample results will be determined.

Equipment blanks are not required if samples are collected using disposable equipment or dedicated equipment and do not contact any equipment that has also been in contact with other samples at any point in the collection process.

5.5.3 Decontamination Source Water Blanks

A sample of the ASTM Type II source water used for the equipment blank will be collected and analyzed for uranium isotopes and tritium. The decontamination source water blank samples will be collected each time a new lot of source water is received. The source water samples are necessary to document the existing radionuclide concentrations in the water used to collect the equipment blank sample.

This page was intentionally left blank.

6.0 FIELD OPERATIONS DOCUMENTATION

6.1 DAILY FIELD REPORTS

Daily Field Reports will be prepared as described in SOP 4.01 included in Appendix A. An example Daily Field Report is included in Appendix B. The following items will be recorded if applicable on the Daily Field Report:

- Work performed each day, location of work, and description of work.
- Radiation conditions encountered.
- Submittals reviewed, specifications referenced, and persons responsible for actions.
- Inspections performed, including results of inspections, problems encountered, and completed corrective action.
- Test and/or control activities performed, deficiencies noted with completed corrective action.
- Daily site safety inspection results and corrective actions taken.
- Instructions given/received and conflicts encountered in plans and/or specifications.
- Deliveries received of any equipment or materials.
- Number of subcontractors/trade personnel working on project.
- Weather conditions.
- General comments.

Daily Field Reports will be completed and provided to the Multi-Media Manager. The Daily Field Report form is presented in Appendix B.

6.2 FIELD LOGBOOK

A bound field logbook will be used to document field operations and will contain sufficient data and information to reconstruct field activities for a specific day. SOP 4.07 for field logbooks is presented in Appendix A. Critical information concerning field logbook maintenance is discussed below.

Pages in the logbook will be bound and numbered. All entries will be recorded legibly in indelible ink. At the end of each day, the last page will be signed and dated by the author(s) and a line drawn through the remainder of the page. At a minimum, the daily log will contain the following items:

- Date of the sampling event,
- Time spent on and off site,
- Current and anticipated weather conditions,
- Record of on-site personnel including subcontractors on site,
- Health and safety concerns and requirements,
- Documentation of site-specific training and tailgate sessions,
- Daily objectives,
- Identifying secondary field books associated with individual sampling teams,

- Activities accomplished, and
- Author's signature(s).

Task, or secondary field logbooks, will be generated if more than one field team or field effort is being conducted concurrently. The task logbook will be the responsibility of each field team (e.g., drilling or sampling) and will include the following items:

- Initials of the person making an entry and other personnel involved in the activity,
- Sampling location, depth, station number, date, time, and sample matrix,
- Pancake radiation survey results of the soil cores,
- PID readings of the soil cores,
- Any deviations from the FSP or QAPP for Soil Sampling (HGL, 2010a),
- Any sample preservative used,
- Photographic information and field observations as appropriate, and
- Unusual circumstances or difficulties, if any.

No pages will be removed from the logbooks for any reason. If corrections are necessary, they will be made by drawing a single line through the original entry (so that original entry can still be read) and writing in the corrected entry alongside it. The correction will be initialed and dated. Additional requirements for field logbooks are provided in the QAPP for Soil Sampling (HGL, 2010a).

6.3 PHOTOGRAPHIC RECORDS

Color photographs obtained using a digital camera may be taken to record important features of the site before the commencement of work, during project activities, and after work is complete. Based on the amount of photographic documentation required for the site, a logbook may be assigned specifically for recording all photographs taken. Otherwise, photographs will be documented in the logbooks assigned to the field team taking the photographs. Photographs will also be stored electronically by site. The following information about each photograph will be recorded in the field logbook:

- Photographer's name,
- Date and time of the photograph,
- Filename for digital photographs,
- General camera direction,
- Site or area where the photograph is taken, and
- Brief description of the subject and the field work portrayed in the photograph.

Photographs should include an object of known size to provide perspective for very small or very large objects. When practical the photographer will be positioned with the sun behind them and efforts will be made to keep shadows out of the photograph.

6.4 SAMPLE DOCUMENTATION

6.4.1 Sample Identification System

A unique five digit field sample identification number will be assigned to each sample. This field identification number will assist in tracking samples from collection through reporting. The field sample identification system is outlined in Table 6.1.

A sample label will be attached to each sample container and completed legibly with indelible ink. On the sample label will be a bar code associated with the unique field sample identification number. The sample label will be affixed to the sample bottle. The labels will identify the following:

- Client/Facility – HGL/SSFL,
- Unique field sample identification number,
- Subarea–Subarea-5C etc.,
- Group – Group 1,
- Sample Location – Location 104,
- Analytical Suite – Default, Ni-63, Ni-59,
- Collected By – TSW,
- Date the sample was collected expressed, month/day/year (05/24/10), and
- Time the sample was collected expressed in military time (1345).

Below is an example sample label.

Client /Project		Bar Code
Sample ID		Sample ID
Subarea: Group: Location:		
Analytical Suite:		
Collected By:	Date:	Time

6.4.2 Chain-of-Custody Records

The chain-of-custody record identifying its contents will accompany all sample shipments. This record will be used to document sample custody transfer from the sampler to other sampling team members (if necessary), to the courier (if necessary), and finally to the analytical laboratory. The chain-of-custody record ensures that samples can be traced from the time of field collection until samples are received and analyzed by the analytical laboratory. The original custody record will be shipped along with the samples, and the initiator of the record retains a copy. An example chain-of-custody is included in Appendix B. The information required for the chain-of-custody record includes:

- Type of sample (grab or composite) and matrix,
- Analytical method numbers and parameter names,
- Sample number,

- Signature of sampler,
- Date and time of sample collection,
- Project name, location, and address, and
- Signatures of persons involved in the chain of possession.

When custody for a group of samples changes, each custodian will not be required to retain a copy of the chain-of-custody record as long as the original custody record indicates that each person accepting the samples has subsequently relinquished custody appropriately. The chain-of-custody record will be completed according to the following protocol:

- The originator will fill in all requested information from the sample labels.
- The originator will sign the "Relinquished by" box and keep the copy.
- The original record sheet will be shipped with the samples, in a plastic shipping envelope taped to the inside of the cooler top, and the remaining two copies of the chain-of-custody record will be filed with the representative sampling documents.
- The person receiving custody will check the sample label information against the custody record, check sample condition, and note anything atypical under the "Remarks" section on the custody form.
- The person receiving custody will sign in the adjacent "Received by" box and keep the original.
- The date/time will be the same for both signatures, because custody must be transferred between two individuals; however, when samples are shipped via common carrier (e.g., Federal Express), the date/time will not be the same for both signatures.
- When samples are shipped via common carrier, the original custody form will be shipped with the samples and the shipper (e.g., Field Sample Custodian) keeps the copy, as well as all shipping paper, bills of lading, etc.
- In all cases, it must be readily seen that the person receiving custody has relinquished it to the next custodian.
- If samples are left unattended or a person refuses to sign, this must be documented and explained on the chain-of-custody record.

6.5 SAMPLE MANAGEMENT

Samples collected in the field will be transported to the sample custody room in Building 204 where they will be logged in and prepared for shipment by the Sample Coordinator. While in Building 204, the samples will kept in a locked room when they are unattended and not in a cooler with custody seals attached.

Samples will be picked up or delivered to the designated laboratory by a common carrier such as Federal Express. Sample log-in procedures at the laboratory are included in the subcontract laboratory Quality Assurance Manual included in the QAPP for Soil Sampling (HGL, 2010a). During the field effort, the field team leader or sample coordinator will coordinate laboratory shipments. Hard-plastic ice chests provided by the laboratory will be used for shipping

samples. Samples inside the cooler must be cushioned to result in the least amount of damage from any reasonable incidents that could occur during shipping, such as a four foot drop from a truck or a tabletop. After packing is complete, the cooler will be taped shut and chain-of-custody seals will be affixed across the top and bottom joints. Each container will be clearly marked with a sticker containing the originator's address.

Soil samples are assumed to be exempt from Department of Transportation and the International Air Transport Association requirements for shipping radioactive materials. Any information obtained during sample collection or handling that indicates the presence of radioactive material should be reported to the Sample Coordinator.

The following procedures must be used when transferring samples for shipment:

- A chain-of-custody form must accompany samples. When transferring possession of samples, the individuals relinquishing and receiving must sign, date, and note the time on the record. This record documents transfer of custody of samples from the field sampler to another person or to the laboratory. When used, overnight carriers will be treated as a single entity, and a single signature will be required when samples are delivered to the laboratory.
- Samples must be properly packaged for shipment and dispatched to the appropriate laboratory for analysis with a separate signed chain-of-custody form enclosed in each sample box or cooler.
- Shipping labels should be securely attached directly to the cooler and not to a handle that can break off during shipment.
- Limit the number of soil samples in each cooler to no more than six. The total weight of a cooler should not exceed 60 pounds.

A chain-of-custody form identifying the contents will accompany all packages. The original record will accompany the shipment, and a copy will be retained at the site.

6.6 EQUIPMENT TESTING, INSPECTION AND MAINTENANCE

Preventive maintenance for most field equipment will be performed in accordance with procedures and schedules recommended in the equipment manufacturer's operating manual. However, more stringent testing, inspection, and maintenance procedures and schedules may be required when field equipment is used to make critical measurements. A field instrument that is out of order will be segregated, clearly marked, and not used until it is repaired. The field team leader will be notified of equipment malfunctions so that service can be completed quickly or substitute equipment can be obtained. When the condition of equipment is suspect, unscheduled testing, inspection, and maintenance should be conducted. Any significant problems with field equipment will be reported in the Daily Field Report.

6.7 CALIBRATION OF FIELD EQUIPMENT

Field equipment will be calibrated at the beginning of the field effort and at intervals recommended by the manufacturer or specified in the SOPs provided in Appendix A. The calibration frequency depends on the type and stability of equipment, the intended use of the equipment, and the recommendations of the manufacturer. Detailed calibration procedures for field equipment are available from the specific manufacturers' instruction manuals.

Performance checks are used periodically and after maintenance to ensure instruments continue to meet performance requirements. Examples of performance checks include tests of response time or chi-square constancy tests for radiation meters. Performance checks will be performed at intervals recommended by the manufacturer or specified in the SOPs in Appendix A.

Functional tests are used to ensure an instrument is working properly. Functional tests include checking general condition, battery life, current calibration, background, and response to an appropriate radiation source. Functional tests will be performed before and after each use of an instrument or as specified in the SOPs provided in Appendix A.

All calibration, performance check, and functional test information will be recorded in a field logbook or on field forms.

6.8 EQUIPMENT DECONTAMINATION

Equipment will be decontaminated in accordance with SOP 2.01. Personnel shall use the procedures that apply to decontamination of sampling devices used for the collection of samples for trace metals analyses where applicable. A summary of the procedures is provided below.

6.8.1 Decontamination of Large Equipment

All drilling equipment will be cleaned before and after completing each boring. This includes any portions of the drill rig that may come in contact with site soils, sampling devices, and instruments, such as slugs and sounders.

The following procedures will be used to decontaminate large pieces of equipment, such as casings, pipe and rods, and those portions of the rig that may contact site soils or groundwater:

- The external surfaces of equipment will be steam cleaned or washed with potable water and Alconox, or equivalent laboratory-grade detergent.
- If necessary, equipment will be scrubbed until all visible dirt, grime, grease, oil, loose paint, rust flakes, etc., have been removed.
- The equipment will then be rinsed with potable water.

6.8.2 Decontamination of Small Equipment

The following procedures will be used to decontaminate sampling devices that can be hand manipulated, such as core barrels, split spoons, hand augers, spades, and trowels that are not grossly contaminated:

- Scrub the equipment with a solution of potable water and Liquinox, or equivalent laboratory-grade detergent.
- Rinse thoroughly with copious quantities of potable water.
- Rinse thoroughly with organic-free water.
- If the sampling device will not be used immediately after being decontaminated, the newly decontaminated piece of equipment will be wrapped in oil-free aluminum foil, or placed in a closed plastic, stainless steel, glass, or Teflon container.

Equipment that cannot be adequately cleaned will be discarded.

6.9 INSPECTION AND ACCEPTANCE OF SUPPLIES AND CONSUMABLES

When supplies are received, the field operation leader or designee will check packing slips against purchase orders, and inspect the condition of all supplies before they are accepted for use on a project. If an item does not meet the acceptance criteria, deficiencies will be noted on the packing slip and purchase order, and the item will then be returned to the vendor for replacement or repair.

This page was intentionally left blank.

7.0 DATA EVALUATION AND REPORTING

The question being addressed by the data is whether there are radionuclide concentrations in soil that exceed their respective RTL. Therefore, laboratory analytical results and comparisons to the
RTLs define radiological contamination. Decisions reached in this radiological Study will be based on analytical results.

Data generated during the Area IV Study Area Radiological study will be managed in accordance with the data management protocols presented in Appendix D of the project Site Management Plan (HGL, 2010b).

7.1 DATA VERIFICATION

All laboratory analytical results will be verified. Data verification ensures the requirements stated in the FSP and QAPP for Soil Sampling (HGL, 2010a) are implemented as prescribed. Data verification is an integral part of the data collection process for this project. Data collection activities include self evaluations to document any changes or modifications to the FSP. Data management includes tracking the flow of information throughout the project to provide information on completeness. Once all of the data have been collected and are available for review, a checklist of required information will be provided to reviewers to ensure that all tasks have been completed as described in the FSP and QAPP for Soil Sampling (HGL, 2010a).

7.2 DATA VALIDATION

Data validation activities ensure the results of data collection activities support the objectives of the survey as documented in the QAPP for Soil Sampling (HGL, 2010a). Data validation compares the final data set with the survey objectives of the QAPP for Soil Sampling to ensure the data are usable. Data qualifiers will be applied to individual results based on the results of data validation as described in the QAPP for Soil Sampling.

7.3 DATA REPORTING

The objective of the radiological study is to determine whether radionuclide concentrations exceed RTLs. The final report will describe radionuclide concentrations which exceeded radiological screening levels and provide figures illustrating locations of contamination. In addition, a summary table will be provided showing the radionuclide exceedances, the number of sample exceedances for a particular radionuclide, and the maximum, and if applicable, mean concentrations for the exceedances.

This page was intentionally left blank.

8.0 SURVEYING

Surveying will be performed for all soil sampling locations using a Trimble GPS SPS 852 handheld controller and a Zephyr 2 antenna. Each surveyed location also will be marked with a magnetic spike. Survey data will be reported with coordinates in latitude and longitude.

In the event that it becomes necessary to achieve higher accuracy surveying than that which can be obtained using a Trimble GPS SPS 852 a Trimble Total Station will be used. In these situations horizontal and vertical survey coordinates will be measured to the nearest 0.12 inch and referenced to the 1988 North American Vertical Datum.

This page was intentionally left blank.

9.0 INVESTIGATION-DERIVED WASTE MANAGEMENT

IDW will consist largely of personal protective equipment (such as nitrile gloves and coveralls), paper towels, polyethylene sheeting, and decontamination fluids.

No soil IDW is anticipated. After sampling activities have been completed excess soil will be returned to the borehole. The void space left in the borehole will be filled with high-solids bentonite chips. The placement of the bentonite will occur as quickly as possible to minimize the possibility of contaminant migration. Protocols for the management of IDW are presented in Appendix J of the Site Management Plan (HGL, 2010b).

This page was intentionally left blank.

10.0 REFERENCES

American Society for Testing and Materials, 2005. D2488 – 06 Standard Practice for Description and Identification of Soils (Visual Manual Procedure). Developed by subcommittee D18.07.

American Society for Testing and Materials, 2006. D2487 – 06e1 Standard Practice for Classification of Soils for Engineering Purposes (Unified Classification System). Developed by subcommittee D18.07.

Bailey, T. and Jahns, R., 1954. Geology of the Transverse Ranges. Chapter 5, Geology of Southern California. California Division of Mines. Bulletin 170.

Camp, Dresser, and McKee, 2008. Draft Gap Analysis Report, submitted on June 1, 2008. Prepared for the U.S. Department of Energy.

Cherry, J., D. McWhorter, and B. Parker, 2007. Overview of the Site Conceptual Model for the Migration and Fate of Contaminants in Groundwater at the Santa Susana Field Laboratory, Simi, California. Prepared for The Boeing Company, National Aeronautics and Space Administration, U.S. Department of Energy.

HydroGeoLogic, Inc., 2009. Final Sampling and Analysis Plan, Radiological Background Study, Santa Susana Field Laboratory, Ventura County, California.

HydroGeoLogic, Inc., 2010a. Quality Assurance Project Plan for Soil Sampling, Area IV Radiological Study, Santa Susana Field Laboratory, Ventura County, California. August 31, 2010.

HydroGeoLogic, Inc., 2010b. Site Management Plan, Santa Susana Field Laboratory Area IV Radiological Study, Ventura County, California. September 24, 2010.

HydroGeoLogic, Inc., 2010c. Geophysical Investigation Plan, Santa Susana Field Laboratory Area IV Radiological Study, Ventura County, California. April 1, 2010.

HydroGeoLogic, Inc., 2011a. Final Radiological Background Study, Santa Susana Field Laboratory, Ventura County, California. October 28, 2011.

HydroGeoLogic, Inc., 2011b. Final Technical Memorandum Radiological Trigger Levels, Santa Susana Field Laboratory, Ventura County, California.

HydroGeoLogic, Inc., 2011c. Site Safety and Health Plan, Revision 01, Santa Susana Field Laboratory Area IV Radiological Study, Ventura County, California. June 6, 2011.

Montgomery Watson Harza, 2007. Geologic Characterization of the Central Santa Susana Field Laboratory, Ventura County, California, prepared for The Boeing Company, National Aeronautics and Space Administration, United States Department of Energy.

Montgomery Watson Harza, 2009. Draft Site-Wide Groundwater Remedial Investigation Report. Santa Susana Field Laboratory. Ventura County, California.

U.S. Department of Agriculture, 2003. U.S. Department of Agriculture, Natural Resources Conservation Service, National Cooperative Soil Survey, Established Series, Rev. GAW/RCH/LCL/ET,03/2003. http://www2.ftw.nrcs.usda.gov/osd/dat/S/SAUGUS.html

U.S. Environmental Protection Agency, 2010a. Aerial Photographic Analysis of Santa Susanna Field Laboratory – Area IV, Ventura County, California. Volume 1 and Volume 2, TS-PIC-20909963S/21009965S, March.

U.S. Environmental Protection Agency, 2010b. Preliminary Remediation Goals for Radionuclides Web Site. http://epa-prgs.ornl.gov/radionuclides/download.shtml

U.S. Geological Survey, U.S. Department of the Interior, 1952. Calabasas Quadrangle, California, 7.5 Minute Series (Topographic).

Yerkes, R.F., and Campbell, R.H., 2005. Preliminary Geologic Map of the Los Angeles 30´ x 60´ Quadrangle, Southern California. USGS open-file report 2005-1019.

TABLES

This page was intentionally left blank.

Table 2.1
Historical Radionuclides for Analysis Used in Background Study

Symbol	Radionuclide	Method Reference	Half-Life	Units
Alpha Spectroscopy				
Am-241	americium-241	HASL 300	432.6	Years
Am-243	americium-243	HASL 300	7,370	Years
Cm-243	curium-243	HASL 300	29.1	Years
Cm-244	curium-244	HASL 300	18.1	Years
Cm-245	curium-245	HASL 300	8,500	Years
Cm-246	curium-246	HASL 300	4,760	Years
Cm-248	curium-248	HASL 300	348,000	Years
Np-237	neptunium-237	HASL 300	2.14E+06	Years
Po-210	polonium-210	HASL 300	138.376	Days
Pu-236	plutonium-236	HASL 300	2.585	Years
Pu-238	plutonium-238	HASL 300	87.7	Years
Pu-239	plutonium-239	HASL 300	24,110	Years
Pu-240	plutonium-240	HASL 300	6,563	Years
Pu-242	plutonium-242	HASL 300	375,000	Years
Pu-244	plutonium-244	HASL 300	8.00E+07	Years
Th-228	thorium-228	HASL 300	1.9116	Years
Th-229	thorium-229	HASL 300	7,880	Years
Th-230	thorium-230	HASL 300	75,400	Years
Th-232	thorium-232	HASL 300	1.41E+10	Years
U-232	uranium-232	HASL 300	68.9	Years
U-233	uranium-233	HASL 300	1.59E+05	Years
U-234	uranium-234	HASL 300	245,500	Years
U-235	uranium-235	HASL 300	7.04E+08	Years
U-236	uranium-236	HASL 300	2.34E+07	Years
U-238	uranium-238	HASL 300	4.47E+09	Years
Gas Flow Proportional Counting				
Bi-210	bismuth-210	Eichrom	5.012	Days
Pb-210	lead-210+D	Eichrom	22.2	Years
Pm-147	promethium-147	Eichrom	2.6234	Years
Sr-90	strontium-90	Eichrom	28.8	Years
Y-90	yttrium-90	Eichrom	64.053	Hours
Gamma Spectroscopy [1]				
Ac-227	actinium-227	EPA 901.1M	21.772	Years
Ac-228	actinium-228	EPA 901.1M	6.15	Hours
Ag-108	silver-108	EPA 901.1M	2.37	Minutes
Ag-108m	silver 108m	EPA 901.1M	418	Years
Ba-133	barium-133	EPA 901.1M	10.5	Years
Ba-137m	barium-137m	EPA 901.1M	2.552	Minutes
Bi-212	bismuth-212	EPA 901.1M	60.55	Minutes
Bi-214	bismuth-214	EPA 901.1M	19.9	Minutes
Cd-113m	cadmium-113m	EPA 901.1M	14.1	Years
Cf-249	californium-249	EPA 901.1M	351	Years

Table 2.1
Historical Radionuclides for Analysis Used in Background Study

Symbol	Radionuclide	Method Reference	Half-Life	Units
Gamma Spectroscopy[1] (Continued)				
Co-60	cobalt-60	EPA 901.1M	5.275	Years
Cm-245	curium-245	EPA 901.1M	8,500	Years
Cm-246	curium-246	EPA 901.1M	4,760	Years
Cs-134	cesium-134	EPA 901.1M	2.0652	Years
Cs-137	cesium-137	EPA 901.1M	30.08	Years
Eu-152	europium-152	EPA 901.1M	13.537	Years
Eu-154	europium-154	EPA 901.1M	8.593	Years
Eu-155	europium-155	EPA 901.1M	4.753	Years
Ho-166m	holmium-166m	EPA 901.1M	1,230	Years
I-129	iodine-129	HASL-300 Gamma Low	1.57E+07	Years
K-40	potassium-40	EPA 901.1M	1.25E+09	Years
Na-22	sodium-22	EPA 901.1M	2.6027	Years
Nb-94	niobium-94	EPA 901.1M	2.03E+04	Years
Np-236	neptunium-236	EPA 901.1M	1.53E+05	Years
Np-239	neptunium-239	EPA 901.1M	2.356	Days
Pa-231	protactinium-231	EPA 901.1M	32,760	Years
Pb-212	lead-212	EPA 901.1M	10.64	Days
Pb-214	lead-214	EPA 901.1M	26.8	Minutes
Ra-226	radium-226	EPA 901.1M	1,600	Years
Ra-228	radium-228	EPA 901.1M	5.75	Years
Rn-220	radon-220	EPA 901.1M	55.6	Seconds
Rn-222	radon-222	EPA 901.1M	3.8235	Days
Sb-125	antimony-125	EPA 901.1M	2.7586	Years
Sn-126	tin-126	EPA 901.1M	2.30E+05	Years
Te-125m	tellurium-125m	EPA 901.1M	57.4	Days
Th-231	thorium-231	EPA 901.1M	25.52	Hours
Th-234	thorium-234	EPA 901.1M	24.1	Days
Tl-208	thallium-208	EPA 901.1M	3.053	Minutes
Tm-171	thulium-171	EPA 901.1M	1.92	Years
Liquid Scintillation				
C-14	carbon-14	EPA-EERF	5,700	Years
Fe-55	iron-55	HASL-300	2.737	Years
H-3	tritium (hydrogen-3), organic	EPA 906.0M (on combustate)	12.32	Years
Ni-59	nickel-59	HASL-300	76,000	Years
Ni-63	nickel-63	HASL-300	100.1	Years
Pu-241	plutonium-241	HASL-300	14.29	Years
Tc-99	technetium-99	Eichrom	211,100	Years
Removed from Program				
Be-10	beryllium-10	No method available	1.51E+06	Years
Cd-113	cadmium-113	No method available	7.70E+15	Years
Cs-135	cesium-135	No method available	2.30E+06	Years
Gd-152	gadolinium-152	No method available	1.08E+14	Years

Table 2.1
Historical Radionuclides for Analysis Used in Background Study

Symbol	Radionuclide	Method Reference	Half-Life	Units
Removed from Program (Continued)				
In-115	indium-115	No method available	4.41E+14	Years
Mo-93	molybdenum-93	No method available	4000	Years
Nb-93m	niobium-93m	No method available	16.13	Years
Pb-205	lead-205	No method available	1.73E+07	Years
Pd-107	palladium-107	No method available	6.50E+06	Years
Sm-146	samarium-146	No method available	1.03E+08	Years
Sm-147	samarium-147	No method available	1.06E+11	Years
Sm-151	samarium-151	No method available	90	Years
Sn-121	tin-121	No method available	27.03	Hours
Sn-121m	tin-121m	No method available	43.9	Years
Zr-93	zirconium-93	No method available	1.53E+06	Years
Other Analytes				
Gross Alpha Radiation	N/A	EPA 900.0	N/A	N/A
Gross Beta Radiation	N/A	EPA 900.0	N/A	N/A

Notes:

[1]Radionuclides determined by gamma spectroscopy will be reported with an applicable minimum detectable concentration (MDC). However, additional radionuclides will be reported if detected and identified with or without an applicable MDC.

N/A - not applicable

Table 2.2
Historical Extended Suite with Strikeouts

Method	Original Extended Suite
Soil Preparation	
Gamma Spec I	Ac-227, Ac-228, Ag-108, Ag-108m, Ba-133, Ba-137m, Bi-212, Bi-214, Cd-113m, Cf-249, Co-60, Cs-134, Cs-137, Eu-152, Eu-154, Eu-155, Ho-166m, K-40, Na-22, Nb-94, Np-236, Np-239, Pa-231, Pb-212, Pb-214, Rn-220, Rn-222, Sb-125, Sn-126, Te-125m, Th-234, Tl-208, and Tm-171
Gamma Spec II	Ra-226, Ra-228
LCS 3	Sr-90/Y-90
Alpha Spec 1	Am-243
Alpha Spec 2	Am-241, Cm-243, Cm-244, Cm-245, Cm-246*
Alpha Spec 3	U-233, U-234, U-235, U-236, U-238* ~~(Th-231)~~
Alpha Spec 4	Th-228, Th-230, Th-232, Th-229*
Alpha Spec 5	Np-237
~~Alpha Spec 6~~	~~U-232~~
Alpha Spec 7	Pu-236, Pu-238, Pu-239, Pu-240, Pu-244* ~~(U-240)~~
Alpha Spec 8	Pu-242
~~Alpha Spec 9~~	~~Po-210~~
LCS 1	Pm-147
~~LCS 2~~	~~Se-79~~
LCS 4	I-129
LCS 5	Tc-99
LCS 6	Ni-63, Ni-59
LCS 7	Pu-241
LCS 8	C-14
~~GPC 1~~	~~Cl-36~~
~~GPC 2~~	~~Pb-210, Bi-210~~
GPC 3	H-3
~~GPC 4~~	~~Fe-55~~

Notes:

The strikeouts represent ammendments made during a Stakeholder Meeting held on September 23, 2010.

The method names that appear on the table have changed and are kept in this document for historical record purpose only.

Table 2.3
Default and Site Specific Analytic Suites

Method	Radionuclides	Site-Specific Locations
Default Suite		
Gamma Spec Default	Ac-227, Ac-228, Ag-108m, Bi-212, Bi-214, Cd-113m, Cf-249, Co-60, Cs-134, Cs-137, Eu-152, Eu-154, Eu-155, Ho-166m, K-40, Na-22, Nb-94, Np-236, Np-239, Pa-231, Pb-212, Pb-214, Sb-125, Sn-126, Th-234, Tl-208, and Tm-171	Not Applicable
Sr-90/Y-90	Sr-90/Y-90	
Am-Cm Default	Am-241, Cm-243, Cm-244	
U Default	U-233, U-234, U-235, U-236, U-238	
Th Default	Th-228, Th-230, Th-232, Th-229	
Pu Default	Pu-238, Pu-239, Pu-240	
Site Specific Suites		
H-3	H-3	Sodium Reactor Experiment (SRE), Buildings: 4010, 4059, 4028, 4024 and at the site of the tritium groundwater plume.
C-14	C-14	SRE, reactor areas which used graphite, and some percentage of random sampling due to potential drift from C-14 which may have been used in rocket fuels.
Ni-63, Ni-59	Ni-63, Ni-59	Reactors, the Hot Lab, the burn pit, and where Co-60 is observed above background.
Tc-99	Tc-99	Reactor buildings, the Hot Lab, and the burn pit. Add a small percentage to random samples.
I-129	I-129	Hot Lab only.
Pm-147	Pm-147	Hot Lab and Former Sodium Disposal Facility only.
Ra-226 and Ra-228	Ra-226, Ra-228	Based on excursions of Bi-/Pb-214 well above background
U-232	U-232	Buildings 4003, 4055, 4093, and the Hot Lab.
Np-237	Np-237	If any default Pu isotopes are found above their RTL or LUT concentrations
Pu-241	Pu-241	If any default Pu isotopes are found above their RTL or LUT concentrations
Pu Site Specific	Pu-236, Pu-244	If any default Pu isotopes are found above their RTL or LUT concentrations
Am-Cm Site Specific	Am-243, Cm-245, Cm-246	Only where accelerators where used.

Notes:

The analytes Ag-108, Ba-133, Te-125m, Ba-137m, Rn-220, and Rn-222 were removed from the gamma spectrometry method. Barium-133 could not be resolved in the presence of naturally occuring radionuclides, Te-125m is derived from Sb-125 (and is therefore duplicative), Ba-137m is directly derived from Cs-137, likewise Ag-108 is derived from Ag-108m, Rn-220 and Rn-222 were calculated from other radionuclides. These gamma specotrometry analytes were, following the same logic, removed from the Radiological Trigger Levels (and the Lookup Table).

Table 4.1
Summary of Sample Containers, Preservatives, Sample Volumes and Holding Time Requirements

Analyte Group	Container	Minimum Sample Size	Preservative	Holding Time
C-14, H-3, I-129, and Tc-99 (soil)	One 8-oz jar	8 ounce[1]	None	None
Other radiological parameters (soil)	One gallon freezer bag (half filled)[2]	2 Liter[1]	None	None

Notes:

[1]The sample size provided is sufficient to process a single sample for all analyses; generally, an additional aliquot of equal size must be collected for each duplicate sample associated with the original sample.

[2]The half filled freezer bag should weigh at least 7 pounds.

Table 5.1
Field Equipment and Supplies

Sampling Supplies	
Sample containers	Deionized water
Sample shipping coolers	Shipping material (packaging tape, bubble wrap)
Baggies	Sampling field forms
Plastic containers	Sample labels
Alconox	Chain-of-Custody forms
Plastic spray bottles	Custody seals
Acetate liners for Geoprobe	
Sampling Equipment	
Stainless steel shovel and/or spade	GPS +/o surveying equipment
Custom sample preparation processing equipment	Custom Gamma Survey Equipment
Ludlum Model 192 Gamma Survey Logger	Geoprobe or equivalent equipment
Laptop computer	
Health and Safety	
Hard hat	Eye wash station
Safety vest	First aid kits
Safety glasses	Fire extinguishers
Hearing protection	Drinking water
Snake bite kit	Insect repellent
Communication devices (i.e. satellite radio)	Sunblock
General Field Operations	
Logbooks	Indelible ink pens
Digital camera	Paper towels
Kimwipes	Trash bags
Plastic sheeting	5-gallon buckets for decontamination
Measuring tape	Utility knives
Munsell color chart	Clear/duct tape
Brushes	

Table 6.1
Field Sampling Numbering Scheme

Subarea	Sample Identification[1, 2]	QA/QC[3]
3	8000 series	R-0001 – Equipment rinsate blank S-0001 – Source water blank
5A	3000 series	
5B	2000 series	
5C	1000 series	
5D	5000 series	
6	6000 series	
7	7000 series	
8	4000 series	
Northern Buffer Zone	9000 series	

Notes:

[1]The unique sample identification number will be associated with the assigned series of numbers.

[2]Field duplicate samples will be assigned a unique sample identification number and sent to the laboratory blind with the correct date but with a fictitious time.

[3]The rinsate and source samples will be given a unique sample identification number beginning with an "R" for a rinsate sample and "S" for a source sample.

Sample designation example:

30102 - subsurface sample collected at location 168 in Subarea 5A.

R-0001 - Equipment rinsate blank

S-0001 - Source water blank

FIGURES

This page was intentionally left blank.

Figure 1.1
Site Location Map
Santa Susana Field Laboratory

U.S. EPA Region 9

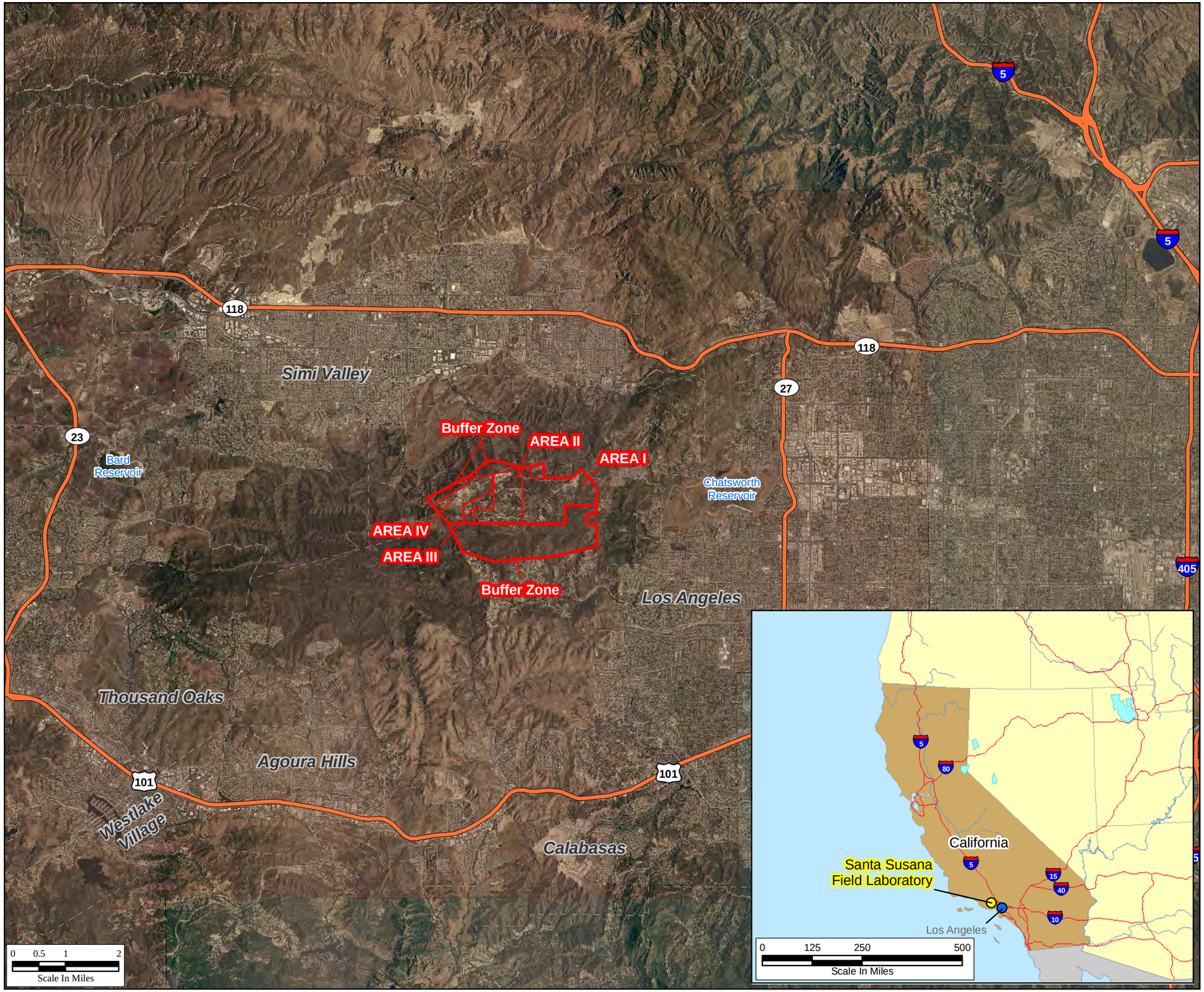

Legend

Santa Susana Field Laboratory Property Boundary

N

Filepath: X:/EPA010/Santa_Susana_Field_Lab/Maps/SAP/(1)SiteMap.mxd
Project: E10021
Created: CLimoges 20090605
Revised:
Source: CaSil, NAIP 2005

HGL HydroGeoLogic, Inc

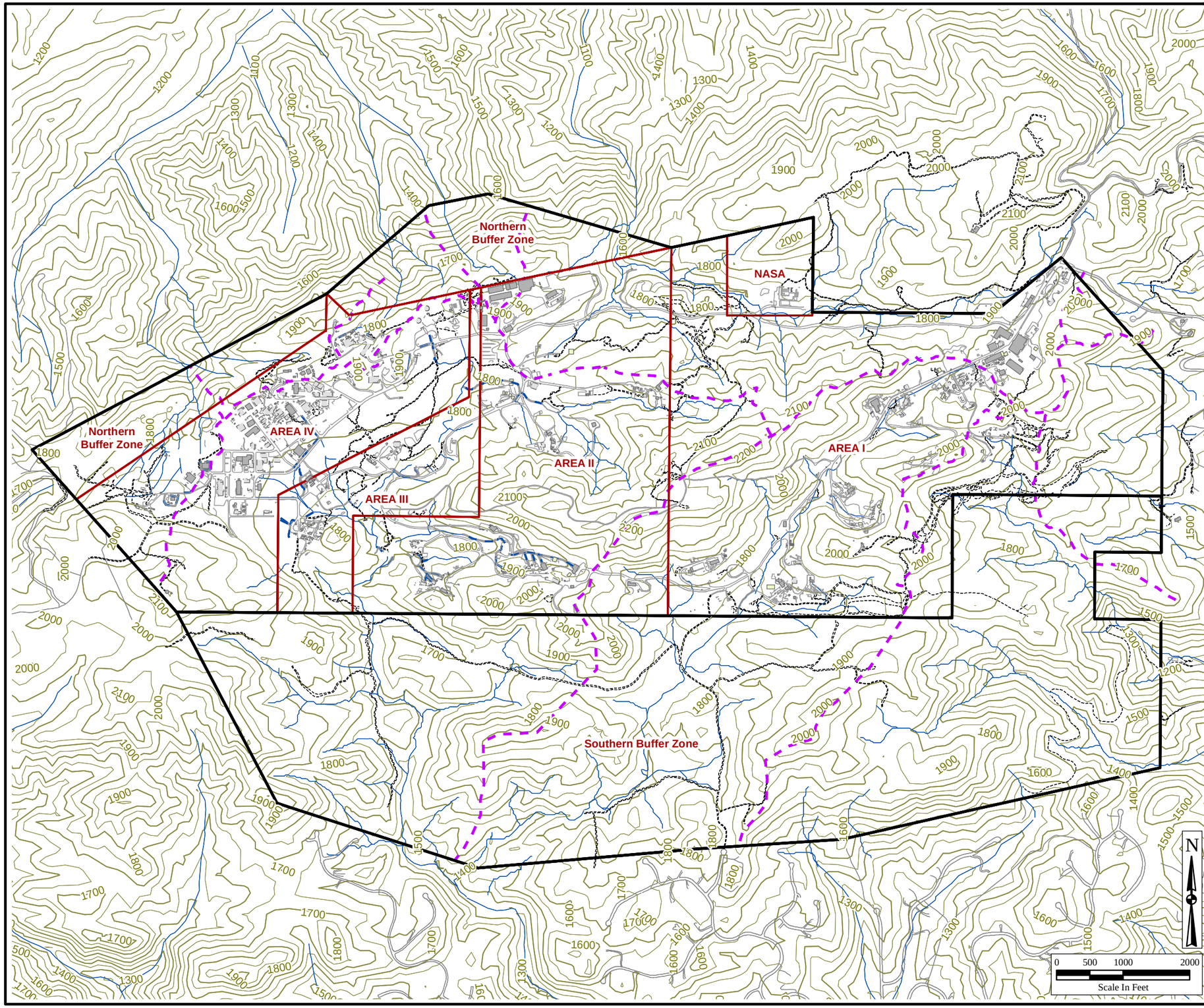

HGL—Field Sampling Plan for Soil Sampling, SSFL—Ventura County, California

Figure 2.1
Santa Susana Field Laboratory Topographic Map

U.S. EPA Region 9

Legend

- Santa Susana Field Laboratory Property Boundary
- Santa Susana Field Laboratory Administrative Areas
- Drainage Divide

Buildings

- Demolished
- Existing
- Status Unknown

Hydrology

- Lined Channel
- Unlined Channel

Roads

- Off-site Roads
- Dirt Roads

Elevation Contours

- 100' Division
- 50' Division

Filepath: Y/Santa_Susana/E10024/SoilFSP/(2-1)_Topography.mxd
Project: EP9038
Edited By: PBillock 20101001
Source: CDM Inc. (2008). Draft Gap Analysis Report, Submitted on June 1, 2008. Prepared for the U.S. Department of Energy

HGL HydroGeoLogic, Inc.

Figure 2.2
Geologic Map
Santa Susana Field Laboratory

U.S. EPA Region 9

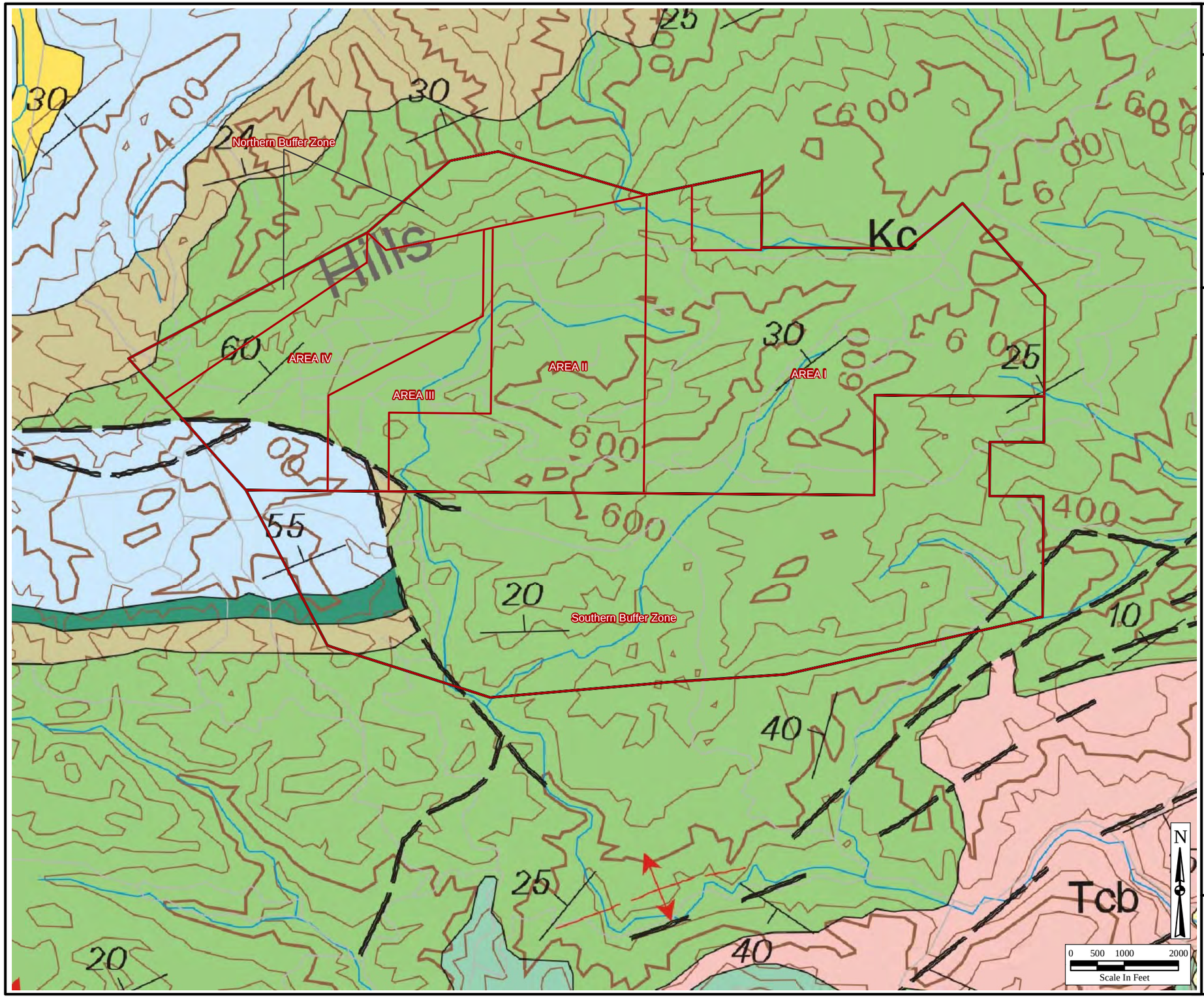

Legend

- Santa Susana Field Laboratory Property Boundary
- Administrative Boundaries at the Santa Susana Field Laboratory

Geologic Formation

- Kc — Chatsworth Formation (late Cretaceous)
- Tss — Santa Susana Formation (early Eocene to late Paleocene)
- Tlv — Las Virgenes Formation (Paleocene)
- Tsi — Simi Conglomerate, Undivided (Paleocene)
- Tcb — Calabasas Formation, Undivided (early late Miocene and late middle Miocene)
- Tm — Modelo Formation Undivided (late Miocene)
- Qof — Old alluvial-fan deposits, Undivided (late to middle Pleistocene)

Filepath: Y/Santa_Susana/EP9038/SoilFSP (2-2)_GeologicMap_SoilFSP.mxd
Project: EP9038
Created: CLimoges 20091111
Revised: CLimoges 20100208
Source: Preliminary Geologic Map of the Los Angeles 30´ x 60´ Quadrangle, Southern California; Yerkes and Campbell; 2005

HGL HydroGeoLogic, Inc

APPENDIX A

STANDARD OPERATING PROCEDURES

FOP 1.10	Use of the In Situ Gamma Spectrometer
SOP 1.56	Use of a Nuclear Density Gauge
SOP 2.01	Cleaning & Decontaminating Sample Containers and Sampling Equipment
SOP 4.01	Documentation – Field Activity Reports
SOP 4.07	Use and Maintenance of Field Log Books
SOP 16	Surface and Shallow Depth Soil Sampling
SOP 24	Geologic Borehole Logging
SOP 27	Basic Geoprobe Operations
SOP 36	Borehole Gamma Logging

This page was intentionally left blank.

HGL
HydroGeoLogic, Inc

SSFL FIELD OPERATING PROCEDURE 1.10

Use of the In Situ Gamma Spectrometer

Author: _____ Date: 11/3/11

Bryan Mason,
Assistant Radiation Safety Officer

Approved by: _____ Date: 11/03/11

Shannon Thompson, Ph.D.
Radiation Safety Officer

Approved by: _____ Date: 11/15/11

Steven Vaughn, R.G.
SSFL Project Manager

This page was intentionally left blank.

1.0 PURPOSE

This procedure details the approach for collecting in situ measurements using a high-purity germanium (HPGe) gamma detector to investigate the potential presence of gamma radiation anomalies in surface soil and, to a limited degree, subsurface soil. In situ gamma spectrometers are capable of identifying photon-emitting radionuclides in the field as part of the Area IV Radiological Study at the Santa Susana Field Laboratory (SSFL). Deviations from the methods presented herein must be approved by the Radiation Safety Officer (RSO).

1.1 SCOPE AND APPLICATION

This procedure describes the techniques used to perform in situ measurements of potential gamma radiation anomalies or other measurement applications as desired. The detector uses Canberra's Inspector hardware and Genie 2K gamma spectroscopy software. The purpose of the in situ measurements is to identify photon-emitting radionuclides and provide an estimate of average radionuclide concentrations over relatively large areas wherein elevated levels of gamma radiation may have been identified previously by gamma scanning.

This procedure is applicable to in situ gamma spectrometers using Canberra hardware and software to perform measurements of gamma radiation. In situ gamma measurements are used to identify and possibly quantify gamma anomalies and other areas of interest.

1.2 DEFINITIONS AND ABBREVIATIONS

Assistant Radiation Safety Officer (ARSO) - One of two individuals responsible for ensuring that this procedure is implemented. When the RSO is not available, the ARSO will act as the RSO's representative for radiological issues. The ARSO and RSO have key radiological oversight, training, and safety responsibilities for the SSFL Area IV Radiological Study.

Contamination - Deposition of radioactive material in any place where it is not desired. Contamination may be due to the presence of alpha particle, beta particle or gamma ray emitting radionuclides. Contamination may be surface or volumetric and may be removable or fixed.

High-Purity Germanium Detector (HPGe) – A semiconductor diode operated under high voltage that is sensitive to ionizing radiation, particularly x-rays and gamma rays. The detector requires cooling with liquid nitrogen to operate.

Multi-Channel Analyzer (MCA) – Specialized electronics used in spectroscopy to shape electronic pulses from the detector preamplifier, convert the pulses to a digital signal, and sort the pulses by energy and assign them to different channels.

Personal Protective Equipment (PPE) – Specialized clothing and/or equipment worn for protection against health and safety hazards. In addition to face shields, safety glasses, hard hats, and safety shoes, PPE can include a variety of devices and garments such as goggles, coveralls, gloves, vests, earplugs, and respirators.

Radiation Safety Officer – An individual responsible for verifying that personnel comply with this procedure and are trained in the use of survey meters used for this procedure. The RSO or ARSO may enter into the field or provide communication support, depending on the situation. Alternatively, one may remain in place for communications and the other may enter the field.

Radioactive material - Is literally a mass or collection of radioactive atoms. The term applies to any material, regardless of form and type(s) of radioactivity that spontaneously emits ionizing radiation. It is also any item determined to be contaminated or suspected of contamination.

Radiological Work Permit (RWP) - An authorization to conduct work involving exposure to radiation or radioactive materials that identifies radiological conditions, establishes worker protection and monitoring requirements, and contains specific approvals.

Surveyor - An individual designated by the RSO to evaluate materials or items for radiological characterization and to perform decontamination techniques as necessary.

1.3 GENERAL

Work will be performed consistent with Occupational Safety and Health Administration established standards and requirements and the project Site Safety and Health Plan (SSHP) (HGL, 2010).

The in situ gamma spectroscopy system consists of an HPGe detector attached to a liquid nitrogen dewar, a Canberra InSpector 2000 MCA, portable computer with Canberra Genie 2000 applications software, and an electrical cable connecting the detector to the MCA. The detector is not shielded and is mounted on a tripod at a height of 30 centimeters above the ground. The equipment is designed for use in the field and requires knowledge of handling and positioning the detector, as well as operation of the nuclide identification software, to obtain results that meet the project objectives. Analysis of data requires experience analyzing and interpreting gamma ray spectra. Typically, the data are collected in the field, subsequently analyzed on a desktop computer, and hardcopy reports printed in the office. However, the complete data collection and analysis can be performed in the field.

1.4 INTERFERENCES AND POTENTIAL HAZARDS

- When working in areas where there is a possibility of contamination from radioactive materials, use PPE, such as rubber boots, rubber gloves, overalls, etc., as required. Refer to the SSHP (HGL, 2010) for procedures and guidance on the use of PPE. Refer to the appropriate RWP for task-specific PPE requirements.
- The in situ gamma spectrometer is cooled with liquid nitrogen to reduce reverse current and improve resolution. Liquid nitrogen can cause serious burns or damage to skin or other unprotected tissues and should be handled with care.
- Operation of the in situ gamma spectrometer and handling of liquid nitrogen requires specialized training and will only be performed by qualified personnel.
- Radioactive check sources used in this procedure should be handled with care to prevent damage to the source. Sources are limited quantities not requiring a radioactive materials license and are not harmful if used properly.

1.5 ROLES AND RESPONSIBILITIES

The surveyors are responsible for ensuring that quality control tests have been completed prior to using the detection systems. The RSO or ARSO is responsible for verifying personnel comply with this procedure, verifying that work performance is satisfactory. The field supervisor and Site Safety and Health Officer whom oversee field survey staff, are responsible for ensuring that gamma scanning activities are conducted safely and in accordance with other field compliance issues (e.g., safety, biological, historical, or physical considerations).

2.0 INSTRUCTIONS

2.1 EQUIPMENT

- In situ gamma spectrometer with attached dewar
- InSpector 2000
- Tripod, with detachable legs
- Electronics cable (connects detector to MCA)
- USB cable (connects MCA to computer)
- Portable power supply (e.g., battery and power inverter)
- Laptop computer with Genie 2000 software
- Liquid nitrogen
- Cryogenic hose
- Faceshield and cryogenic gloves (for handling liquid nitrogen)

2.2 START UP

- Verify that equipment has had a Daily Quality Control Check performed in accordance with FOP 2.10 “Quality Control for the In Situ Gamma Spectrometer”.
- Physical Integrity – visually inspect the equipment and verify the unit is clean with no visible damage.
- Battery Charge – verify the power supply is fully charged.

- Verify the dewar has been filled with liquid nitrogen within the past 24 hours. If the dewar was filled within the past 60 hours but not in the past 24 hours, fill the dewar with liquid nitrogen. If the dewar has not been filled in the past 60 hours allow the detector to reach room temperature, fill the dewar with liquid nitrogen, and wait at least 6 hours for the detector to completely cool.
- *Note that the dewar is usually filled at the end of each day of use following the end of days quality control checks as long as additional measurements are planned during the next few days. If the detector is kept cold over a weekend it should be filled as late as possible on Friday and as early as possible on Monday. The maximum time between fillings is 72 hours.*

2.3 IN SITU MEASUREMENT

- Position the detector over the surface to be measured. The tripod legs should be completely retracted, such that the detector – surface distance is approximately 30 centimeters.
- Adjust the length of the tripod legs if necessary to stabilize the detector. The detector should be positioned as close to level as practical based on the terrain.
- Attach the electronic cable to the InSpector if it is not already attached.
- Attach the electronic cable to the preamplifier on the detector:
  - Attach the green high voltage interrupt connector first, twist the connector until it is set.
  - Attach the red signal connector and black high voltage connector; twist the connectors until they are set.
  - Attach the multi-pin serial connector; use the clips on the side to secure the connector in place.
- Attach the universal serial bus (USB) cable to the InSpector.
- Attach the USB cable to the computer.
- Connect the InSpector and the computer to the power supply.
- Turn on the InSpector.
- Turn on the computer.
- Start the Genie 2000 software.
- Select FILE, OPEN DATASOURCE. Choose DETECTOR, select DET03, DET02, or another detector name as appropriate and click OPEN.
- Agree to accept any questionable data if asked.
- Select MCA, ADJUST to open the MCA control panel. Select the HVPS tab, under STATUS select ON. The voltage will be applied at a rate of approximately 100 volts per second to reach the operating voltage of 5,000 volts. While voltage is being applied the word WAIT will show in the upper left corner of the MCA control panel. When WAIT is no longer visible the detector is ready to use.

- Select MCA, ACQUIRE SETUP. Set the LIVE TIME to 1,200 seconds. All in situ measurements will be performed for 1,200 seconds unless otherwise directed by the RSO.
- Close the ACQUIRE SETUP window.
- Press CLEAR on the left side of the spectrum window to remove any old data. Press START to begin data collection. The live time and preset time are shown above the spectrum window to track the progress of the count.
- When the preset live time is reached data collection will stop.
- Place the GPS antenna on top of the detector. Record the latitude and longitude for the measurement location.
- While the data is being collected select EDIT, SAMPLE INFO to open the sample information window. Enter the information for the measurement being collected including the latitude and longitude.
- When the measurement is completed, select FILE, SAVE AS and navigate to the C:\GENIE2K\CAMFILES\SSFL folder. Enter a unique measurement filename such as PGRAY07-1 and click SAVE.

2.4 SHUTDOWN

Shut the detector down prior to moving or repositioning the detector more than 5 feet or on uneven terrain to prevent damage to energized portions of the detector.

- Select MCA, ADJUST to open the MCA control panel. Select the HVPS tab, under STATUS select OFF. The voltage will be removed at a rate of approximately 100 volts per second. While voltage is being removed the word WAIT will show in the upper left corner of the MCA control panel. When WAIT is no longer visible the detector is shut down.
- Select FILE, CLOSE to close the detector. Do not save any changes made to the detector.
- Turn off the InSpector. If no other counts will be performed turn off the computer.
- Disconnect the electronics cable from the detector preamplifier:
  - Unclip the serial connector and gently remove the connector.
  - Twist the high voltage and red signal connectors and gently remove the connectors.
  - Finally, twist the green high voltage interrupt connector and gently remove the connector.

3.0 RECORDS

The Field Team Leader or designee shall check the field log books for completeness and accuracy. Any discrepancies in these documents will be noted and returned to the originator for correction. The reviewer will acknowledge that corrections have been incorporated by signing and dating in the appropriate manner. Field log entries will be recorded in a form of long-term documentation.

Data files from C:\GENIE2K\CAMFILES\SSFL will be uploaded to \\ca-srv-01\Projects\Task Order 0038_SSFL\Project Data\Gamma Scanning\Data\INSITU\SSFL.

4.0 REFERENCES

HydroGeoLogic, Inc., 2010. Site Safety and Health Plan, Santa Susana Field Laboratory Area IV Radiological Study, Ventura County, California. April, 2010

Manufacturer Manuals

Genie 2000 Operations Manual

STANDARD OPERATING PROCEDURE 1.56

USE OF A NUCLEAR DENSITY GAUGE

STANDARD OPERATING PROCEDURE 1.56

USE OF A NUCLEAR DENSITY GAUGE

1.0 PURPOSE

The purpose of this SOP is to provide guidance for the use of nuclear density gauges on HGL (HGL) projects. By providing this guidance, we expect that accidents and exposures resulting from the use of the nuclear density gauge will be prevented.

2.0 DISCUSSION

Soil density testing may be conducted using a nuclear density gauge. A nuclear density gauge is an electronic instrument, which uses a small amount of radioactive material to measure the density and moisture of construction materials. The Cesium-137 (Cs-137) source capsule is in a threaded holder adhered to the base of the gauge. The Americium-241/Be (Am-241) source is within the gauge and cannot be reached without disassembly of the gauge.

The radioactive material used in the gauge is in a dual sealed source capsule. This means it is inside of two stainless steel capsules, which are sealed by welding. There is little possibility that the radioactive material will escape. Current source construction techniques are to deposit the Cesium-137 into a ceramic material and fire it. If a source constructed in this manner is breached, the radioactive material may break or chip, but it would not be in a dust form. The use of a ceramic binder would compromise the intimacy of the Americium-Beryllium mixture so the Am-241/Be is pressed into a pellet.

3.0 PROCEDURE

All use of nuclear density gauges by HGL or subcontractor personnel must be performed in compliance with the following minimum requirements. Subcontractors shall work under the provisions of their own written programs and procedures. Only authorized users may operate the density gauge.

- An authorized user has been properly trained on the use of the device and the hazards of radiation, and who has been so designated by the subcontractor's Radiation Safety Officer (RSO).
- Authorized users must carry a letter of designation from the RSO.

The RSO shall be notified of the planned use of the gauge at least two weeks prior to gauge use so that state nuclear license reciprocity arrangement may be made for use of the gauge on a federal facility.

HGL will make sure that the Radiological Health Branch of the State Department of Health Services is notified regarding the transfer of gauges, and will maintain all records as required by the license and the regulations.

If a subcontractor uses of a nuclear density gauge or other instrument with a radioactive source, the subcontractor must provide a copy of his/her license to HGL.

- If the device is to be used at a federal site, the subcontractor must prove his/her ability to operate the nuclear density or other instrument on property with exclusive federal jurisdiction.
- This shall include proof of current reciprocity with the U.S. Nuclear Regulatory Commission.

The HGL Site Safety and Health Officer will assure that gauges are stored and secured in an appropriate area. The HGL Site Safety and Health Officer will assure that gauges are stored and secured in an appropriate area. All HGL employee use of the nuclear density gauge shall be in compliance with HGL Radiation Safety Procedure, and each user shall have read and reviewed a copy of this procedure.

- At no time is the operator to leave the equipment unattended while out of its storage case, or in the possession of an unauthorized person.
- Keep all unauthorized persons out of the immediate operating area (at least 5 feet away).
- The operator must verify that the gauge has had leak test measurements at the proper interval.
- When not being used for field measurements the gauge will be placed in the “SAFE” position and returned to its storage case.
- When using the gauge the operator will wear the personal monitoring device (radiation dosimeter) assigned.
- When the operator is not using the gauge, the monitoring device will be kept in a low background, low heat area.
- During transportation the gauge shall be fully secured in the transporting vehicle and located away from personnel.
    - When transported in a closed vehicle (car or van), the case will be locked and the vehicle will be locked when the operator is not with the vehicle.
    - When transported in an open bed vehicle (pickup truck), the case will be locked and the case securely fastened and locked to the truck bed when the operator is not with the vehicle.

- The gauge will only be transported in an approved DOT shipping container with all the required labels and marking.
- The authorized user will inspect the shipping case to assure that it is physically sound and that all closure devices (hinges, hasps, latches, etc.) are properly installed, secured and free of defects.

- No one shall attempt to repair modify or open the sealed source under any circumstances.
- The operator shall examine the integrity of the shutter of the gauge prior to use. If shutter integrity is in question, notify the RSO, and do not operate the gauge.
- When field-testing is complete the gauge will be returned to its place of storage as soon as possible.
- At all times, operators will observe as low as reasonably achievable (ALARA) principles to minimize any dose received. This may include: being near the equipment only when necessary, standing away from the equipment when possible during operation, and always having the base pointed away from the body.

The following documents will be with the equipment storage case at all times (except as required during transport of the gauge):

- Copy of the license,
- Copy of the authorization letter/card from RSO,
- Copy of the gauge operations manual,
- Copy of the current leak test certificate,
- Copy of the current transit case certificate.

All personnel using the gauges will be assigned a personal monitoring device (dosimeter). These will be either a film badge, which is exchanged monthly, or a thermoluminescent dosimeter, which is, exchanged quarterly.

- The badge will be returned to the subcontractor's RSO at the designated time.
- Badge loss must be reported immediately and supported by a memo to the appropriate RSO, which includes the date of incident, the persons involved, a description of the incident, and measures taken to prevent a reoccurrence.

All radioactive material/equipment will be stored in the designated area only. Equipment will be locked in its case while not in use. The storage area will be locked at all times and key access is authorized for operators only. Regulation requires that the storage area have the following:

- A storage locker or separate room with a minimum of 10 feet from any permanent workstation;
- Security against unauthorized removal with key/combination lock control.

- Signs posted which state: "CAUTION RADIOACTIVE MATERIAL"
- Notice to Employees (Form RH-2364) if in California.
- A notice of where a copy of the License, Radiation Safety Plan, and Nuclear Regulatory Commission requirements may be viewed.
- An area that includes a circuit for charging equipment.

While in transit, the following requirements must be followed:

- While in-transit involving over-night storage, the case should be covered so it is not visible from outside the vehicle while the operator is not present.
- If appropriate, the gauge should be chain locked in its case to the steering wheel in the cab of the truck.

Any incident involving potential dispersal of radioactive material, theft or loss of the gauge must be immediately reported to the HGL Site Health and Safety Officer and subcontractor's RSO as appropriate.

STANDARD OPERATING PROCEDURE 2.01

CLEANING AND DECONTAMINATING SAMPLE CONTAINERS AND SAMPLING EQUIPMENT

STANDARD OPERATING PROCEDURE 2.01

CLEANING AND DECONTAMINATING SAMPLE CONTAINERS AND SAMPLING EQUIPMENT

1.0 PURPOSE

The purpose of this procedure is to describe decontamination methods and related issues involving the physical removal of chemical and radioactive contaminants from sample containers and sampling equipment.

2.0 SCOPE AND APPLICATION

This procedure provides general guidelines for the decontamination of the surfaces of sample containers and equipment that come in direct contact with actual samples during sample collection and processing in order to prevent or reduce cross-contamination. The prevention or minimization of cross-contamination in sampled media is critical in avoiding the introduction of error into sampling results and for ensuring the health and safety of site personnel.

Eliminating or neutralizing contaminants that have accumulated on sampling equipment ensures protection of personnel from permeating substances, reduces or eliminates transfer of contaminants to clean areas, prevents the mixing of incompatible substances, and minimizes the likelihood of sample cross-contamination.

2.1 DEFINITIONS

Deionized Water: Tap water treated by passing through a standard deionizing resin column. The deionized water should contain no heavy metals or other inorganic compounds (i.e., at or above analytical detection limits) as defined by a standard Inductively Coupled Argon Plasma Spectrophotometer scan.

Equipment: Those items (variously referred to a "field equipment" or "sample equipment") necessary for sampling activities that do not directly contact the samples.

Laboratory Detergent: A standard brand of phosphate-free laboratory detergent, such as Liquinox, or the equivalent.

Organic-free Water: Tap water treated with activated carbon and deionizing units or water from a Milli-Q system (or equivalent). This water should not contain pesticides, herbicides, extractable organic compounds, and less than 50 micrograms per liter (µg/L) of purgeable organic compounds as measured by a low-level gas chromatography/mass spectrometry (GC/MS) scan. Organic-free water should be stored only in glass or Teflon containers and dispensed from only glass, Teflon, or stainless steel containers.

Sampling Devices: Utensils and other implements used for sample collection and processing that directly contact actual samples.

10 percent nitric acid: A solution composed of 1 part concentrated nitric acid and 9 parts distilled water (e.g., a 100 ml aliquot of 10 percent nitric acid contains 10 ml concentrated nitric acid and 90 ml distilled water).

Solvent: Pesticide-grade methanol is the standard solvent used for decontamination in most instances. The use of any other solvent must be justified and approved by the responsible project personnel and documented on the Daily Field Report Forms or in the field logbooks.

Tap Water: This refers to tap water from a tested and approved water system.

3.0 GENERAL

- All work will be performed in a manner that is consistent with Occupational Safety and Health Administration (OSHA) established standards and requirements.
- Any deviations from specified requirements will be justified to and authorized by the Project Manager (PM) or the relevant Program Manager, and should be documented on the appropriate field change forms.
- Deviations from requirements will be sufficiently documented to allow re-creation of the modified process.
- Refer to the site- or project-specific HSP for relevant H&S requirements.
- Refer to the Work Plan (WP) for project/task-specific sampling and analysis requirements.
- Personnel who use this procedure must provide documented evidence of having been trained in the procedure to the Program Manager or PM for transmittal to the Project File.
- The objectives of decontamination are: to remove contamination from contaminated surfaces; to minimize the spread of contamination to uncontaminated surfaces; to avoid any cross-contamination of samples; and to minimize personnel exposures. The intent is to accomplish the required level of decontamination while minimizing the generation of additional solid and liquid waste.
- As a minimum, nitrile or equivalent gloves will be worn while decontaminating equipment. Safety glasses or goggles, uncoated Tyvek coveralls, laboratory coat, or splash apron will be worn if justified by contaminant concentration and potential adverse effects. Face shield, heavy-duty polyvinyl chloride (PVC) or equivalent gloves, coated Tyvek or equivalent coveralls will be worn while cleaning with steam or high temperature water. Ground fault circuit interrupters will be used to supply power to any portable electrical equipment in the equipment decontamination area. Solvent rinsing will be conducted in an open, well-ventilated area or under a fume hood. No eating, smoking, drinking, chewing, or hand to mouth contact

will be permitted during decontamination activities. A fifteen-minute eyewash will be available within 100 feet if corrosive (concentrated acids or bases) decontamination fluids are used.

- Refer to the WP for project specific decontamination methods and schedules.
- Procedures for packaging and disposal of all waste generated during field activities will be described in the WP.
- Decontamination of sampling devices will be performed in a designated decontamination area, removed from any sampling location. This designated area must also be in a location free of direct exposure to airborne and radiological surface contaminants.
- Decontamination activities will be conducted downwind of the location where clean field equipment, clean sample devices, and sample containers are stored.
- Contaminated or dirty sampling devices/sample containers are not stored with clean (decontaminated) sampling devices/sample containers.
- Sample containers and sampling devices are segregated from all other equipment and supplies.
- Paint or any other coatings must be removed from any part of a sampling device which may either contact a sample or which may otherwise affect sample integrity. After removal of such coatings, the sampling device will then require decontamination by the appropriate method.
- The brushes used to clean sampling devices must not be of the wire-wrapped type.
- For any of the specific decontamination methods that may be used, the substitution of higher-grade water is permitted (e.g., the use of organic-free water in place of deionized water). However, it must be noted that deionized water and organic-free water are less effective than tap water in rinsing away the detergent during the initial rinse.
- Decontaminated sampling devices and all filled and empty sample containers will be stored in locations that are protected from exposure to any contaminant.
- The method for decontamination of sampling devices and the exterior of sample containers that have been exposed to radioactive material is based on the material contaminated, the sample medium, the radiation levels, and the specific radionuclides to be removed.
- In reference to decontaminated sampling devices and sample containers, their release for unrestricted use is based on site-specific criteria. These site-specific criteria should be found in the project work plans.
- Rags used during decontamination may become a hazardous waste and require segregation. Refer to the project work plans for hazardous waste requirements.

4.0 INTERFERENCES AND POTENTIAL HAZARDS

- The use of distilled/deionized water commonly available from commercial vendors may be acceptable for decontamination of sampling equipment provided that it has been verified by laboratory analysis to be analyte free.

- An untreated potable water supply is not an acceptable substitute for tap water. Tap water may be used from any municipal water system for mixing of decontamination solutions.
- Acids and solvents utilized in the decontamination sequence pose the health and safety risks of inhalation or skin contact, and raise shipping concerns of permeation or degradation.
- The site work plan must address disposal of the spent decontamination solutions.
- Several procedures can be established to minimize contact with waste and the potential for contamination. For example:
    - Stress work practices that minimize contact with hazardous substances.
    - Use remote sampling, handling, and container-opening techniques when appropriate.
    - Cover monitoring and sampling equipment with protective material to minimize contamination.
    - Use disposable outer garments and disposable sampling equipment when appropriate.

5.0 EQUIPMENT/APPARATUS

- appropriate personal protective clothing
- non-phosphate detergent
- selected solvents
- long-handled brushes
- drop cloths/plastic sheeting
- trash container
- paper towels
- galvanized tubs or buckets
- tap water
- distilled/deionized water
- metal/plastic containers for storage and disposal of contaminated wash solutions
- pressurized sprayers for tap and deionized/distilled water
- sprayers for solvents
- trash bags
- aluminum foil
- safety glasses or splash shield
- emergency eyewash bottle

6.0 REAGENTS

- isopropanol (pesticide grade)
- nitric acid (10%)

7.0 CALCULATIONS

This section is not applicable to this SOP

8.0 PROCEDURES

Decontamination Schedules

- Sampling devices must be decontaminated prior to being used in the field, in order to prevent potential contamination of a sample.
- Sampling devices must be decontaminated between samples to prevent cross-contamination.
- Sampling devices must be decontaminated at the close of the sampling event prior to being taken off-site.
- All personnel leaving the contaminated area of a site must be decontaminated.
- An acceptable alternative to cleaning and decontaminating sampling devices is the use of items cleaned or sterilized by the manufacturer that are discarded after use. Care must be exercised to ensure such previously cleaned or sterilized items do not retain residues of chemical or radioactive sterilizing agents that might interfere with analytical techniques.
- Whenever visible dirt, droplets of liquid, stains, or other extraneous materials are detected on the exterior of a sample container, the exterior surfaces must be decontaminated. This should be done before placing in a sample cooler or shipping container.
- For sample containers used in controlled access areas, a more rigorous cleaning and/or radiation monitoring may be required before removal from the site. Refer to the project-specific work plan for details.

Decontamination Methods

The following decontamination methods are examples of some of those most commonly used in field investigations. Note that the decontamination methods described in this section are for guidance only; the Field Operations Manager will adjust decontamination practices to fit the sampling situation and applicable requirements.

- Decontaminating the Exterior of Sample Containers in Use
    - Wipe the exterior surfaces of the sample container with disposable rags/ toweling, or rinse with deionized water.
    - If rinsing with deionized water, then the exterior of the sample container must be wiped dry with disposable rags/toweling, or allowed to air dry.
    - All visible dirt, droplets of liquid, or other extraneous materials must be removed.

- For containers used in controlled access areas or where the sample media is difficult to remove (e.g., sludge), a more rigorous cleaning and/or radiation monitoring may be required. Refer to the project-, task-, or site-specific WP for details.
- This decontamination procedure will be performed at the sample location before placing the sample container in the sample cooler or shipping container.

- Decontaminating Stainless Steel, Teflon, or Metal Sampling Devices Used to Collect Samples for Radiological Analyses
  - Clean with a tap water and laboratory detergent solution. Use phosphate-free detergent, such as Liquinox®, or equivalent. Use a brush to remove particulate matter and surface film.
  - Rinse thoroughly with potable or tap water.
  - Rinse thoroughly with organic free water
  - If the sampling device will not be used immediately after being decontaminated, the newly decontaminated piece of equipment will be wrapped in oil-free aluminum foil (with shiny side facing outward), or placed in a closed plastic, stainless steel, glass, or Teflon container.
  - Note: When a sampling device is used to collect samples of hard to remove materials, it may be necessary to rinse the device several times with an approved solvent (one which meets the requirements of the WP) before initiating decontamination. In extreme cases it may be necessary to steam clean, brush, or sandblast the sampling device prior to using this decontamination method. If the sampling device cannot be adequately cleaned utilizing the above means, it must be discarded.
- Decontaminating Stainless Steel, Teflon, or Metal Sampling Devices Used to Collect Samples for Trace Organic Compounds and /or Metals Analyses
  - Clean with a tap water and laboratory detergent solution. Use phosphate-free detergent, such as Liquinox®, or equivalent. Use a brush to remove particulate matter and surface film.
  - Rinse thoroughly with organic-free water.
  - Rinse with 10% nitric acid
  - Rinse with organic free water
  - Rinse twice with solvent (pesticide-grade methanol).
  - Allow to air dry for 24 hours, if possible.
  - If it is not possible to air dry for 24 hours, then rinse twice with organic-free water and allow to air dry as long as possible.
  - Wrap sampling devices with aluminum foil (with shiny side facing outward). This is done to prevent contamination during storage and/or transport to the field.

- Note: When a sampling device is used to collect samples that contain oil, grease, or other hard to remove materials, it may be necessary to rinse the device several times with an approved solvent (one which meets the requirements of the WP) before initiating decontamination. In extreme cases it may be necessary to steam clean, brush, or sandblast the sampling device prior to using this decontamination method. If the sampling device cannot be adequately cleaned utilizing the above means, it must be discarded.

- Decontaminating Glass Sampling Devices Used for the Collection of Samples for Trace Organic Compounds and/or Metals Analyses
  - Glass sampling devices will be washed thoroughly with laboratory detergent and hot water using a brush to remove any particulate matter or surface film.
  - Rinse thoroughly with hot tap water.
  - Rinse thoroughly with tap water.
  - Rinse twice with solvent and allow to air dry for at least 24 hours, if possible.
  - Wrap with aluminum foil (with shiny side facing outward). This is done to prevent contamination during storage and/or transport to the field.

Note: When a sampling device is used to collect samples that contain oil, grease, or other hard to remove materials, it may be necessary to rinse the device several times with an approved solvent (one which meets the requirements of the WP) before initiating decontamination. In extreme cases it may be necessary to steam clean, brush, or sandblast the sampling device prior to using this decontamination method. If the sampling device cannot be adequately cleaned utilizing the above means, it must be discarded.

Quality Control

- The quality of the deionized and organic-free water used may be monitored by collecting samples in standard precleaned sample containers and submitting them to the laboratory for a standard inductively coupled plasma (ICP) scan. Organic-free water should be submitted for low-level pesticide, herbicide, extractable, or purgeable compounds analyses, as appropriate.
- Effectiveness of the decontamination procedures is monitored by submitting a rinseate blank to the laboratory for low-level analysis of the parameters of interest. A rinseate blank consists of a sample of analyte-free water which is passed over and through a field decontaminated sampling device and placed in a clean sample container. An attempt should be made to select different sampling devices, each time devices are washed, so that a representative sampling of all devices is obtained over the length of the project. Rinseate blanks should be run for all parameters at a rate of 1 per day for each parameter, even if samples are not shipped that day. Note on the Daily Field Report Forms or in the field logbooks the devices being used for the quality control (QC) rinsate.

9.0 DATA VALIDATION

This section is not applicable to this SOP

10.0 HEALTH AND SAFETY

When working with potentially hazardous materials, follow U.S. EPA, OSHA, and specific health and safety procedures.

Decontamination can pose hazards under certain circumstances even though performed to protect health and safety. Hazardous substances may be incompatible with decontamination methods. For example, the decontamination solution or solvent may react with contaminants to produce heat, explosion, or toxic products. Decontamination methods may be incompatible with clothing or equipment; some solvents can permeate or degrade protective clothing. Also, decontamination solutions and solvents may pose a direct health hazard to workers through inhalation or skin contact, or if they combust.

11.0 RECORDS

Documentation generated as a result of this procedure is collected and maintained in accordance with requirements specified in the WP.

7.0 ATTACHMENTS

Below is Attachment A, Field Checklist

ATTACHMENT A
FIELD CHECKLIST

_____ Daily Field Report Forms or Field Logbooks
_____ Safety Glasses or Mono-goggles
_____ Black, Indelible Pen
_____ Decontamination Equipment
_____ Work Plan
_____ Appropriate Containers for Waste and Equipment
_____ Gloves
_____ Safety Shoes
_____ Plastic Sheets
_____ Health and Safety Plan
_____ Monitoring Instruments

Table 1: Recommended Solvent Rinse for Soluble Contaminants

SOLVENT	SOLUBLE CONTAMINANTS

STANDARD OPERATING PROCEDURE 4.01

DOCUMENTATION - FIELD ACTIVITY REPORTS

STANDARD OPERATING PROCEDURE 4.01

DOCUMENTATION - FIELD ACTIVITY REPORTS

1.0 PURPOSE

The purpose of this SOP is to provide guidance in the preparation of field activity reports. In providing this guidance it is expected that meaningful reports will be written and contribute to the overall effectiveness of our operation.

2.0 DISCUSSION

All HGL projects will require the generation of field activity reports on a daily basis by numerous personnel on site. It is the intent of this SOP to provide some basic items and topics of concern that should be addressed or included in each report

3.0 PROCEDURES

The following procedure shall serve as a basic guideline in the preparation of a daily field activity report:

- The daily field activities should be recorded on a Daily Field Report form or in a field logbook, as determined by the Project Manager (PM).
- The field activity report for the day should be written no later than that day and, if possible, during several different episodes during the day so that information recorded is as accurately and detailed as possible.
- Typical daily field activities that should be noted include, but should not be limited to, pre-shift worksite inspection, safety meetings and inspections, crew lineout, various work activities being performed that day, any personnel issues or accidents, weather and ground conditions and any communications with the owner or outside inspectors. An end of shift estimation of production accomplished at the various work activities for the day should be recorded here as well.
- All supervisors, managers and professional personnel should submit a daily field report each day in the field.
- Copies of all daily field reports shall be kept on file by the HGL, Inc. (HGL) field activity supervisor.

4.0 ATTACHMENTS

Below is Attachment A, Daily Field Report

ATTACHMENT A
DAILY FIELD REPORT

Name/Initials:	Date:
Start Time:	Project Name:
Stop Time:	Project/Billing No.:
Work Performed (e.g. DPT Locations Completed):	
Radiation Conditions Encountered	
Deviations from Schedule:	
Deviations from Approved Plans/Procedures:	
Names of Field Crew (C) / Visitors (V):	
Problems Encountered:	
Comments / Miscellaneous:	

STANDARD OPERATING PROCEDURE 4.07

USE AND MAINTENANCE OF FIELD LOG BOOKS

STANDARD OPERATING PROCEDURE 4.07

USE AND MAINTENANCE OF FIELD LOG BOOKS

1.0 PURPOSE

The purpose of this procedure is to describe the methods for use and maintenance of field log books. This procedure outlines methods, lists examples for proper data entry into a field log book, and provides the standardized HydroGeoLogic, Inc. (HGL) format.

This procedure provides guidance for routine field operations on environmental projects. Site-specific deviations from the methods presented herein must be approved by the HGL Project Manager and the HGL Quality Assurance Officer.

2.0 ABBREVIATIONS

HGL	HydroGeoLogic, Inc.
IDW	investigation derived waste
SOP	Standard Operating Procedures

3.0 RESPONSIBILITIES

All field personnel who travel to a site to conduct work related to environmental projects are responsible for documenting field investigation activities in project field log books in a legible manner and maintaining field log books over the course of the project in accordance with this standard operating procedure (SOP). Daily logs will be kept during field activities by the HGL Field Team Leader, or approved designee, to provide daily records of significant events, observations and measurements taken in the field.

The Project Manager or an approved designee is responsible for checking the field log books and verifying that the field log books have been completed in accordance with this SOP. This will be accomplished by reviewing all documents (Exhibits) and data produced during work performance.

4.0 PROCEDURE

4.1 INTRODUCTION

Field log books provide a means for recording observations and activities at a site. Field log books are intended to provide sufficient data and observation notes to enable participants to reconstruct events which occurred while performing field activities and to refresh the memory of field personnel while writing reports or giving testimony during legal proceedings. As such, all entries will be as factual, detailed and as descriptive as possible so that a particular situation can be

reconstructed without reliance on the collector's memory. Field log books are not intended to be used as the sole source of project or sampling information. A sufficient number of log books will be assigned to a project to ensure that each field team has a log book at all times.

4.2 FIELD LOG BOOK IDENTIFICATION

Field log books shall be bound books with consecutively numbered pages. Log books will be permanently assigned to field personnel for the duration of a project, or sampling event. When not in use, the field log books are to be stored in site project files. If site activities stop for an extended period of time (i.e., two weeks or more), field log books will be stored in the project files in the appropriate HGL office.

The cover of each log book will contain the following information:

- Organization to whom the book is assigned (i.e., HydroGeoLogic, Inc.)
- Project number (if different than site number)
- Book number
- Site name

4.3 LOG BOOK ENTRY PROCEDURE

Every field team will have a log book and each field activity will be recorded in the log book by a designated field team member to provide daily records of significant events, observations, and measurements during field operations. Beginning on the first blank page and extending through as many pages as necessary, the following list provides examples of useful and pertinent information which may be recorded (optional).

- Serial numbers and model numbers for equipment which will be used for the project duration
- Formulas, constants, and example calculations
- Useful phone numbers
- County, state, and site address

Entries into the log book may contain a variety of information. At a minimum, log book entries must include the following information at the beginning of each day:

- Date
- Site name and location and project number
- Start time
- Weather
- All field personnel and subcontractors present and directly involved
- Level of personal protective equipment being used on the site
- Equipment used and calibration procedures followed
- Any field calculations

In addition, information recorded in the field log book during the day will include (but is not limited to) the following:

- Sample description including sample numbers, time, depth, volume, containers, preservative, and media sampled
- Information on field quality control samples (i.e., duplicates)
- Sample courier airbill numbers and associated chains-of-custody
- Observations about site and samples (odors, appearance, etc.)
- Information about any activities, extraneous to sampling activities, that may affect the integrity of the samples
- Any public involvement, visitors, or press interest, comments, or questions; as well as times present at site
- Equipment used on site including time and date of calibration along with calibration gas/fluid lot numbers and expiration dates
- Background levels of each instrument and possible background interferences
- Instrument readings for the borehole, cuttings, or samples in the breathing zone and from the specified depth of the borehole, etc.
- Field parameters (pH, specific conductivity, etc.)
- Unusual observances, irregularities or problems noted on site or with instrumentation used
- Maps or photographs acquired or taken at the sampling site, including photograph number and description
- A description of the investigation derived waste (IDW) generated, the quantity generated, and the manner of IDW storage employed
- Photo Log: subject and persons, distance to subject, person taking photo, distance, direction, time, photo number, noteworthy items
- Forms numbers and any information contained therein used during sampling should be referenced. Note: a form does not take the place of the field logbook

All log book entries will be made in indelible black or blue ink. No erasures are permitted. If an incorrect entry is made, the data will be crossed out with a single strike mark and initialed and dated by the originator. Entries will be organized into easily understandable tables if possible. A sample format is shown in Exhibit 6-2.

All log book pages will be initialed and dated at the top of the page. Times will be recorded next to each entry.

No pages or spaces will be left blank. If the last entry for a day is not at the end of the page, a diagonal line will be drawn through the remaining space and the line will be initialed and dated. Log books can become contaminated when used in the field. Every effort should be made by the field team to avoid contaminating the log book. Log books can be kept in seal top poly bags or temporary plastic covers may be used.

4.4 REVIEW

The Project Leader or an approved designee will check field log books, daily logs, and Exhibits for completeness and accuracy on an appropriate site specific schedule determined by the project leader. Any discrepancies in these documents will be noted and returned to the originator for correction. The reviewer will acknowledge that these review comments have been incorporated by signing and dating the applicable reviewed documents.

5.0 EXHIBITS

Exhibit 4.07-1 Example Field Log

EXHIBIT 4.07-1
EXAMPLE FIELD LOG BOOK

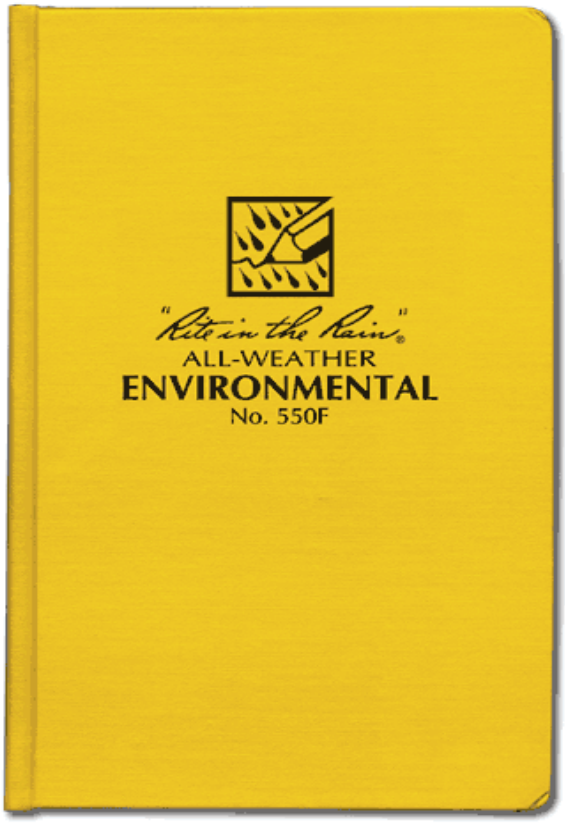

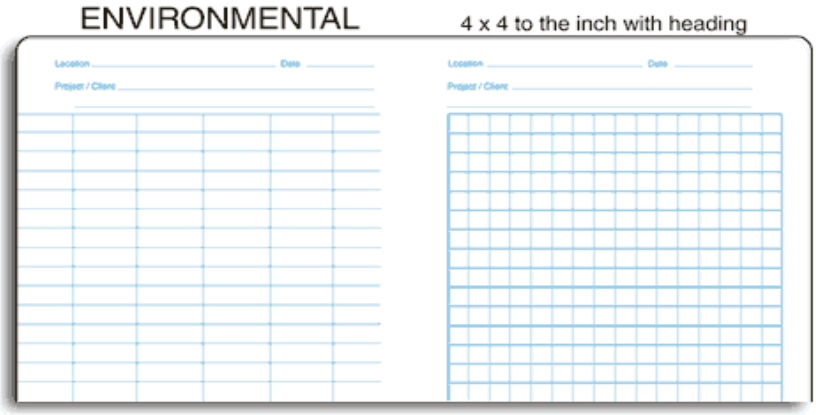

EXHIBIT 4.07-1 (Continued)

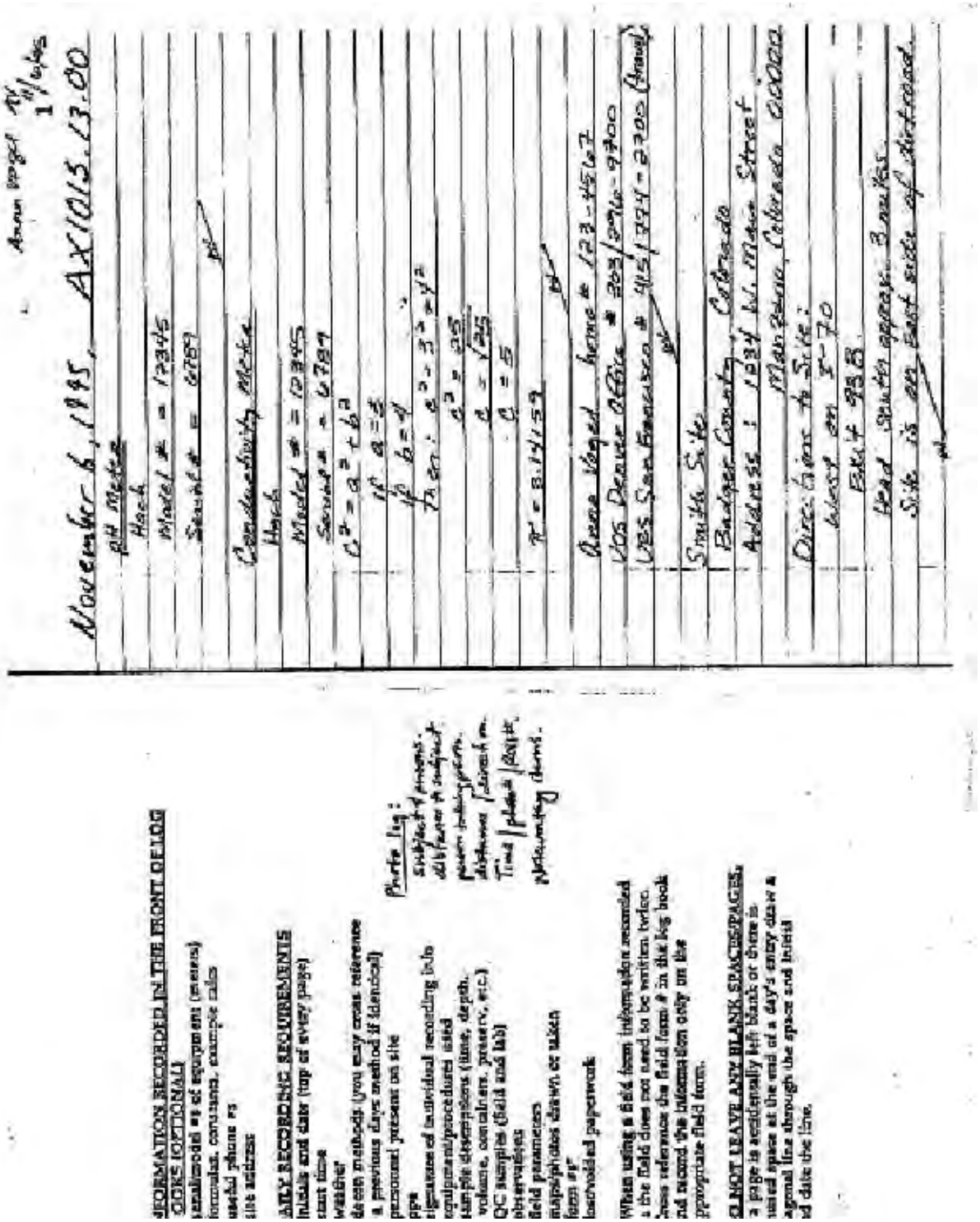

EXAMPLE FIELD LOG BOOK

EXHIBIT 4.07-1 (Continued)
EXAMPLE FIELD LOG BOOK

AV 11/6/95
2

November 6, 1995 Site Visit
0700 Arrive on site
Weather: 80°, sunny, slight breeze (~5 mph) from southwest
UOS Field Team: EPA OSC:
M.R. Smith J. P. Scarten
K.W. Wagner
P.R. Lane
PRP representative, L.M. Stein, will be accompanying the UOS Field Team.
Personal Protective Equipment - LEVEL D
Will be used on-site. (refer to site-specific health & safety plan).
All equipment will be decomed as follows:
- Brush equipment scrub-brush to remove gross particulates.
- Scrub thoroughly with Alconox/water solution.
- Rinse with reagent-grade distilled water.
- Rinse with reagent-grade methanol.
- Rinse with reagent-grade distilled water.
Allow equipment to gravity drain. Wrap equipment in tinfoil if not immediately used.
Sample procedure:
All surface water samples will be taken using a clean decontaminated TEFLON scoop; stainless steel/spoon and stainless steel bowl will be used for sediment samples.

AV 11/6/95
3

The samples will be taken from the ponds at the center of the dam opposite the outlets. (see below; refer to sample plan)
All total suspended solids (TSS) samples will be collected in a 500 ml polystyrene bottle - No preservative is necessary.
All VOA samples will be collected in two 40-mL amber glass vials and will be collected first. Preservation will be 4°C (ice).
→ Meters (pH) Decon = Rinse with reagent-grade distilled water

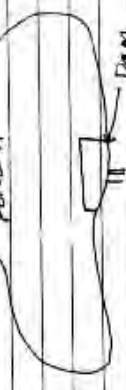

0730: leave trailer. Go to sample location SS-1 @ Pond A.
0745: Arrive @ Pond A.
Decon equipment as described on page 3 of this logbook.
Calibrate pH meter - Rinse probe

Time	STD	Reading	
0753	7.00	7.00	Rinse probe
0754	4.00	4.00	Rinse probe

0750 Calibrate Conductivity Meter using 10,000 STD -- Rinse probe

EXHIBIT 4.07-1 (Continued)
EXAMPLE FIELD LOG BOOK

AV 11/6/95
4

Time	Sample	Sample#	Label #
0802	VOA	8/088 VOAA	101
0803	TSS	8/08 TSSA	103*

Decon equipment (scoop only)
* labed 103 fell in mud - destroyed it.

Field Parameters

Time	pH	Conductivity
0815	6.35	6.10

Decon equipment (meters only)
Fill out surface water quality Sheet.
Note - wind speed is picking up - The ponds became turbulent.
0829 - Leave Pond A - go to Pond B.
AV

0840 - Arrive at Pond B
Pond B sampling procedure.
0842 - Decon equipment.
Calibrate pH meter

Time	STD	Reading
0844	4.00	4.00
0845	7.00	7.00

Rinse probe
Rinse probe
0847 Calibrate conductivity meter using 10,000 STD - Rinse probe.
Decon sampling equipment (scoop).

Time	Sample	Sample#	Label #
0902	VOA	8/088 VOA BD	106
0903	TSS	8/088 TSS BD	107

0905 Decon scoop.
AV

Rinsate Samples

Time	Sample	Sample#	Label#
0920	VOA	8/088 VOAR	107-108

FIELD PARAMETERS

Time	pH	Conductivity
0934	6.00	590

Decon meters as noted on page 3
of this logbook.
Fill out surface water quality sheet.
AV
0940 - Leave Pond B - head back to trailer to pack samples for shipment.
0952 - Arrive at Trailer.
0959 - Complete chain-of-custody forms for samples to be shipped.
Wrap samples according to LOS TSOP.
1020 - Seal Cooler and attach Custody seals.
1030 - Take cooler to Federal Express for shipping.
Car # 123456789
1035 - Leave Federal express.
Sampling Complete.
AV 11/6/95

11/6/95 AV
5

STANDARD OPERATING PROCEDURE 16

SURFACE AND SHALLOW DEPTH SOIL SAMPLING

STANDARD OPERATING PROCEDURE 16

SURFACE AND SHALLOW DEPTH SOIL SAMPLING

1.0 PURPOSE

The purpose of this procedure is to describe the equipment and operations used for sampling surface and shallow depth soils. This procedure outlines the methods for surface and shallow depth soil sampling for the Santa Susana Field Laboratory (SSFL) Radiological Study.

2.0 DEFINITIONS AND ABBREVIATIONS

2.1 DEFINITIONS

Soil: All unconsolidated materials above bedrock.

Surface Soils: Soils located zero to six inches below ground surface.

Shallow Depth Soils: Soils located above the bedrock surface and from six inches to 10 feet below ground surface.

2.2 ABBREVIATIONS

FSP	Field Sampling Plan
MARSSIM	Multi-Agency Radiation Survey and Site Investigation Manual
SOP	Standard Operating Procedure
HGL	HydroGeoLogic, Inc.

3.0 RESPONSIBILITIES

Sampling personnel are responsible for performing the applicable tasks and procedures outlined herein when conducting work related to environmental projects.

The Project Leader or an approved designee is responsible for ensuring that performance standards specified by this SOP are achieved. This will be accomplished by reviewing all documents, exhibits and field procedures.

4.0 PROCEDURES

4.1 INTRODUCTION

The objective of surface and shallow depth soil sampling for this study is to determine the representative concentration of each radionuclide of potential concern in surface soil within the Area IV and the northern boundary areas (NBZ) Study Area.

4.2 SAMPLING EQUIPMENT

Surface and shallow soil sampling equipment includes:

- Stainless steel mixing bowl;
- Stainless steel trowels or spoons;
- Stainless steel hand auger;
- Stainless steel core sampler which uses stainless steel or Lexan7 liners (optional);
- Stainless steel shovel; and
- Appropriate sample containers.

4.3 DECONTAMINATION

Before initial use, and after each subsequent use, all sampling equipment must be decontaminated using the procedures outlined in HGL Standard Operating Procedure (SOP) 2.01, Equipment Decontamination.

4.4 SAMPLING LOCATION/SITE SELECTION

Refer to the Site-specific Field Sampling Plan (FSP) Addenda for sampling specific sampling grid and sample locations.

4.5 SAMPLING APPROACHES

The specific sampling approach is in accordance with the Site-specific FSP Addenda and the Multi-Agency Radiation Survey and Site Investigation Manual (MARSSIM). Refer to the Site-specific FSP Addenda for Site classifications, specific targeted sampling locations, specific grids, and sample densities.

4.6 GENERAL

Surface sampling pits will be filled in with the material removed during sampling. Where a vegetative turf has been established, fill in with native soil or potting soil and replace the turf if practical in all holes or trenches when sampling is completed. Each logging/sampling borehole will be sealed with high-solids bentonite chips after completion of activities at each location. Bentonite will be placed in the borehole as quickly as possible to minimize the possibility of contaminant migration. Each borehole will be patched at the surface with native soil.

4.6.1 Homogenizing Samples

Homogenizing is the mixing of a sample to provide a uniform distribution of the contaminants. Proper homogenization ensures that the containerized samples are representative of the total soil sample collected. All samples to be composited or split should be homogenized after all aliquots have been combined.

4.6.2 Compositing Samples

Compositing is the process of physically combining and homogenizing several individual soil aliquot of the same volume or weight. Compositing samples provides an average concentration of contaminants over a certain number of sampling points.

4.6.3 Splitting Samples

Splitting samples (after preparation) is performed when multiple portions of the same samples are required to be analyzed separately. Fill the sample containers for the same analyses one after another in a consistent manner.

4.7 SURFACE SOIL SAMPLING

Perform the following steps for surface soil sampling:

- Prior to sampling, remove leaves, grass, and surface debris using decontaminated stainless steel trowel;
- Label the lid of the sample container with an indelible pen or affix the sample label to the side of the jar and tape as to make it impervious to water prior to filling the container with soil.
- Collect surface soil samples with a decontaminated stainless steel trowel, spoon or hand auger and transfer to a decontaminated stainless steel bowl for homogenizing.
- Collect samples in the order of volatilization sensitivity. The most common collection order is as follows:
    - Volatile organic compounds (VOC);
    - Purgeable organic carbon (POC);
    - Purgeable organic halogens (POX);
    - Total organic halogens (TOX);
    - Total organic carbon (TOC);
    - Extractable organics;
    - Total metals;
    - Dissolved metals;
    - Phenols;
    - Cyanide;
    - Sulfate and chloride;
    - Turbidity;

  - Nitrate and ammonia; and
  - Radionuclides.
- Immediately transfer the sample into a container appropriate to the analysis being performed;
- Place the samples in a cooler for transport to an analytical laboratory;
- Immediately after the sample is collected, record applicable information in the field log book as outlined in HGL SOP 4.07, Use and Maintenance of Field Log Books. This information may also be entered on the Boring Log.
- Excess soil sample media shall be placed in the soil boring or pit and filled to grade with native soil, potting soil or bentonite chips.
- Decontaminate all sampling equipment (HGL SOP 2.01, Equipment Decontamination);
- Complete the chain-of-custody Record and associated documentation.

4.8 SHALLOW DEPTH SOIL SAMPLING USING A HAND AUGER

Perform the following steps to collect shallow depth soil samples:

- Use a decontaminated stainless steel shovel to remove the top layer of soil.
- Remove leaves, grass, and surface debris that may have contacted the shovel using a
- decontaminated stainless steel trowel;
- Excavate soil to the pre-determined sampling depth by using a decontaminated hand auger.
- Periodically, remove the cuttings from the auger;
- When the proper sample depth is reached, remove the hand auger and all cuttings from the hole;
- Lower the decontaminated hand auger to the bottom of the hole.
- Mark the sample interval (i.e., one foot above ground level) on the auger;
- Advance the auger until it is flush with the interval mark at ground level;
- When the auger has been advanced the total depth of the required sample, remove it from the bottom of the hole;
- Immediately transfer the sample into a container or stainless steel bowl for compositing and homogenizing as specified in the project-specific Field Sampling Plan appropriate to the analysis being performed using a stainless steel spoon or trowel;
- Samples will be identified and labeled.
- Samples will be preserved and held as per Sample Containers, Preservation and Maximum Holding Times stated in the FSP;
- Complete the Chain-of-Custody Record and associated documentation.

- Record applicable information in the field log book as outlined in Use and
- Maintenance of Field Log Books (SOP 4.07).
- Decontaminate all sampling equipment (HGL SOP 2.01, Equipment Decontamination).

4.9 ABANDONMENT PROCEDURES

Surface sampling pits will be filled in with the material removed during sampling. Where a vegetative turf has been established, fill in with native soil or potting soil and replace the turf if practical in all holes or trenches when sampling is completed. Each logging/sampling borehole will be sealed with high-solids bentonite grout chips after completion of activities at each location. Bentonite will be placed in borehole as quickly as possible to minimize the possibility of contaminant migration. Each borehole will be patched at the surface with native soil.

4.10 REVIEW

The Project Leader or an approved designee shall check all Exhibits and field log books used to record information during sampling for completeness and accuracy. Any discrepancies will be noted and the documents will be returned to the originator for correction. The reviewer will acknowledge that these review comments have been incorporated by signing and dating the checked by and date blanks on the Exhibits and at the applicable places in the log book.

5.0 REFERENCES

U.S. Environmental Protection Agency (EPA). 1989. A Soil Sampling Quality Assurance User's Guide.

EPA/600/8-89/046, U.S. Environmental Protection Agency, Washington, DC.

HydroGeoLogic, Inc. 2007. Standard Operating Procedure 4.07, Use and Maintenance of Field Log Books. Standard Operating Procedures.

HydroGeoLogic, Inc. 2007. Standard Operating Procedure 2.01, Equipment Decontamination. Standard. Operating Procedures.

STANDARD OPERATING PROCEDURE 24

GEOLOGIC BOREHOLE LOGGING

STANDARD OPERATING PROCEDURE 24

GEOLOGIC BOREHOLE LOGGING

1.0 PURPOSE

The purpose of this procedure is to describe the methods for geological borehole logging of soil and data collection.

This procedure provides guidance for routine field operations for the Santa Susana Radiological Background Study. Deviations from the methods presented herein must be approved by the Project Leader and HydroGeoLogic, Inc. (HGL) Quality Assurance Officer.

2.0 DEFINITIONS AND ABBREVIATIONS

2.1 DEFINITIONS

Plasticity: The property of permanently changing shape without movement on any visible fractures.

2.2 ABBREVIATIONS

AGI American Geologic Institute
SPT Standard Penetration Test
USCS Unified Soil Classification System

3.0 RESPONSIBILITIES

Personnel conducting exploratory soil boring and monitoring well borehole logging are responsible for performing the applicable tasks outlined in this procedure when conducting work related to environmental projects.

The Project Leader or an approved designee is responsible for checking all work performance and verifying that the work satisfies the applicable tasks required by this procedure. This will be accomplished by reviewing all documents (Exhibits) and data produced during work performance.

4.0 PROCEDURES

4.1 INTRODUCTION

A major portion of the work produced at an environmental site is geologic in nature and is concerned with characterizing the physical subsurface and the geologic and hydrologic processes operating at the site. A properly prepared borehole log serves as an essential tool in making these assessments and correlations. This Standard Operating Procedure (SOP) defines the methodology of collecting pertinent data so that all borehole logs made at a site can create a consistent, uniform database from which interpretive conclusions can be made with confidence. Large-scale inferences such as vertical and horizontal extent of strata, facies changes, attitude of bedding or layering,

structural features (faults, folds, fractures, dikes, etc.), location of the water table, lithologic characterizations, and the extent of subsurface contamination are made from small-scale observations recorded on the borehole log. These observations include bedding, grain size, degree of sorting, shape of grains, color, hardness, organic vapor levels, and other observable physical characteristics including visible evidence of contamination.

Logging should document both general and specific lithologic information about the borehole. In all cases, the lithologic log should be identified by the specific site number; well/boring number; drilling method; location; date of drilling; individual logger (geologist); drilling contractor; significant organic vapor reading; visible evidence of contamination; depth to water first encountered; final depth of water level; well/boring elevation (if data is available); total depth in feet; graphic log; and lithologic description.

Lithologic descriptions for unconsolidated materials often use the Unified Soil Classification System (USCS) or standard geologic field description methods, Compton 1962. Descriptions of bedrock should follow applicable U.S. Geologic Survey Standards.

Lithologic descriptions of unconsolidated material should contain the following characteristics when possible:

- Soil or formation name;
- Gradation degree of sorting;
- Principal constituent;
- Specific descriptors for principal constituents (e.g., plasticity, grain size, and shape);
- Firmness/hardness;
- Minor constituents;
- Moisture content;
- Color;
- Particle morphology; and
- Other descriptors (i.e., visual evidence of contamination, specific monitoring equipment
- readings including gamma detector readings).

4.2 CLASSIFICATION SYSTEM

Sections 4.2.1 through 4.2.11 will describe in detail the parameters and descriptive terminology used to classify each sample for the bore log.

4.2.1 Soil or Formation Name

The soil or formation name will include the major constituent(s) and may be preceded by a single-word modifier indicating the subordinate constituent. Percentages of each constituent will be used to classify the material without actually recording constituent percentage. The textural terms used

to classify a soil are shown in Exhibit 24-1, Triangular Diagram Showing Percentage of Sand, Silt, and Clay in Each Textural Class.

4.2.2 Gradation (Degree of Sorting)

Size sorting describes the extent to which grain size is uniform. The comparison chart listed in Exhibit 24-2, "Comparison Chart for Estimating Degree of Sorting," will be used to describe soils being logged from a borehole.

4.2.3 Principal Constituent

Principal constituents recorded during borehole logging include an identification of the following unconsolidated material types:

- Clay;
- Sand;
- Cobbles;
- Silt;
- Gravel; and
- Boulders.

If known, an identification of the potential source of the material should be made (i.e., alluvium, colluvium, artificial fill, or residual material).

4.2.4 Principal Constituent Descriptors

Additional descriptors for the principal material constituents may be added to the log in order to further delineate or accurately record subtle changes in the lithologic structure. Modifiers such as grain size, shape, and plasticity of materials (i.e., high, medium, and low plasticity).

4.2.5 Consistency/Density/Rock Hardness

The characteristics of unconsolidated material are often determined by the Standard Penetration Test (SPT). The SPT involves driving a split spoon sampler into the material by dropping a 140 pound weight from a height of 30 inches. The resistance of the material is reported in the number of blows of the weight required to drive the spoon one foot and translates into the following descriptors:

# of Blows/Foot	Cohesive Consistency (Clay)
0-2	Very soft
2-4	Soft
4-8	Medium
8-15	Stiff
15-30	Very stiff
30+	Hard

# of Blows/Foot	Cohesive Consistency (Gravel)
0-4	Very loose
4-10	Loose
10-30	Medium dense
30-50	Dense
50+	Very Dense

# of Blows/Foot	Rock Hardness
<20	Weathered
20-30	Firm
30-50	Medium Hard
50-80	Hard
80+	Very Hard

4.2.6 Minor Constituents

Constituents not previously described in the principal constituent description may be described as a percentage or by weight. Typically, modifiers for minor constituents conform to the following standards:

- No modifier < 5%
- Slightly 5-12%
- Moderately (i.e. add (y) or (ey) such as silty clay) 12-40%
- Very 40-50%

4.2.7 Moisture Content

Terms in a wide range, from dry to saturated, are used to describe the relative moisture content of a field soil sample. These terms are described as follows:

- Dry - The sample is completely without moisture. Dry, silty sands, for example, will produce suspended particles when dropped by hand.
- Damp - Samples containing a very slight amount of water.
- Moist - Soils in this range are near the maximum water content for their maximum
- compactibility or density. Moist soils will form a ball when compressed in the hand.
- Wet - The soil samples are wet enough to produce free water upon shaking but still contain unoccupied air voids. Fine-grained soils close to the liquid limit would be termed wet.
- Saturated - Soils with zero air voids. Samples placed in sample jars or bags will
- probably have standing water after a short period of time.

4.2.8 Color

The color of soil and associated materials will be recorded on the borehole log. Color descriptors should include but are not limited to the following descriptors: black, grey-black, brown, olive, mottled, streaked, etc. Color charts should be used to provide general logging guidance but specific use is not necessary for adequately describing lithology.

4.2.9 Particle Morphology

The key elements of particle morphology are roundness and sphericity. Roundness is a measure of the curvature of grain corners. Sphericity is a measure of how equal the three axial lengths (x, y, z) of an object are. Determination of both properties is facilitated by the use of a hand lens. Estimate grain roundness and sphericity by using the American Geologic Institute (AGI) Data Sheet (Exhibit 24-4).

4.2.10 Other Descriptors

Field screening data collected during the drilling process may help further characterize site conditions during subsurface investigations. Readings from on-site monitoring equipment such as the borehole gamma detector should be recorded at each sample interval. Other useful information includes the organic content and the presence or absence of waste material in samples.

4.2.11 Particle Size Distribution

An estimate of particle sorting by grain size is often useful for borehole logging purposes. Precise estimates of percent composition of the sample are not necessary.

USCS GRAIN SIZE CATEGORIES		
EXACT SIZE LIMITS	**APPROXIMATE INCH EQUIVALENTS**	**NAME OF LOOSE AGGREGATE**
>256 MM	>10 IN.	Boulder gravel
64 - 256 MM	2.5 - 10 IN.	Cobble gravel
32 - 64 MM	1.2 - 2.5 IN.	Very coarse pebble gravel
16 - 32 MM	0.6 - 1.2 IN.	Coarse pebble gravel
8 - 16 MM	0.3 - 0.6 IN.	Medium pebble gravel
4 - 8 MM	0.15 - 0.3 IN.	Fine pebble gravel
2 - 4 MM	0.08 - 0.15 IN.	Granule (or very fine pebble) gravel
1 - 2 MM	0.04 - 0.08 IN.	Very coarse sand
1/2 - 1 MM	0.02 - 0.04 IN.	Coarse sand
1/4 - 1/2 MM	0.01 - 0.02 IN.	Medium sand
1/8 - 1/4 MM	0.005- 0.01 IN.	Fine sand
1/16 - 1/8 MM	0.002 - 0.005 IN.	Very fine sand
1/256 - 1/16 MM	0.00015 - 0.002 IN.	Silt
<1/256 MM	<0.00015 IN.	Clay (clay-size materials)

From Wentworth Scale, Compton 1962.

The Comparison Chart for Estimating Percentage Composition (Exhibit 24-3) can be used to estimate the percentage of various grain sizes present in a sample. However, visual estimates usually provide sufficient information for characterizing site lithology.

4.3 BOREHOLE LOGS

Record data collected during exploratory boring soil logging in the field log book and on the HTRW Drilling Log provided in Appendix B, Field Forms. Use this Drilling Log on all applicable field drilling and subsurface sampling operations.

Geologic correlation and aquifer properties prediction are dependent on good exploratory boring sample descriptions. Rotary drilling with fluids is generally unacceptable since the drilling fluids may potentially contaminate the aquifer under investigation. High quality borehole data are generally acquired with a split-spoon or pitcher core barrel. This method of sampling provides detailed logging. The lithofacies interpreted from cuttings logs may lack the accuracy necessary for detailed correlation. Where possible, techniques such as geophysical borehole logging will be used to supplement cuttings descriptions. Note on the log any geologic description determined from borehole cuttings. The cuttings are often mixed over the entire length of the boring.

In bedrock formations, cuttings may be acquired from a reverse circulation, air rotary or from a dual wall rotary boring. These cuttings do not provide information on the in situ properties of the materials, but do provide adequate sample description information.

In summary, close sample spacing or continuous sampling in a boring provide the best material for descriptive geology. Use traditional geologic terminology and supplement with the USCS descriptive system when appropriate. Provide sufficient data on layering and other sedimentary structures and undisturbed textures. Sample numbers, depths, and analytes should be included in each description. The applicable field methods described by Compton (1962) and AGI (1982) are recommended. These methods are fully referenced in Section 5.0.

4.4 REVIEW

Personnel conducting borehole logging of soil will record field data on the HTRW Drilling Log provided in Appendix B Field Forms, and will record a chronological summary in the project log book. The applicable methods outlined in this procedure shall be used to record the data on this Drilling Log. The personnel conducting these operations will sign and date the “logged by” and “date” blanks on the Drilling Log. The Project Leader or designee shall check all field generated data and the Drilling Log, for completeness and accuracy. Any discrepancies will be noted and the Drilling Log will be returned to the originator for correction. The reviewer will acknowledge that corrections have been incorporated by signing and dating the “reviewed by” and “date” blanks on Drilling Log.

5.0 REFERENCES

American Geological Institute. 1982. “AGI Data Sheets.” Falls Church, Virginia.

ASTM 1984. “ASTM D1586, Description and Identification of Soils, Visual-Manual Procedure” in the Annual Book of ASTM Standards. V.04.08

Compton, R. R. 1962. "Manual of Field Geology." John Wiley and Sons, Inc., New York, New York, 378p.

Munsell. 1988. "Munsell Soil Color Charts." Macbeth Division, Kollmorgen Instruments Corporation, Baltimore, Maryland, 1988 edition.

U.S. Environmental Protection Agency (EPA). 1987. "A Compendium of Superfund Field Operations Methods." EPA/540/P-87/001 (OSWER Directive 9355.0-14). December 1987.

6.0 EXHIBITS

Exhibit 24-1 Triangular Diagram Showing Percentage of Sand, Silt and Clay in Each Textural Class
Exhibit 24-2 Comparison Chart for Estimating Degree of Sorting
Exhibit 24-3 Comparison Chart for Estimating Percentage Composition
Exhibit 24-4 Comparison Chart for Estimating Roundness and Sphericity

EXHIBIT 24-1

Triangular Diagram Showing Percentage of Sand, Silt and Clay in Each Textural Class

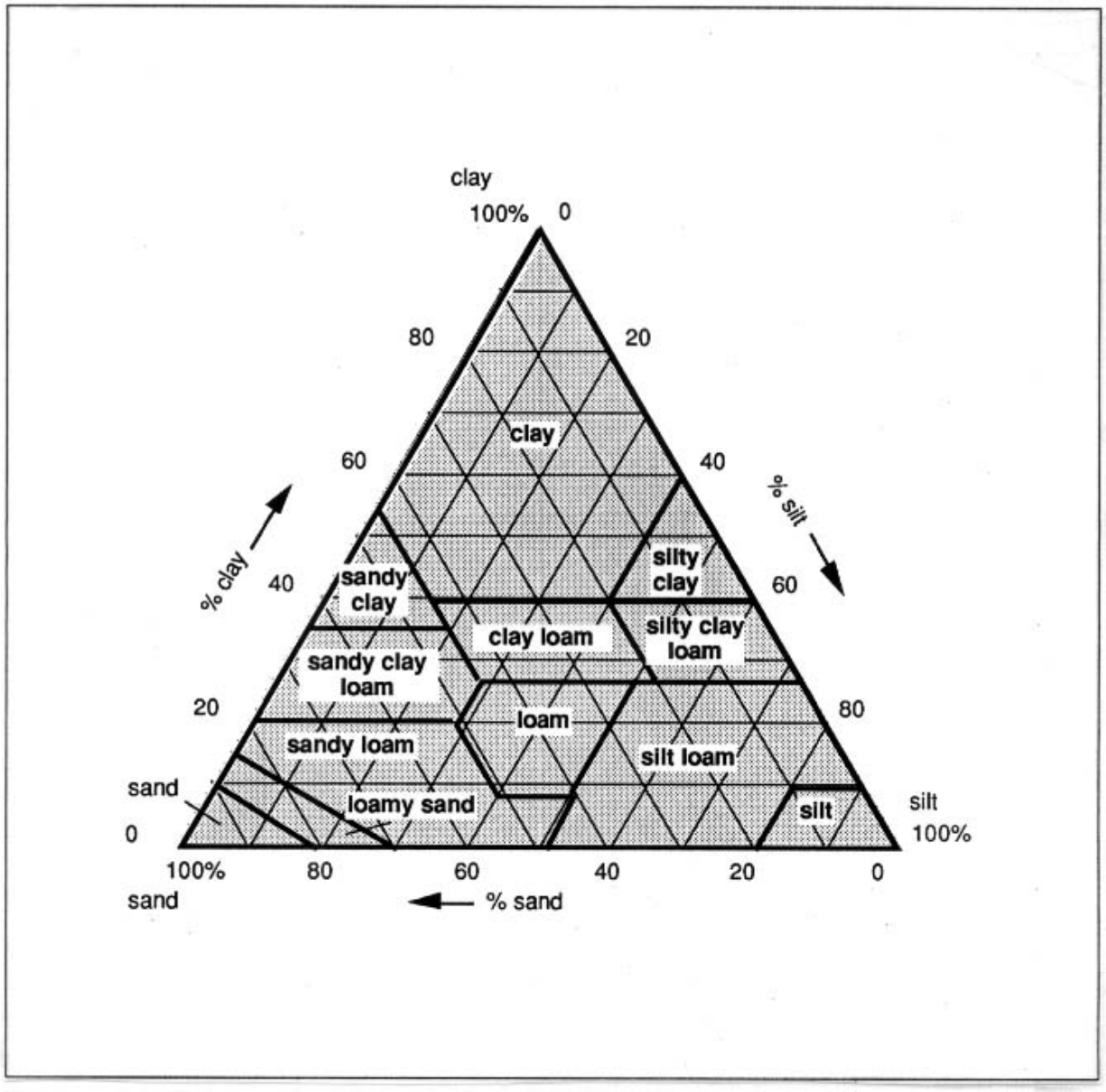

EXHIBIT 24-2

Comparison Chart for Estimating Degree of Sorting

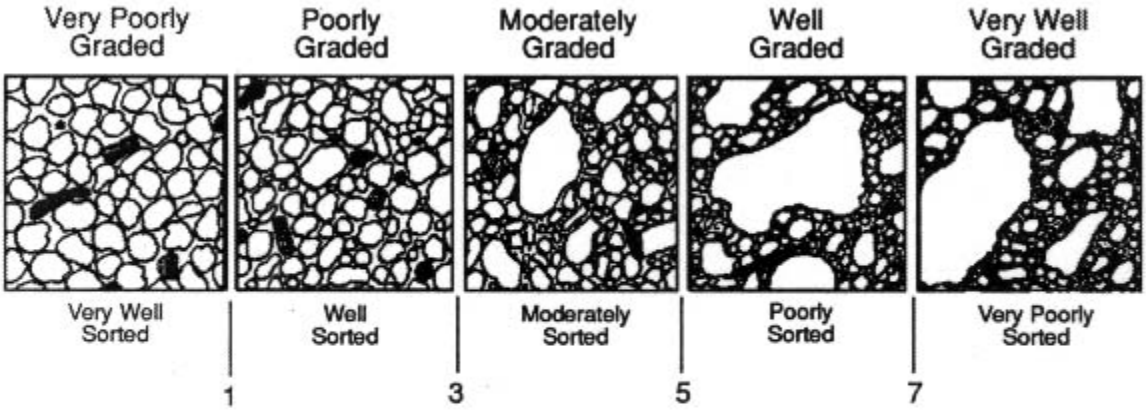

Terms for degrees of sorting. The numbers indicate the number of size-classes included by the bulk (80 percent) of the material. The drawings represent sandstones as seen with a hand lens. Silt and clay-size materials are shown diagrammatically by the fine stipple.

Reference: Compton, R.R. 1962. *Manual of Geology.* John Wiley & Sons, Inc. New York, N p. 214

EXHIBIT 24-3

Comparison Chart for Estimating Percentage Composition

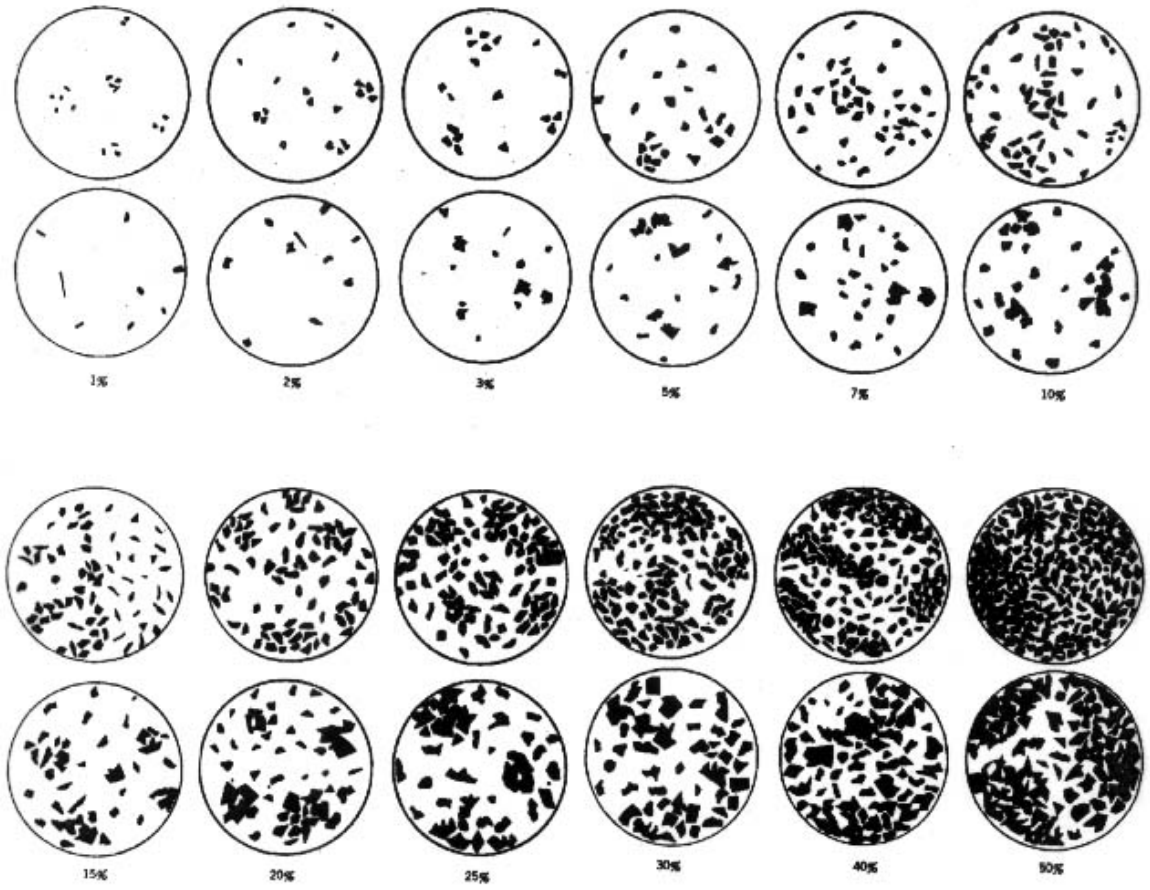

Reference: Compton, R.R. 1962. *Manual of Geology*. John Wiley & Sons, Inc. New York, NY p. 332-333

EXHIBIT 24-4

Comparison Chart for Estimating Roundness and Sphericity

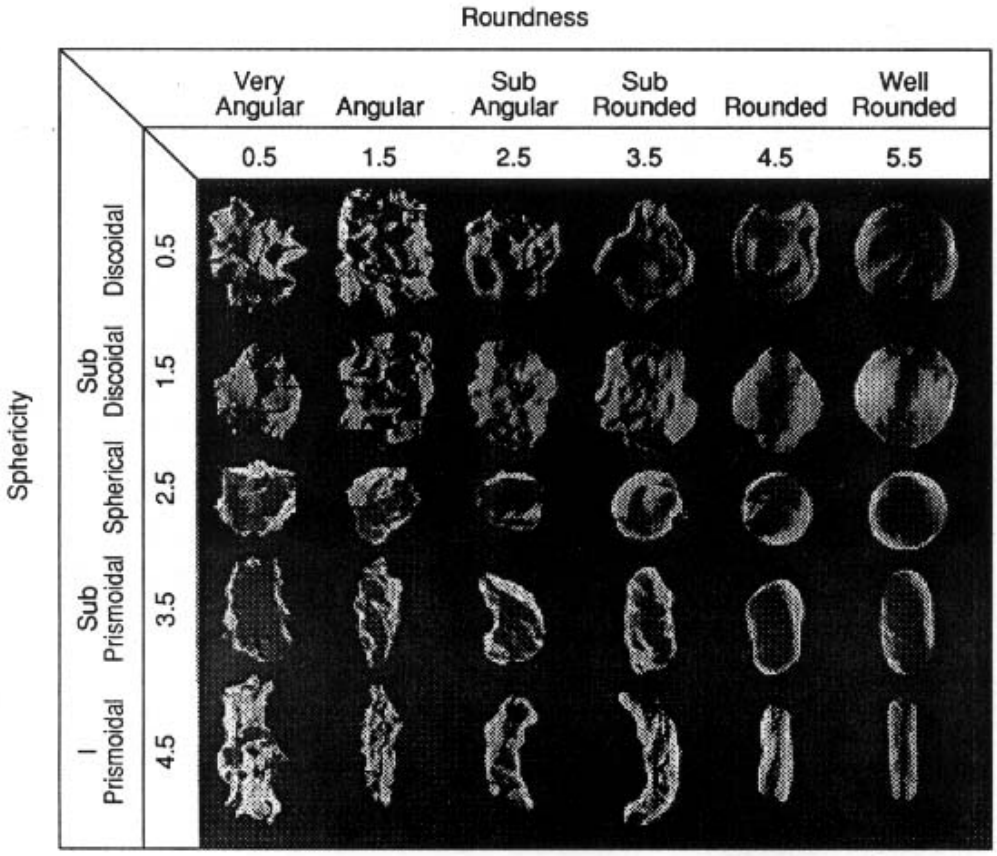

Reference:American Geological Institute. 1982. "AGI Data Sheet 18.1" in *AGI Data Sheets*. Fall Church, VA

STANDARD OPERATING PROCEDURE 27

BASIC GEOPROBE OPERATIONS

STANDARD OPERATING PROCEDURE 27

BASIC GEOPROBE OPERATIONS

1.0 PURPOSE

This procedure provides general guidance for operating the Model 6600 Geoprobe® system for subsurface exploration. The unit includes tools that can be used for collecting soil core samples, groundwater samples, and soil gas samples. This Standard Operating Procedure (SOP) is a brief overview of Geoprobe® operation. Consult the "Owner's Manual" published by Kejr Engineering, Inc. for more complete information. Geoprobe® operations should be conducted only by trained and experienced personnel.

2.0 DEFINITIONS AND ABBREVIATIONS

2.1 DEFINITIONS

Geoprobe: A vehicle-mounted, hydraulically-powered, soil probing machine that utilizes static force and percussion to advance small diameter sampling tools into the subsurface for collecting soil core, soil gas, or groundwater samples. (Geoprobe is a registered trademark of Kejr Engineering, Inc., Salina, Kansas).

Macro-Core Sampler: A 48-inch long sampling device capable of recovering a soil sample contained inside a removable liner. (Macro-Core is a registered trademark of Kejr Engineering, Inc., Salina, Kansas).

Liner: A removable/replaceable, thin-walled clear plastic tube inserted inside a Macro-Core sampling device for the purpose of containing and storing soil samples.

2.2 ABBREVIATIONS

ID	Inside Diameter
OD	Outside Diameter
PID	Photo-ionization Detector
TSOP	Technical Standard Operating Procedures

3.0 RESPONSIBILITIES

Field personnel are responsible for performing the applicable tasks and procedures outlined herein when conducting work related to environmental projects. The Project Leader or an approved designee is responsible for checking all work performance and verifying that the work satisfies the applicable tasks required by this procedure. This will be accomplished by reviewing all documents and procedures.

4.0 PROCEDURES

4.1 INTRODUCTION

The planning and implementation of Geoprobe® exploration requires consideration of the specific site conditions including soil types, topography, and site accessibility. Soils containing larger rocks, cobble, concrete debris, or similar materials may cause damage to the sampling equipment or result in penetration refusal at much shallower depths than required. Sampling locations on slopes and on loose or soft soils require special caution. As with any other subsurface soil exploration techniques, a utility locate must be conducted prior to the start of field operations to ensure the safe operation of the equipment and protect the operator and other field crew.

Other Geoprobe® equipment and methods not described in this SOP are also available for specific applications such as the carbide-tipped steel drill used to hammer through concrete and asphalt cover material or the use of the on-board vacuum system for assisting in soil gas sampling. There is also a new dual-wall core system and a screen point sampler for groundwater.

IMPORTANT: Read all safety precautions before attempting to operate the Geoprobe. See Safety Instructions, Appendix A. This applies to Operators AND Helpers.

Before operating the Geoprobe, take a few minutes to visually inspect the major components (Exhibit 27-1). From the rear of the vehicle open all doors, gates, and other enclosures to fully expose the Geoprobe components. This will ensure that the movements of the Geoprobe apparatus will not damage the Geoprobe components or other vehicle parts. Look for worn or damaged parts that may require attention or items that may hinder the movement of the equipment.

4.2 REMOTE ENGINE IGNITION

The Geoprobe is equipped with a remote engine ignition. This device allows starting and stopping of the vehicle motor from the probe operating position at the right rear of the vehicle. There are a few steps to follow when using this remote ignition:

- Put the vehicle transmission in “park.”
- Set the emergency brake. (The high speed (“fast”) will not work unless the brake is set.)
- Shut off the engine using the ignition switch in the vehicle cab.
- Set the Geoprobe master switch to the ON position. This switch is located on floor to the left of the driver’s-side seat.
- Block the front and back of one front wheel to prevent vehicle movement when the Geoprobe is in operation.
- Open the tailgate and slide the roof of the utility box all the way forward.

4.3 HYDRAULIC SYSTEM ACTIVIATION

A belt-driven hydraulic pump operates off the vehicle's engine and supplies power to the Geoprobe. A three-position toggle switch located on the right hand side at the operator's position at the right rear of the vehicle controls pump operation. The "off" position deactivates the hydraulic system. The "slow" position activates the pump while the vehicle engine remains at idle speed. Engine speed, and therefore hydraulic flow, is increased by placing the switch in the "fast" position. The fast position increases the engine speed to a pre-set level by activating a remote hydraulic throttle control. The "slow" position is depicted with the outline of a tortoise and the "fast" position is depicted with the outline of a rabbit.

- Ensure that the hydraulic control toggle switch is in the "off" position prior to starting the vehicle with the remote ignition. Start the engine using the remote engine ignition switch. This is a switch that works like the regular vehicle ignition. Rotate the switch clockwise a quarter turn to engage the starter. Once the engine starts, release the switch. It will automatically fall back into the operating position.
- Push the hydraulic control toggle switch to the slow position. Precaution should be taken to avoid damage to the hydraulic system when operating at temperatures below 10 degrees Fahrenheit (°F) (-12 Celsius [°C]). Run the hydraulic pump at slow speed for at least 15 minutes before starting probing operations. This will warm the hydraulic fluid sufficiently to allow adequate flow and prolong pump life.
- The regen switch is located on the upper right of the control panel. If the switch is moved to the full "up" position, the retractor "lift" speed of the probe will be doubled, allowing rods to be lifted much more quickly. However, when the regen switch is in the "up" position, the pulling power of the probe is also cut in half. If rods are sticking or not lifting from the boring, move the regen switch to the full "down" position to use the maximum available pulling power of the probe.

4.4 HYDRAULIC SYSTEM CONTROL, DERRICK POSITIONING

At the operator's position there are four hydraulic levers that control the positioning movements of the derrick. They are located at the bottom right side of the control panel and are labeled FOOT, SWING, EXTEND, and FOLD (Exhibit 27-2). Pushing or pulling on these levers will activate valves on various hydraulic pistons on the Geoprobe derrick causing these components to move. Movement of the Geoprobe components is controlled by the amount of movement of the levers. Partial movement of the levers results in partial opening of the hydraulic valves and a slower movement of that particular piston. **To position the Geoprobe derrick for operation:**

- From the operator=s position, slowly pull on the EXTEND control lever and laterally extend the derrick unit out as far as possible. Failure to fully extend the derrick unit could cause it to hit the roof and possibly dent the tailgate.

- Pull the FOLD control lever to pivot the derrick unit until it is perpendicular to the ground. This can be gauged visually or by using the bubble level mounted on the side of the derrick. Once the derrick is in this position the operator=s control panel will be vertically oriented.
- Push the FOOT control lever down to lower the derrick assembly until it is just a few inches above the ground surface.
- Lift up on the EXTEND control to slowly move the derrick assembly back toward the vehicle. Stop when the foot cylinder rod is approximately 8 to 10 inches from the vehicle tailgate.

CAUTION - Always position the derrick with the hydraulic control switch at SLOW speed. Ensure that the foot cylinder does not contact the vehicle tailgate because extensive damage to the cylinder rod may result.

- Push down on the FOOT control lever to extend the foot and put slight vehicle weight on the probe unit. Stop when the foot contacts the ground surface. It is not necessary to significantly raise the rear of the vehicle.

CAUTION - Always keep the rear wheels of the vehicle on the ground surface when putting weight on the probe unit. The vehicle may shift sideways during probing if the wheels do not contact the ground.

- Some left and right movement of the derrick is possible by using the swing lever. Normal placement of the derrick is in the center of the bed. Movement of the derrick may be necessary when there is slight movement of the vehicle during operations because of vibrations and shifting of the vehicle weight. Repositioning over a previous Geoprobe® location may also be easier using the swing mount.

Recenter the derrick before storing the derrick to avoid damage to the Geoprobe®. Watch the levers on the right side!

4.5 HYDRAULIC SYSTEM CONTROL, PROBE OPERATION

There are three levers mounted on the derrick that are used to perform the static push and percussion action to advance the Geoprobe® sampling equipment into the ground. The two main PROBE operation levers are located on the left side of the operator=s control panel (Exhibit 27-2). These levers advance the main probe piston toward the ground and activate the percussion head to hammer the drive rod into the ground. The third lever to control the hammer or tool rotation action is located on the hammer.

To perform the probe operation:

- Position the appropriate drive rod or sampling device on the ground. This is centered approximately two inches from the three sides of the derrick foot (Exhibit 27-5).
- Check to make sure the anvil and the anvil retainer cap assembly is in place and intact before hammering.
- Lower the hammer to allow the drive cap end of the drive rod or sampling device to enter the drive head on the probe. This is done by pushing down on the PROBE control lever. Minor adjustments can be made by adjusting the drive rod or sampler to further center it so that it is parallel to the main probe drive piston.
- Once the rod or sampler is centered, push down on the PROBE control lever to drive the rod or sampler into the ground. When the main probe drive is all the way down, lift up on the PROBE control lever to raise the probe off the drive rod or sampler. If the drive rod or sampler is to be removed from the ground the main probe drive needs only to be moved one foot above the drive cap to allow for its removal by hand and its replacement with a pull cap.
- If greater depth is required, raise the hammer, remove the drive cap from the rod in the ground, and thread an additional drive rod onto the one in the ground. Make sure the drive cap is then threaded onto the top of the new drive rod. Continue as in step 2. This process is repeated until the desired depth is reached.
- To remove the sampler or drive rod from the ground retract the probe approximately one foot from the top of the drive cap on the drive rod or sampler. Unthread the drive cap and thread on a pull cap. Lift the hammer latch located on the end of the main drive probe and lower the probe over the pull cap (Exhibit 27-6). Push the hammer latch down to catch the flanged rim on the pull cap and slowly raise the probe until the latch catches the flange on the pull cap (Exhibit 27-7). Raise the probe all the way up and then slightly lower it to release the tension on the pull cap and flip the hammer latch outward to release the pull cap. Raise the probe all the way up to allow the pull cap and the drive rod to be unthreaded from the drive rod string.
- Normal friction against the drive rod by the soil in the ground will usually hold the rest of the drive rod string and prevent it from slipping back down the drive hole. However, to ensure that the string does not slip back down the hole, attach vice grips, a pipe wrench, or a Regen Pull Ring to the uppermost drive rod near the ground surface as a precaution.
- In addition to the static push from the main hydraulic probe piston, the drive rods can be hammered into the soil using the percussion drive head located at the end of the probe. To activate the percussion drive head make sure that the HAMMER/rotation control lever located on the probe drive head is in the hammer position. This means the lever is pulled forward completely and is parallel to the ground. This ensures that all of the hydraulic pressure is being directed to activate the hammer.
- The HAMMER control lever is located next to the PROBE control lever on the operator=s control panel. The hammer is activated only when the lever is pushed completely down.

- Use the percussion drive head to hammer the drive rod into the ground when the static push is insufficient to advance the drive rod. This becomes apparent when the resistance on the drive rod causes the foot, derrick, and rear of the vehicle to rise slightly off the ground. The foot should be allowed to rise no more than six inches off the ground before use of the percussion drive head is warranted. At no time should the rear wheels of the vehicle be allowed to lose contact with the ground surface. The Geoprobe will likely shift in this situation, and could fall off the drive rods creating a serious safety hazard.

4.6 SOIL SAMPLING USING A MACRO-CORE OPEN TUBE SOIL SAMPLER

The Geoprobe system offers a variety of options for performing soil sampling. The Macro-Core Open Tube Soil Sampler is a 4-foot-long steel tube that is threaded on both ends to allow the attachment of a cutting shoe on one end and a drive head on the other (Exhibit 27-8). A clear plastic or acetate liner is placed inside the Macro-Core to collect a 3- to 4-foot continuous soil core as the device is driven into the ground. Once removed from the steel sheath the clear liner provides an intact visual representation of the various soil layers that can be further examined or sampled. It is important to clean the soil from the threads and the inside of the Macro-Core prior to use.

To use the Macro-Core Open Tube Soil Sampler:

- Thread the drive head into one end of the Macro-Core® tube, and then thread a drive cap onto the threaded fitting at the end of the drive head.
- Place a plastic spacer ring onto the acetate liner. Insert the clear plastic liner approximately three quarters of the way into the Macro-Core® tube. If desired a plastic core catcher can be used in place of a spacer ring to prevent loose material from falling out of the liner.
- Snap the plastic spacer or core catcher onto the cutting shoe. Slide the assembled cutting shoe/spacer/liner into the sampler tube and thread the cutting shoe into the sampler tube.
- The Macro-Core ® Open Tube Soil Sampler is now ready to be used. Follow the instructions for use as described above in Section 4.5, Hydraulic System Control, Probe Operation.
- The Macro-Core® assembly is longer than the travel length of the main probe piston. For the initial drive into the ground extend the probe to its maximum travel distance and then raise the foot of the derrick approximately one foot off the ground to allow for the Macro-Core® assembly to be inserted into the drive head of the probe. Use the FOOT control lever to perform the initial push into the soil. The hammer drive can also be used with the FOOT control to perform this drive. When the foot does make contact with the ground surface, switch to operating the PROBE control lever to complete the drive.
- To remove the Macro-Core®, retract the probe to its maximum travel distance to pull the Macro-Core7 out of the ground. To remove the final foot of the Macro-Core® it may be

possible to pull it out by hand or use the FOOT control lever to raise the foot off the ground and completely extract the Macro-Core® from the soil.

- Once the Macro-Core® is removed from the ground it can be placed on a level work surface and the cutting shoe/spacer/liner assembly unthreaded and removed from the steel sample tube. This may be possible by hand or the sampler can be placed in a vise and the Macro-Core® wrench used. The cutting shoe has a notched groove along its outer shoulder. The Macro-Core® wrench has a tab on one end that fits into this notched groove and allows the cutting shoe to be unthreaded off the steel sample tube.
- Following appropriate decontamination procedures, the cutting shoe can be reused on subsequent sampling drives. New plastic spacers (or core catchers) and liners are used for each additional sample core.
- For additional sampling deeper than four feet place the Macro-Core® assembly into the original excavated hole. It may be possible to push the Macro-Core® part way into the hole so that the foot of the derrick does not need to be moved. Use the main probe drive to push the Macro-Core® into the original 4-foot-deep hole. Fully retract the main probe, unthread the drive cap, thread a drive rod on to the drive head of the Macro-Core®, and then thread the drive cap onto the top of the drive rod. Lower the main probe drive onto the drive cap and use it, with the hammer if necessary, to drive the Macro-Core® drive rod string into the ground. Use the procedure described in step 5 to remove the Macro-Core ® and drive rods from the ground. Note that the drive rods are 3 feet long and not 4 feet long like the Macro-Core®. Use this same procedure to place additional drive rods to advance the Macro-Core® to the maximum desired sampling depths. Make sure to recover and empty the core barrel every three to four feet.
- Repeatedly pulling the Macro-Core® in and out of a hole during deep sampling may enlarge the hole allowing the core and rods to drop. Use a vise-grip, wrench, or Regen Pull Ring to hold the rod.
- Never drive the core more than four feet per sample. If sloughing/caving is suspected, only drive one rod three feet. Overfilling the core may cause the liner to collapse causing jamming.
- Be advised that as additional drive rods are added more play and flex occurs in the drive rod string. When positioning the drive cap into the main probe drive head be sure to keep your fingers out of this pinch point. Grab the top drive rod at least one foot away from the top and wear leather gloves when handling these objects. Since these rods and the Macro-Core® are driven into the ground they may contact rocks or other hard items that may cause sharp burrs and scratches on the metal and contact with bare skin can cause painful cuts.

4.7 INSTALLING PVC FOR THE BOREHOLE GAMMA LOGGIN SURVEY

After subsurface soil sampling activities are completed, the Macro-Core® sampler and the inner sampling rods will be removed from the borehole. The 3.25 inch OD outer drive casing will be left in the ground to keep the borehole from collapsing. Polyvinyl chloride (PVC) piping, with an

end cap, will be lowered to the bottom of the borehole. The PVC will be schedule 40 and have an inner diameter of at least 2.0 inches. Next, downward pressure will be applied to the PVC piping to dislodge the disposable tip attached to the outer drive casing. The outer drive casing will then be retracted, while the DPT operator applies continuous downward pressure to the PVC piping, ensuring the PVC remains at least 6 feet bgs. After the outer drive casing has been fully retracted from the borehole, the remaining PVC piping will be measured to document the final completion depth. The gamma logging probe will be lowered into the PVC pipe slowly, at a rate of approximately 1-inch per second, while observing the count rate. The meter will be stopped at each 6-inch interval and a one minute static integrated measurement will be taken. The borehole gamma survey will be executed in accordance with HGL SOP No. 36 *Borehole Gamma Logging*.

5.0 REFERENCES

Kejr Engineering, Inc. 2000. The Yellow Field Book (0100A).

Kejr Engineering, Inc. 2003. Geoprobe® Systems Tools Catalog. 601 North Broadway, Salina, Kansas 67401. 1-800-GEOPROBE, 785-825-1842, Fax: 785-825-2097, www.geoprobe.com.

Kejr Engineering, Inc. 2003. Geoprobe® Systems. Operator=s Manual, Geoprobe® Model 5410 DirectPush Machine – "The Tools for Site Investigation."

U.S. Environmental Protection Agency (EPA). 1987. "A Compendium of Superfund Field Operations Methods." EPA/540/P-87/001. (OSWER Directive 9355.0-14.) December 1987.

6.0 EXHIBITS

Exhibit 27-1 Generalized Basic Geoprobe® Parts
Exhibit 27-2 Location of Controls and Control Panel of the Geoprobe® Model 6600
Exhibit 27-3 Master Switch
Exhibit 27-4 Emergency Stop Button
Exhibit 27-5 Geoprobe Model 6600 - Truck Mounted
Exhibit 27-6 Raising the Hammer Latch
Exhibit 27-7 Closing the Hammer Latch under the Pull Cap
Exhibit 27-8 Macro-Core® Open-Tube Sampler Assembly
Exhibit 27-9 Screen Point Groundwater Sampler
Exhibit 27-10 Mill Slot Groundwater Sampler

APPENDIX A Safety Instructions

EXHIBIT 27-1
Generalized Basic Geoprobe® Parts

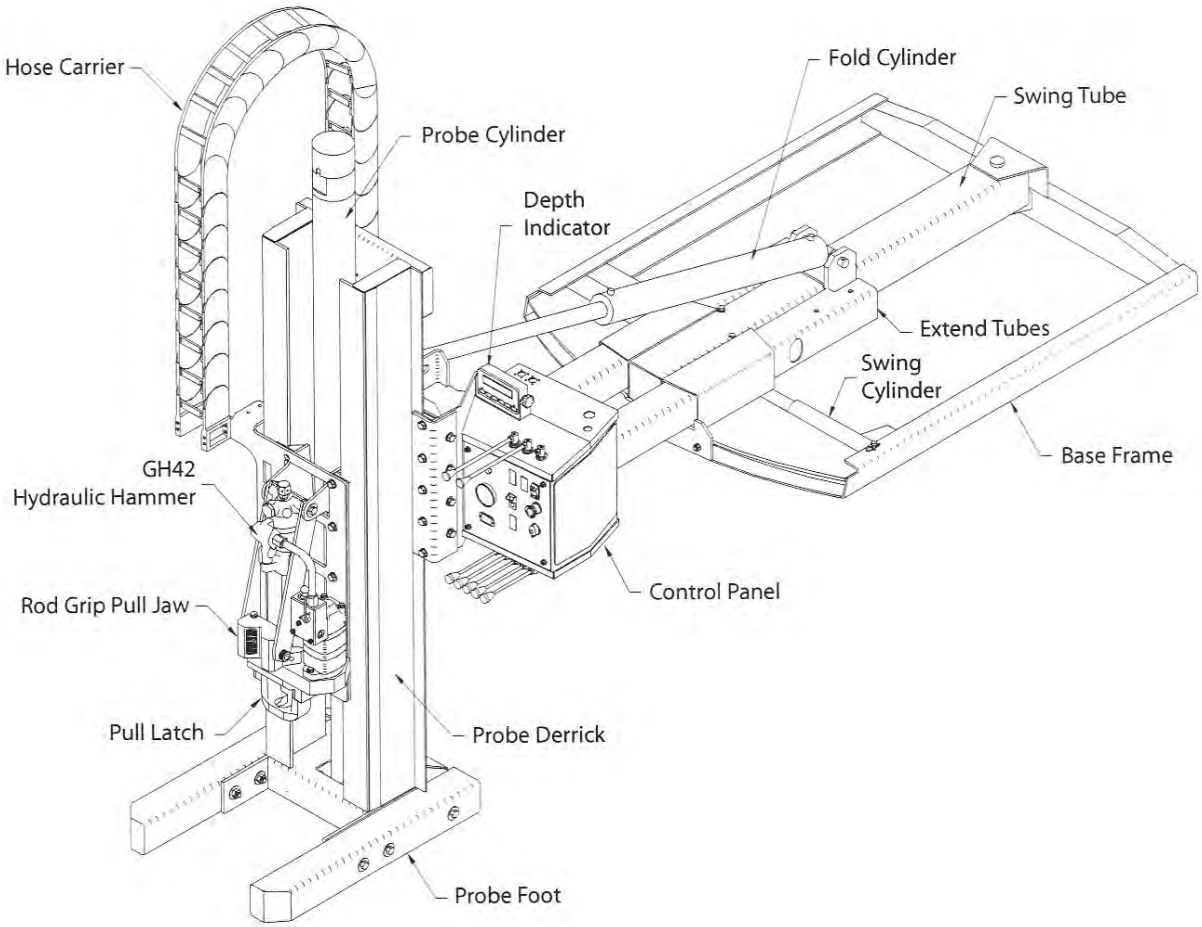

EXHIBIT 27-2

Location of Controls and Control Panel of the Geoprobe® Model 6600

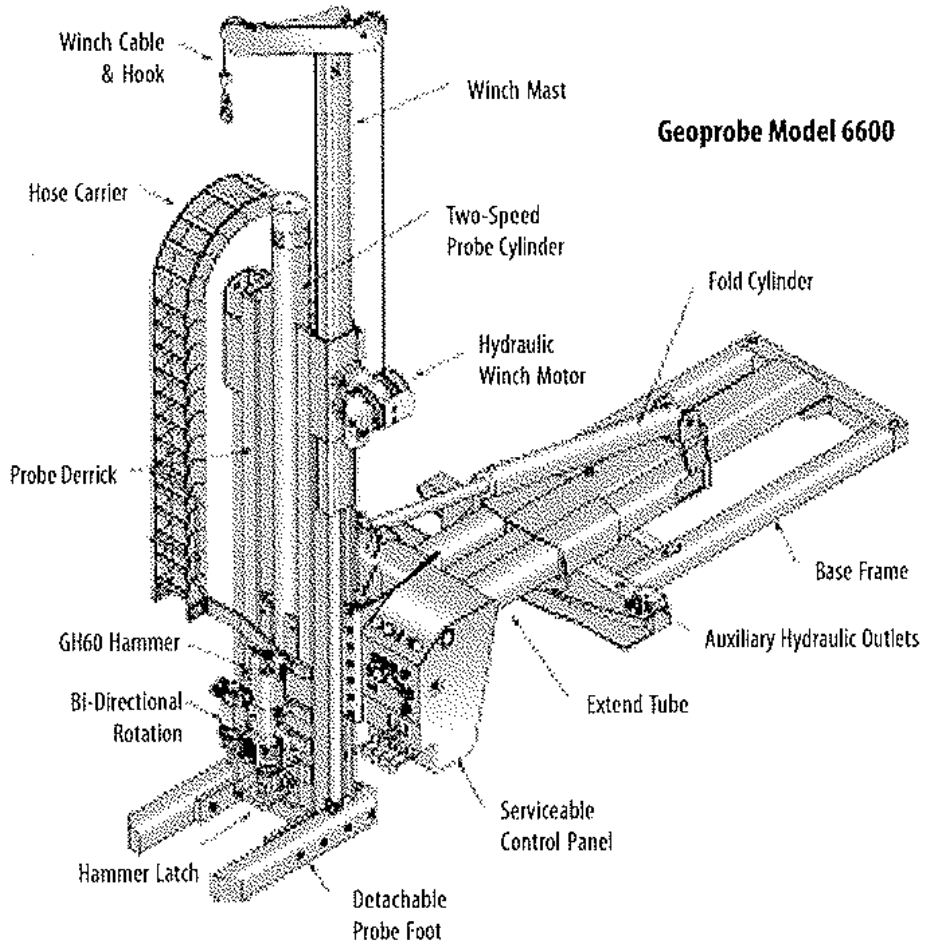

EXHIBIT 27-3
Master Switch

The Master Switch is mounted on the cab floor just inside of the driver-side door.

EXHIBIT 27-4
Emergency Stop Button

Picture of Geoprobe Model 6600 Series Control Box

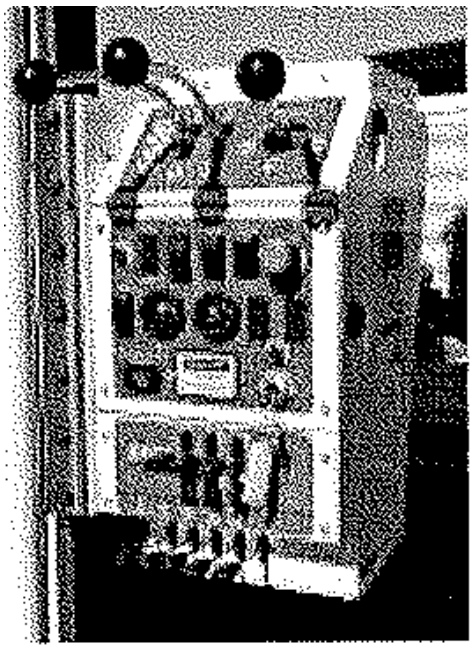

Generalized Diagram of Geoprobe Control Box

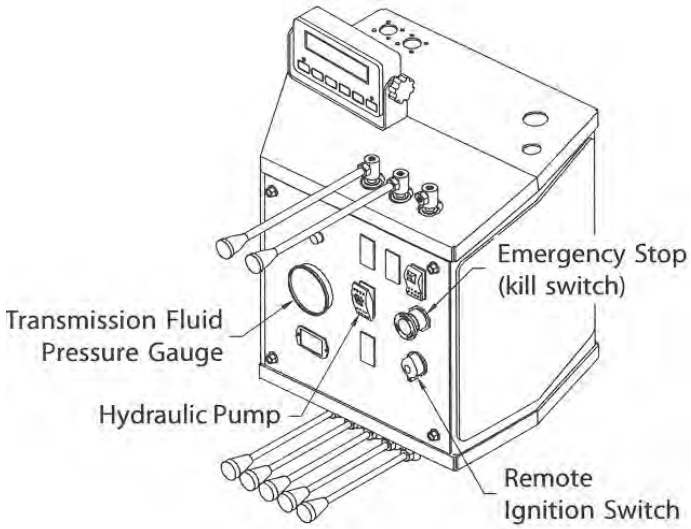

EXHIBIT 27 – 5
Geoprobe Model 6600 - Truck Mounted

Derrick in Vertical Position

EXHIBIT 27 – 6
Raising the Hammer Latch

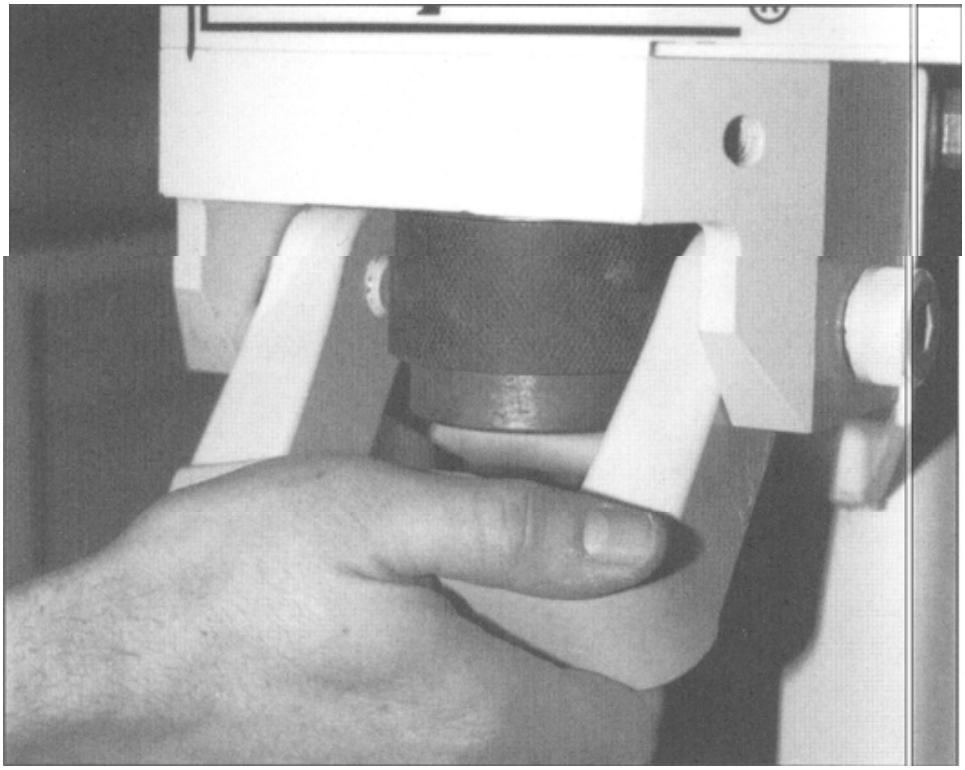

EXHIBIT 27 - 7
Closing the Hammer Latch Under the Pull Cap

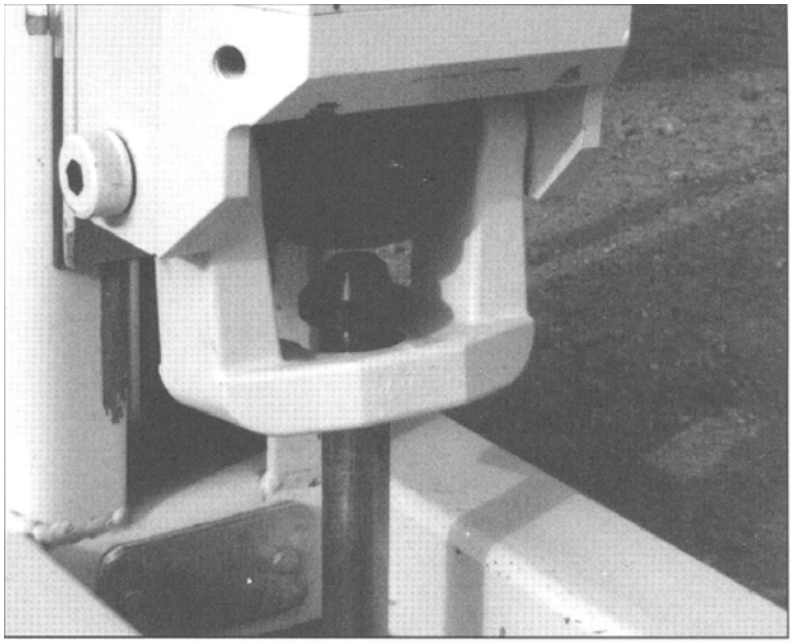

EXHIBIT 27 - 8

Macro-Core ® Open-Tube Sampler Assembly

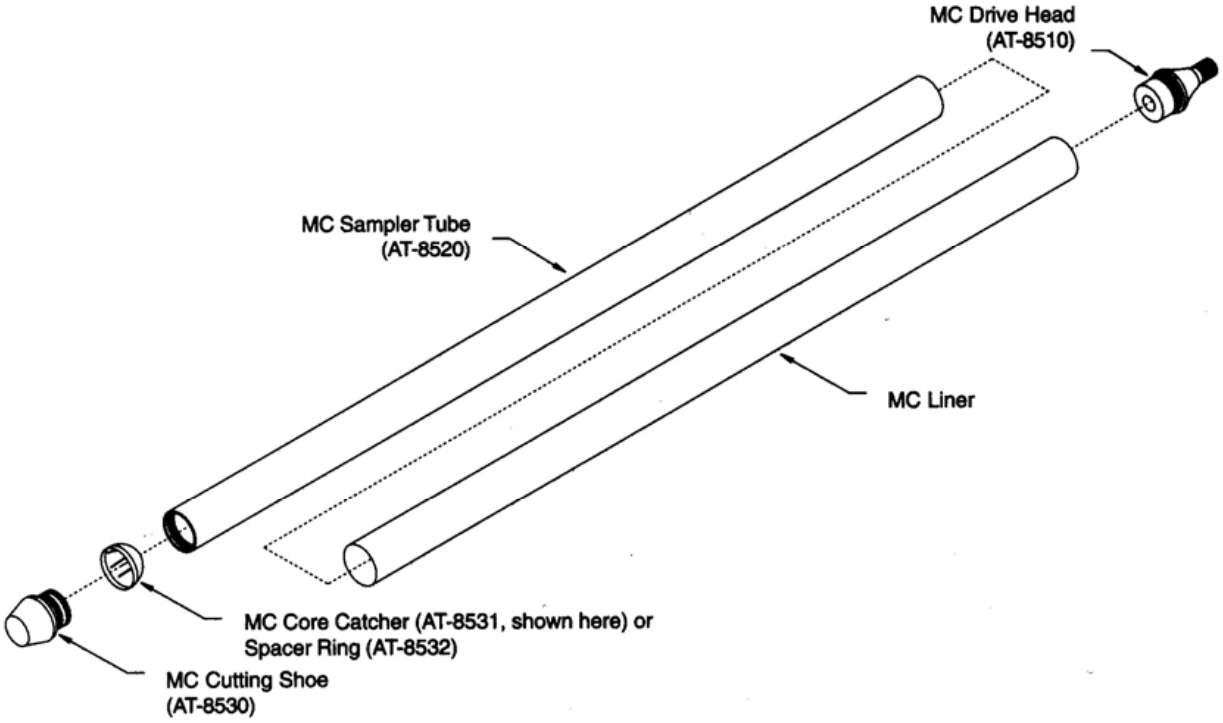

EXHIBIT 27-9
Screen Point Groundwater Sampler

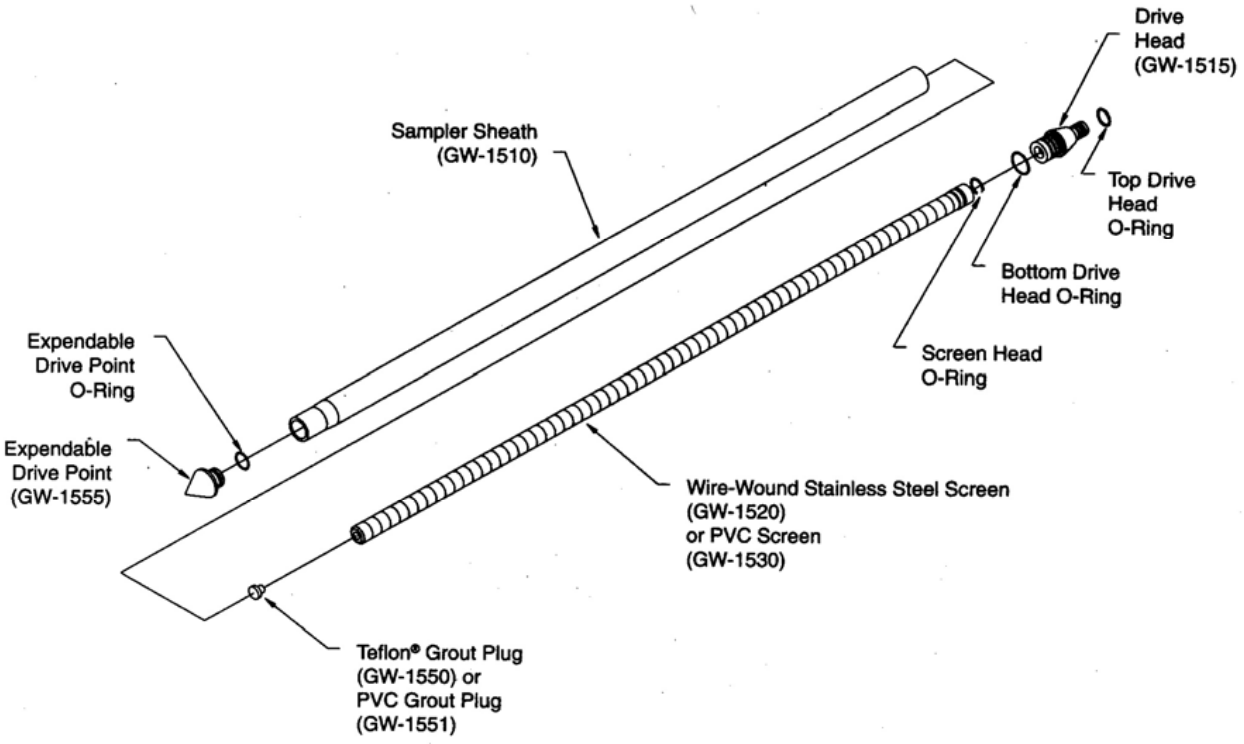

EXHIBIT 27-10
Mill Slot Groundwater Sampler

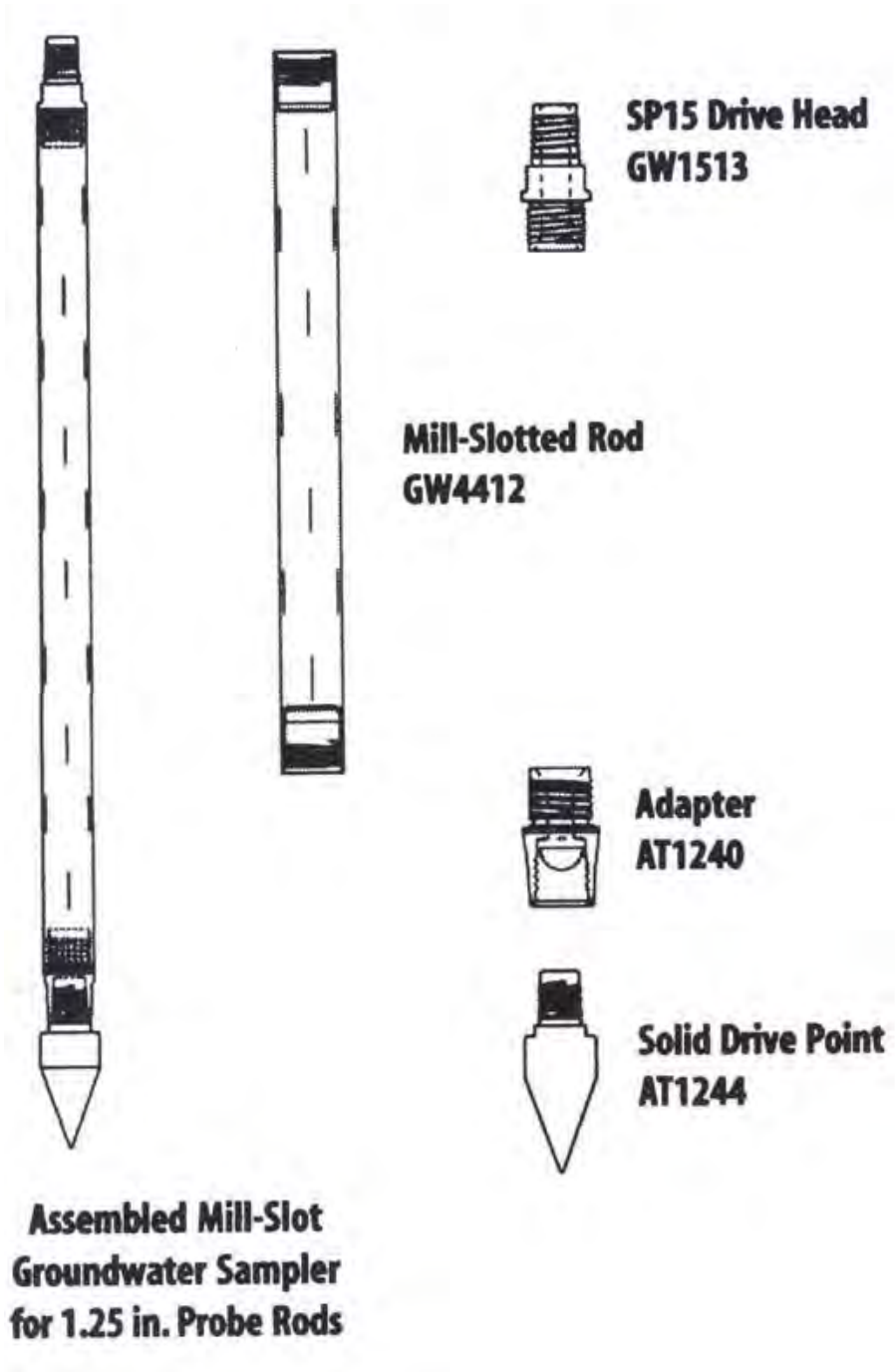

STANDARD OPERATING PROCEDURE 36

BOREHOLE GAMMA LOGGING

STANDARD OPERATING PROCEDURE 36

BOREHOLE GAMMA LOGGING

1.0 PURPOSE

This procedure describes the techniques used to conduct a gamma survey of a borehole to log the gamma radiation measurements in subsurface soil.

This procedure provides guidance for the Santa Susana Radiological Background Study. Deviations from the methods presented herein must be approved by the Project Leader and the HydroGeoLogic, Inc. (HGL) Quality Assurance Officer.

2.0 DEFINITIONS AND ABBREVIATIONS

2.1 DEFINITIONS

Anomaly – Gross gamma radiation measurements based on professional judgment that appear to besignificantly different than measurements in the general vicinity. An increase in a gamma measurement of twice the surrounding area will constitute an anomaly; however, a lower threshold may be deemed appropriate depending on the situation.

Equipment – Those items (variously referred to a "field equipment" or "sample equipment") necessary for sampling activities that do not directly contact the samples.

2.2 ABBREVIATIONS

I.D. inside diameter
O.D. outside diameter
PPs Project plans
PVC polyvinylchloride
SOP Standard Operating Procedures

3.0 RESPONSIBILITIES

Field personnel are responsible for performing the applicable tasks outlined in this procedure when conducting work related to environmental projects.

The Project Leader or an approved designee is responsible for checking all work performance and verifying that the work satisfies the applicable tasks required by this procedure. This will be accomplished by reviewing all documents (Exhibits) and data produced during work performance.

4.0 PROCEDURES

4.1 METHODS

Step 1: Select an appropriate meter and detector for making gamma measurements in a borehole. The borehole diameter will limit the detector diameter. In addition, a PVC pipe or similar will be placed into the borehole to protect the detector from borehole collapse. The largest detector that can fit into the PVC pipe should be used to maximize detection sensitivity. The following table summarizes the various detectors with required size of PVC pipe and borehole.

Manufacturer	Detector Model	Detector Size (inch)	Detector O.D. (inch)	Minimum I.D. for PVC Pipe (inch)	Schedule 40 PVC Pipe Nominal I.D. (inch)	Schedule 40 PVC Pipe Nominal Size (inch)	Minimum I.D. of Borehole (inch)
Ludlum	44-62	½ by 1	0.9	1.15	1.380	1.25	1.7
Ludlum	44-2	1 by 1	2.0	2.2	2.469	2.5	2.9
Ludlum	44-11	2 by 2	2.5	2.75	3.068	3	3.5
Ludlum	44-10	2 by 2	2.6	2.85	3.068	3	3.5
Ludlum	44-20	3 by 3	3.27	3.52	4.026	4	4.5

The cable length must be sufficient to enable the detector to reach the bottom of the borehole; e.g. a 10 foot borehole requires a 12 foot cable. Mark the cable at 6-inch interval starting from the center of the detector.

Step 2: Setup the selected meter and detector. Refer to the SOP and/or manufacturer's operation manual for details on the operation of the selected meter and detector. It is important to conduct the field investigation and determine the instrument quality control limits with the length of cable that was used in the calibration (the high voltage is affected by cable length).

Step 3: Measurement will be made in ratemeter and scaler modes; refer to the meter SOP and/or manufacturer's operation manual for details.

Step 4: After completion of borehole, place a PVC pipe inside the hole; the pipe prevent loss of the detector in the event that the hole collapses. The pipe must have an inside diameter sufficient for the detector is move freely in the pipe. The pipe can protrude from the hole as long as the detector can be inserted into the pipe and the length of cable is sufficient for the detector to reach the bottom of the borehole, or else cut the pipe at ground level. The largest pipe that can fit into the borehole should be used so the largest detector possible can be used to increase detection sensitivity.

Step 5: Insert a groundwater lever indicator into the PVC pipe and determine the depth to groundwater, if present. Record the depth; this represents the maximum depth for the bottom of the detector unless the detector and attached cable have been waterproofed.
Step 6: Switch the meter to scaler mode, hold the detector 6 inches above the hole, and take a one minute static integrated measurement. Record the measurement in counts per minute. Do not hold the detector by the cable; attach an appropriate length line securely to the detector for lowering the detector into the PVC pipe.

Step 7: Switch the meter to ratemeter mode and descend the detector into the PVC pipe slowly at a rate of approximately 1-inch per second while observing the count rate (counts per minute). As the detector is descending stop if the rate starts to increase, this may indicate the presence of an anomaly. Record elevated readings with the associated depth. Stop at 6-inches below ground surface (bgs) and take a one minute static integrated measurement with the meter in scaler mode. A measurement at ground surface does not provide relevant data due to variable geometry. The count rate will likely increase due to geometric effects of the subsurface—this is normal. Professional judgment will be used to determine if geometric affects are the cause for increased measurements at the first interval at 6-inches below ground
surface or at the bottom of the borehole.

Step 8: Repeat Step 6, stopping at each 6-inch interval until the bottom of the borehole is reached. The last measurement at the bottom may be slightly elevated due to geometric affects.

Step 9: After completion of gamma logging, measurements can be reviewed to determine the location of potential anomalies.

Step 10: Record the measurements in a field logbook.

Step 11: The detector may come in contract with the soil at the bottom of the borehole, thus should be appropriately cleaned before measurement of a subsequent borehole.

4.2 REVIEW

The Project Leader or designee shall check the field log books for completeness and accuracy. Any discrepancies in these documents will be noted and returned to the originator for correction. The reviewer will acknowledge that corrections have been incorporated by signing and dating in the appropriate manner.

5.0 REFERENCES

See applicable manufacturer's operation manual.

APPENDIX B

FIELD FORMS

This page was intentionally left blank.

DAILY FIELD REPORT

Name/Initials:	Date:
Start Time:	Project Name:
Stop Time:	Project/Billing No.:
Work Performed (e.g. DPT Locations Completed)**:**	
Radiation Conditions Encountered	
Deviations from Schedule**:**	
Deviations from Approved Plans/Procedures**:**	
Names of Field Crew (C) / Visitors (V)**:**	
Problems Encountered**:**	
Comments / Miscellaneous**:**	

FIELD SAMPLING REPORT

LOCATION:	**PROJECT NAME:**
SITE:	**PROJECT No.:**

SAMPLE INFORMATION

SAMPLE ID:	**DATE:** **TIME:**
MATRIX TYPE:	**Enter sample numbers below for QC samples and/or blanks associated with this sample:**
SAMPLING METHOD: **(Circle one below)** B / BR / CS / G / H / HA HP / SP / SS	MATRIX SPIKE (MS): _____ MATRIX SPIKE DUP (SD): _____ FIELD DUP (FD): _____
SAMPLE BEG. DEPTH (FT): **SAMPLE END DEPTH (FT):** GRAB ( ) COMPOSITE ( )	AMBIENT BLANK (AB): _____ EQUIPMENT BLANK (EB): _____ TRIP BLANK (TB):

CONTAINER SIZE/TYPE	CONTAINER #	PRESERVATIVE PREPARATION	ANALYTICAL METHOD	ANALYSIS

NOTABLE OBSERVATIONS

PID READINGS	SAMPLE CHARACTERISTICS	MISCELLANEOUS
1st:	COLOR:	
2nd:	COLOR:	
	OTHER:	

PHYSICAL PARAMETERS

Temperature _____(ºC) Dissolved Oxygen _____(mg/L) Specific Conductivity _____(UMHOS/CM)

Iron _____(mg/L) pH _____ Turbidity _____ Oxidation/Reduction Potential _____(mv)

GENERAL INFORMATION

WEATHER: SUN/CLEAR _____ OVERCAST/RAIN _____ WIND DIRECTION _____

AMBIENT TEMPERATURE _____

SHIPMENT VIA: FEDEX _____ HAND DELIVER _____ COURIER _____

OTHER _____

SHIPPED TO: _____

COMMENTS: _____

SAMPLER: **OBSERVER:**

MATRIX TYPE CODES		SAMPLING METHOD CODES	
DC=DRILL CUTTINGS	SL=SLUDGE	B=BAILER	HA=HAND AUGER
WG=GROUNDWATER	SO=SOIL	BR=BRASS RING	HP=HYDRO PUNCH
SH=HAZARDOUS SOLID WASTE	SW=SWAB/WIPE	CS=COMPOSITE SAMPLE	SP=SUBMERSIBLE PUMP
WS=SURFACE/WATER	GS=SOIL GAS	G=GRAB	SS=SPLIT SPOON
LH=HAZARDOUS LIQUID WASTE	SE=SEDIMENT	H=HOLLOW STEM AUGER	

BORING LOG

Borehole ID: _____
Sheet _____ of ____

AFIID		LOCID		
Project Name	Project Number	LTCCODE	Site ID	LPRCODE (IRPIMS)
Drilling Company DRL Code	Driller	Ground Elevation	Total Drilled Depth	EXCODE
Drilling Equipment / Drill/Excav Method / Borehole Diameter		Date/Time Drilling Started	Date/Time Total Depth Reached	
Type of Sampling Device		Water Level (bgs) First/Final	Site Name	
Sample Hammer Type / Driving Wt. / Drop		Hydrogeologist	Checked by/Date	SITEXREF

Depth	Interval	Recovery	Blow Counts	Description (Include lithology, grain size, sorting, angularity, Munsell color name & notation, minerology, bedding, plasticity, density, consistency, etc., as applicable)	USCS Symbol	Lithology	Water Content	Remarks (Include all sample types & depth, odor, organic vapor measurements, etc.)

BORING LOG (cont'd)

Borehole ID: _____
Sheet _____ of ____

Project Name	Project Number	Location

Depth	Interval	Recovery	Blow Counts	Description (Include lithology, grain size, sorting, angularity, Munsell color name & notation, minerology, bedding, plasticity, density, consistency, etc., as applicable)	USCS Symbol	Lithology	Water Content	Remarks (Include all sample types & depth, odor, organic vapor measurements, etc.)

CHAIN OF CUSTODY RECORD

HGL HydroGeoLogic, Inc
Northway 10 Executive Park
313 Ushers Road
Ballston Lake, NY 12019

Client:

Project Name/No.:

Project Manager:

Sampler:

Phone: (518) 877-0390 Fax: (518) 877-0414

APPLICABLE REGULATION

- ☐ RCRA
- ☐ ECRA
- ☐ CERCLA
- ☐ NPDES
- ☐ CWA
- ☐ SDWA
- ☐ OTHER

SAMPLE IDENTIFICATION	DATE COLL.	TIME COLL.	GRAB	COMPOSITE	MATRIX: SOIL	MATRIX: WATER	MATRIX: OTHER	TOTAL NO. OF CONTAINERS	ANALYSIS REQUIRED								REMARKS OR SAMPLE LOCATION

Special Instructions

Possible Hazard Identification
☐ Non-Hazard ☐ Flammable ☐ Skin Irritant ☐ Poison B ☐ Unknown

Sample Disposal
☐ Return to Client ☐ Disposal by Lab ☐ Archive for _____ Months

Turn Around Time Required
☐ Normal ☐ Rush

QC Level
☐ I. ☐ II. ☐ III.

Project Specific (specify)

1. Relinquished by	Date	Time	1. Received by	Date	Time
2. Relinquished by	Date	Time	2. Received by	Date	Time
3. Relinquished by	Date	Time	3. Received by	Date	Time

Comments

APPENDIX C

TECHNICAL MEMORANDUM
RADIOLOGICAL TRIGGER LEVELS

This page was intentionally left blank.

TECHNICAL MEMORANDUM
RADIOLOGICAL TRIGGER LEVELS
SANTA SUSANA FIELD LABORATORY SITE
AREA IV RADIOLOGICAL STUDY

TO:	Andrew Bain, USEPA Region 9 RPM
FROM:	Shannon Thompson, PhD., HGL Principal Radiological Scientist
THROUGH:	L. Steven Vaughn, HGL Project Manager
CC:	Mary Aycock, USEPA Region 9 RPM S. J. Chern, USEPA Region 9 RPM Gregg Dempsey, USEPA Senior Science Advisor
DATE:	December 16, 2011
SUBJECT:	Proposed radiological trigger levels strategy for use in evaluating soil sample results and recommending Lookup Table values to DTSC for remediation of soil
CONTRACT NO:	EP-S7-05-05
TASK ORDER NO:	0038

1.0 INTRODUCTION

HydroGeoLogic, Inc. (HGL) is performing a radiological characterization study at Area IV and the Northern Buffer Zone of the Santa Susana Field Laboratory (SSFL) site located in Ventura County, California. This work is being executed under U.S. Environmental Protection Agency (USEPA) Region 7 Architect and Engineering Services Contract EP-S7-05-05, Task Order 0038. The technical lead on the project is EPA Region 9.

This technical memorandum describes the conceptual framework for, approach to, and implementation of radiological trigger levels (RTLs). These are reference concentrations for the radionuclides of concern for the SSFL Area IV Radiological Study. They are designed for screening analytical results of site soil and sediment collected during Round 1 sampling and analysis efforts to inform decisions for Round 2 sampling (also called step-out sampling). Individual Round 1 analytical results will be compared to RTLs, and, if results exceed an RTL, then step-out sampling or other actions are warranted. Thus, RTLs guide Round 2 sampling to support the determination of the nature and extent of radiological contamination in Area IV.

RTLs have two purposes:

- First, they inform step-out sampling. "Step-out" denotes sampling and analysis in the vicinity of a positive contamination result to bound the extent of contamination (sample locations added are generally proximate to the original sample location(s)). To determine step-out sample locations, the RTL approach must be resolved expeditiously to meet the Radiological Study schedule. The Radiological Study commenced field

activities and soil sampling in Subarea 5C; hence, analytical results from Subarea 5C are the first Round 1 data available. Subarea 5C Round 2 sampling must have actionable soil concentration limits established by December 2011 to conclude the USEPA Round 2 investigation in a timely manner.

- Second, RTLs will be ultimately be submitted to the California Department of Toxic Substances Control (DTSC) as USEPA's recommended radiological Lookup Table concentrations. The RTL values discussed herein and used for screening Subarea 5C Round 1 results could potentially be modified based on outcomes of screening Subarea 6 results. If accepted by DTSC, RTLs will serve as clean up values during the remedial phase of the project. The promulgation of final radiological and chemical Lookup Table values has been scheduled for the spring of 2012.

Screening site data using RTLs is an objective assessment process. Considering the importance of RTLs to remedial actions and the very low analytical detection limits of the Radiological Study, part of the development process is to use RTLs to screen soil results from Subareas 5C and 6. These Subareas are expected to represent lower and higher contamination areas, respectively. This expectation is based on operational history and multiple lines of evidence used to select Round 1 sample locations. As an example, 30 gamma radiation anomalies were observed (out of a total of 59 potential gamma radiation anomalies[1]) from the field gamma survey data collected in Subarea 6 whereas none were observed in Subarea 5C. Subarea 6 was the site of the Sodium Reactor Experiment which contained and generated much greater quantities of radioactive materials than the facilities located in Subarea 5C.

The intention of this exercise is to examine the usefulness of RTLs and evaluate challenges which may arise through data screening using RTLs to form a rigorous and reliable screening process. As the USEPA gains experience through the application of RTLs to Radiological Study analytical results, modifications to either the RTLs or to proposed RTL exceedance response criteria may be necessary to meet project requirements.

2.0 OBJECTIVE

The ultimate goal of the RTLs is to provide concentration limits for the radionuclides of concern that define the nature and extent of radiological contamination on site and effectively guide the remediation process with respect to radiological contaminants. This Technical Memorandum is not applicable to chemical contamination which is being addressed separately by DTSC.

The RTLs are being developed as an approach that balances the benefits of removal of contaminated soils versus removal of soils containing only naturally occurring radionuclides which may not be indicative of site activities. Importantly, naturally occurring radionuclides are present in all soil and sediment samples; the key factor is to confidently identify locations

[1] The terms potential gamma anomaly and gamma anomaly are used to describe gamma radiation survey findings. A *potential* gamma anomaly denotes an area of elevated total gamma measurement data; a *gamma anomaly* is an area containing elevated gamma measurements which have been verified to contain man-made radionuclides.

which were deemed to be contaminated as a result of Area IV site operations. As described in the Administrative Order on Consent (AOC), individual analytical results that exceed a Lookup Table value may be cause for step-out sampling and subsequent remedial action.

3.0 DEVELOPMENT OF RADIOLOGICAL TRIGGER LEVELS

The RTLs are based on information and guidance from the Radiological Background Study, the AOC, and the technical capabilities of Radiological Study laboratories for each radionuclide of concern. Each of these has some influence in shaping the development of RTLs.

3.1 RADIOLOGICAL BACKGROUND STUDY

USEPA's Radiological Background Study was conducted to determine local background concentrations as a part of the development of SSFL Lookup Tables (HGL, 2011). During the Radiological Background Study, 149 surface and subsurface soil samples were collected and analyzed to determine concentrations of the Radionuclides of Concern from unimpacted areas representative of the Radiological Study area native soil in terms of geology, soil type, vegetation, and topography. The results of 68 Radionuclides of Concern for up to 149 samples[2] were compiled and statistically evaluated. These pools of data were used to compute Background Threshold Values (BTV) for 64 radionuclides using the 95 % Upper Simultaneous Limit (USL) and to develop the criteria defined in the Radiological Background Study Report (HGL, 2011). The 95 % USL was employed to address variability in concentration distributions of radionuclides of concern and to reduce the number of false positives that may be expected in comparisons between site data and background data.

3.2 PURPOSE OF RADIOLOGICAL TRIGGER LEVELS

USEPA initially included the 10^{-6} agricultural Preliminary Remediation Goals (PRGs) in RTLs criteria development and discussed the criteria in a September 2011 public meeting. On October 20, 2011, USEPA sought guidance from DTSC on the issue of using PRGs for the 10^{-6} agricultural risk scenario, as recommended in the USEPA Radiological Background Study Report. DTSC's response (Attachment 3) citing the AOC states "there is no provision for using risk based factors in the development of our lookup tables." Using BTVs and MDCs alone would result in remediating to levels below the agricultural 10^{-6} PRG for approximately 25 percent of the radionuclides of concern. USEPA understands that excluding PRGs (which are risk-based) from the RTL table will result in more sample results exceeding an RTL, which would result in additional characterization and, potentially, additional remedial efforts. The full impact of this point is unknown at this time. USEPA will consult the PRG combined with method uncertainty as an screening result evaluation tool, particularly for cases of slight exceedances of NORM.

The purpose of EPA's SSFL Area IV Radiological Study is to determine radiologically contaminated areas in Area IV and the NBZ; however, there are inherent limitations in determining RTLs. For example, BTVs were defined using as many as 149 sample data and are a function of the statistical cohesiveness of the background study data for each

[2] Not all radionuclides have 149 results due to various reasons, such as logistical and quality concerns.

radionuclide. For many radionuclides, an analytical laboratory cannot reasonably measure concentrations below its respective BTV in an individual soil sample. In lieu of the capability to detect below the BTV concentration, the Minimum Detectable Concentration (MDC) shall be used as an alternative.

There are circumstances which may require exceptions to Lookup Table values. Native American artifacts which may be recognized as cultural resources can be exempt from the cleanup requirements. Another is the use of professional judgment to interpret data wherein Naturally Occurring Radioactive Materials (NORM) radionuclides may be found in drainages. NORMs are discussed in Section 3.7.

3.3 MINIMUM DETECTABLE CONCENTRATION

The Radiological Background Study used 95 % USL to derive BTVs. Similarly, MDC values were derived using an upper confidence limit and computed using the mean MDC plus two standard deviations above the mean which approximate the 95 % Upper Confidence Limit (UCL) for each MDC. Representative analytical results from each radiochemistry laboratory (40 samples for Laboratory A, and 48 samples for Laboratory B) were assembled and the arithmetic means and standard deviations of each MDC were calculated for each laboratory. Use of a UCL is necessary for comparisons of individual result MDCs to RTLs. For example, if the mean MDC value was selected as an RTL instead of the 95 % UCL, then analytical results from uncontaminated samples would exceed that value approximately 50 percent of the time. Hence, RTL development using the 95 % UCL of MDCs adds confidence that a result exceeding the RTL is meaningful.

The RTL is based on the higher of two Radiological Study laboratory MDCs. Neither laboratory alone has the analytical production capacity required to support the project schedule, so sample analysis must be conducted by both laboratories. USEPA recognizes that USDOE will need support from radiological laboratories during the remedial phase of the project, and those laboratories will also be required to achieve the sensitive radiological MDCs used in this study.

3.4 PROCESS TO DEVELOP RADIOLOGICAL TRIGGER LEVELS

Development of RTLs must consider and account for several factors, such as the variability in distributions of both man-made and naturally occurring Radionuclides of Concern, technical limitations, and inclusion of the measurement uncertainty of individual sample data for comparison against RTLs.

Figure 1 illustrates the two step process for development of RTLs. The first step illustrates the formation of an individual RTL. Individual RTLs are formulated from the higher of BTV and MDC data plus the overall method uncertainty for each radionuclide of concern.

RTLs are reference concentrations computed from pools of data. To optimize RTLs and minimize decision errors, overall method uncertainties must be factored into RTL development. Consideration of overall method uncertainty in RTLs is not the same as adding

or subtracting the individual sample-specific uncertainty from a result before comparing to the RTL. In the former case, the method uncertainty (not the sample-specific uncertainty) is recognized as a legitimate constraint to minimizing decision errors. In the latter case, laboratory error or poor quality results might be used to assert that the BTVs have not been exceeded. The magnitudes of radiochemistry method uncertainties range from approximately 1 to 16 percent of the RTL. While an increase of 16 percent is not insignificant, these are relatively small. In fact, DTSC discussed chemical Lookup Table development challenges including chemical Method Detection Limits and Reporting Limits (analogous to radiological MDCs and RTLs). For chemical contaminants, the Reporting Limits are typically 3 to 5 times Method Detection Limits or 300 to 500 percent.

The second step of the RTL development process is to apply RTLs to screen onsite results from Subareas 5C and 6. To do this, validated radiological soil results will be evaluated against each RTL, for up to approximately 56 radionuclides based on the total number of analyses requested for each sample location. Individual RTL values may require adjustment or additional logic to be effective. In essence, step 2 is a process quality check. Final RTLs will be applied to all Round 1 analytical results to inform Round 2 sampling.

Table 1 (see Attachment 1) lists the radionuclide, analytical method, suite, and concentration values for RTLs composed of BTVs and MDCs. The key illustrates certain analytes which are NORM radionuclides (highlighted in green) and those radionuclides for which the Background Study recommended use of the MDC (highlighted in blue).

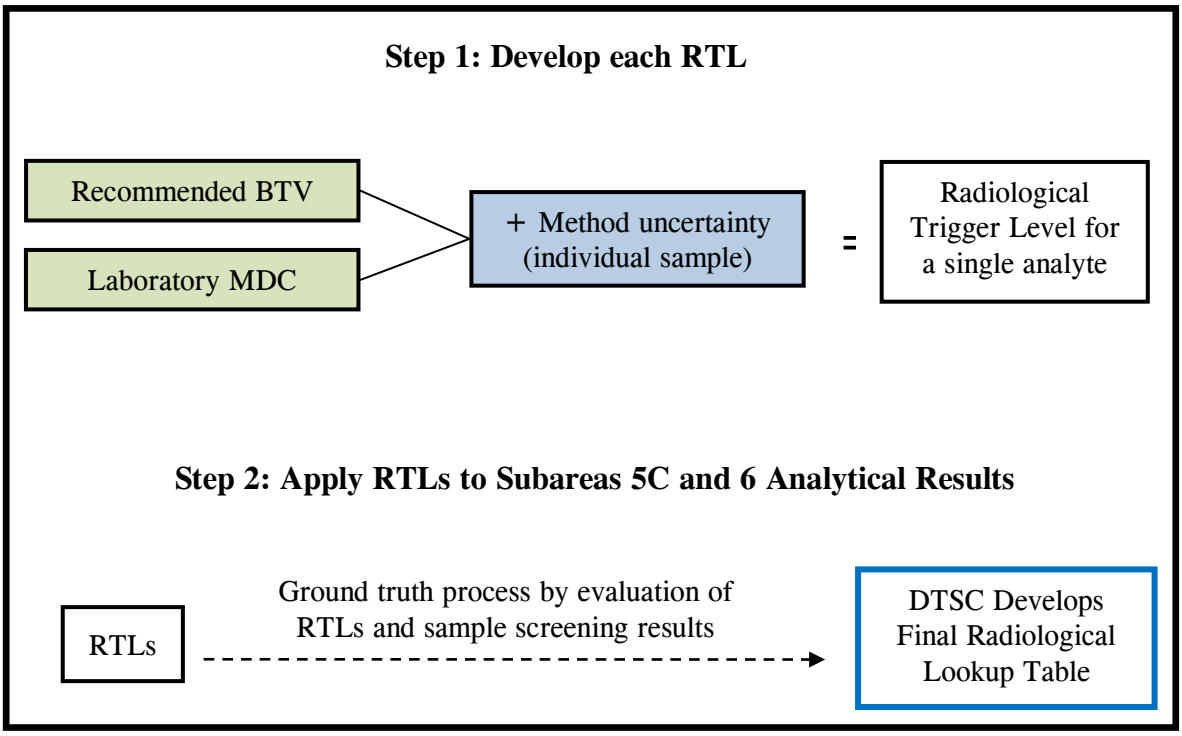

Figure 1
Strategy for the development of Radiological Trigger Levels

3.5 USE OF RADIOLOGICAL TRIGGER LEVEL CONCENTRATIONS TO SCREEN ANALYTICAL RESULTS

Radiochemistry data consist of a large amount of information including sample identifiers (sample number, location, sample depth, time of collection, etc.), internal tracking information, and results parameters. The key analytical results are concentration, reporting units (e.g., picocuries per gram), MDCs, uncertainty, and data qualifiers. Together, these provide information regarding data quality and quantify the analytical result. Screening of analytical data is a relatively straightforward process. The initial step is to determine whether a radionuclide of concern has been detected. This is based on a positive activity result being greater than its associated MDC. If a positive analytical result occurs, then it is compared to the RTL.

Figure 2 is a decision tree logic diagram showing actions to be taken or considered based on analytical data screening results. The questions posed in this diagram are incorporated in the screening process to inform Round 2 targeted sampling, with one exception. Exceedances of man-made radionuclides will require step out sampling; however stepping out for NORM radionuclides is less clear. Considerations for NORM radionuclides are discussed in Section 3.7. Figure 2 illustrates cases in which detected results exceed or do not exceed an RTL. It also shows the nuanced case in which the initial criterion is not detected yet the sample-specific MDC exceeds the RTL. This is a special case where the laboratory analytical protocol fails; in the figure, the resulting action shown is reanalysis. It is possible that reanalysis would not

resolve the issue, due to spectral interference or other similar challenges. Those findings will be dealt with on a case-by-case basis.

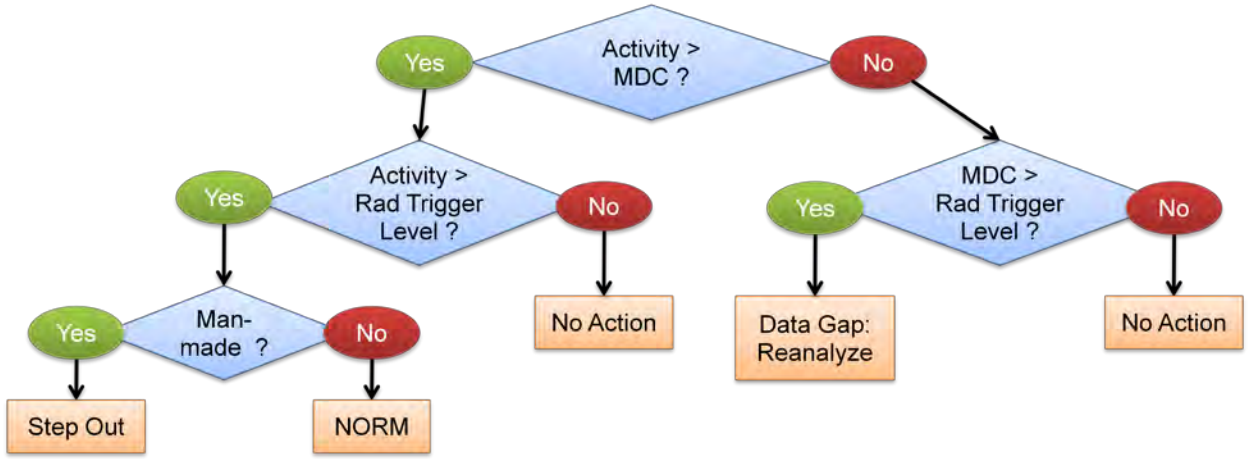

Figure 2
Analytical Result Decision Tree

Table 2 shows key analytical data with RTL screening criteria. There are multiple analytes for each sample; in this example, excerpted laboratory results for six radionuclides are listed alphabetically from protactinium-231 (Pa-231) to plutonium-239 and 240 (Pu-239/Pu-240) to demonstrate radioanalytical data screening. The four columns at left contain sample identity, radionuclide of concern, reported activity and associated MDC. The columns are right address the questions illustrated in Figure 2. The first criterion condition answers the question, was a radionuclide of concern detected? Detected results are then compared to their respective RTL concentrations. If an analyte is detected at a concentration which exceeds the RTL, then it is noted and the magnitude of exceedance or ratio is calculated. As shown in Table 2, lead-212 (Pb-212) and lead-214 (Pb-214) were detected at concentrations below their respective RTLs. This is expected because these are NORM radionuclides present in soil. At the bottom of the table, Pu-239/Pu-240 was detected above the RTL. The next criterion refers to a data gap which is the condition of a sample for which activity was not detected, but the MDC exceeded the RTL. In this example, no data gaps were observed.

Table 2
Analytical Data Screening Example

Field Sample ID	Analyte Name	Activity	MDC	Detected? (Activity > MDC)	Radiological Trigger Level (RTL)	Detected Above RTL	Detected Activity /RTL	Data Gap MDC > RTL	Data Gap MDC /RTL
10242	Pa-231	0.009	0.61		9.36E-01				
10242	Pb-212	1.74	0.025	Yes	2.69E+00				
10242	Pb-214	1.1	0.027	Yes	1.70E+00				
10242	Pu-236	-0.0015	0.0064		7.79E+00				
10242	Pu-238	0.0044	0.0036	Yes	4.15E-02				
10242	Pu-239/Pu-240	0.0486	0.0013	Yes	4.04E-02	Yes	1.203		

Notes:
ID – identification
Pu-236 – plutonium-236
Pu-238 – plutonium-238

3.6 SUBAREA 5C RADIOLOGICAL TRIGGER LEVELS SCREENING RESULTS

Validated data sets for Subarea 5C are nearly complete at present and those for Subarea 6 are in progress, so screening results are limited to *preliminary data from Subarea 5C*. However, based on discussions with project data validators, both the RTL values and the key analytical results discussed in this report are not expected to change. Table 3 shows the summary results from RTL screening of Subarea 5C. For convenience, NORM radionuclide analytes are highlighted in green and anthropogenic (man-made) analytes are in red. The findings indicate three samples with five radionuclides exceed the RTLs. No data gaps are observed.

Table 3
Preliminary Subarea 5C Screening Summary using RTLs

Field Sample ID	Analyte Name	Activity	MDC	Detected? (Activity > MDC)	Radiological Trigger Level (RTL)	Detected Above RTL	Detected Activity /RTL	Data Gap MDC > RTL	Data Gap MDC /RTL
10045	Bi-214	1.72	0.031	Yes	1.59E+00	Yes	1.08		
10045	Pb-214	1.95	0.031	Yes	1.70E+00	Yes	1.15		
10045	Th-230	2.24	0.008	Yes	2.20E+00	Yes	1.02		
10081	Cs-137	0.818	0.015	Yes	2.07E-01	Yes	3.95		
10242	Pu-239/Pu-240	0.0486	0.0013	Yes	4.04E-02	Yes	1.20		
3		**Count**		**4967**		**5**		**0**	

Notes:
Bi-214 – bismuth-214
Cs-137 – cesium-137
Th-230 – thorium-230

3.7 IMPLEMENTING RADIOLOGICAL TRIGGER LEVELS DURING ROUND 2 SAMPLING

Figures 3 through 6 (Attachment 2) are maps illustrating the spatial distribution and concentrations of elevated Subarea 5C preliminary results. Figure 3 shows all Subarea 5C sample locations and analytical results relative to the RTLs. Three samples exceed RTL concentrations; on Figure 3, two locations having man-made RTL exceedances are symbolized as red circles and the location with a NORM exceedance is depicted as a green circle (consistent with the color highlights in Table 3). These are shown individually in proximal views in Figure 4 – 6 along with site investigation data from gamma scanning results, geophysical results, and HSA features. Figure 4 shows the result of sample 10081 which has Cs-137 present at four times the RTL. Figure 5 shows the result of sample 10242 which has Pu-239/Pu-240 present at 1.2 times the RTL. In Figure 6, sample 10045 indicates three NORM radionuclides exceed their RTLs. It is critically important to understand that all three of these particular NORM radionuclides are members of the same decay series and are relatively close to their respective RTL values.

Based on screening against the RTLs, results from sample locations 10081 and 10242 will require step out sampling to adequately characterize the extent of contamination. Although the activities observed for sample 10045 (for all three radionuclides) are above the RTLs, this sample may not require step out sampling. The logic and professional judgment underlying this position are described in the following passages. Each of these NORM radionuclides is members of the same decay series (U-238), and there is evidence they may reflect site conditions.

NORM radionuclides are of interest because they are present in soils, sediment, and rock in the earth's crust (Faw and Shultis, 1999). They are primordial - they were present in the geological materials when the rocks first formed. There are two types of naturally occurring radionuclides in soil, those occurring singly and those occurring as a part of a decay series. The only significant singly occurring NORM radionuclide is potassium-40. Three primordial decay series ubiquitous in rocks and minerals originate from thorium-232, uranium-235, or uranium-238. Thus, these radionuclides and their decay progeny are present in rocks and soil on site. The main purpose of the Radiological Background Study was to determine concentration ranges of both naturally occurring and fallout (anthropogenic) radionuclides and establish BTVs to represent reasonable upper bounds for concentrations of each radionuclide in unimpacted areas.

The background study demonstrated that radionuclides are present in unimpacted areas at ranges of concentrations with some degree of variability. It is possible that a radionuclide or several radionuclides could be observed above RTLs and not be due to Area IV radiological operations. To bound this discussion, if a NORM radionuclide exceeded its RTL by a factor of say 3 or 10, then it is logical to assume this would indicate an impacted area. On the other hand, an RTL exceedance for NORM of 1 - 15 % may not.

There are several radionuclides in decay series which should be compared to neighboring radionuclides (within a series) to assess whether analytical results are logical. Checking and comparing results from individual members of a decay series allows flexibility to make professional judgments based on the data as a whole rather than a singular exceedance. Data quality assessments are frequently performed to assess the data quality from a particular laboratory, to examine differences between specific methods, or to inter-compare results between different laboratories. For example, the fact that all three NORM radionuclides observed in sample 10045 are members of the same decay series supports the idea that this result may reflect site conditions. For two of these, Bi-214 and Pb-214, they exceed their respective RTLs by 8 and 12 %; however they are orders of magnitude below their 10^{-6} Agricultural PRGs.

Professional judgments are supported by the investigation of site related activities and other lines of evidence. Importantly, sample 10045 was located coincident to the site of potential gamma radiation anomaly 5C-3, which was a vernal pool area near sandstone rock outcrops and not particularly near former site facilities or HSA features. Gamma scanning results indicates the area to the immediate south and west of sample 10045 has high gamma measurements of NORM radionuclides. In fact, the potential gamma anomaly shown as red in Figure 6 covers virtually the entire extent of the vernal pool area; hence the soil sample was collected adjacent to the biological exclusion zone. Historical Site Assessment data indicate that the storage yard for Building 4626 was in the general vicinity, but indicated storage of primarily europium-152 and cobalt-60 bearing sands and USDOEs not indicate storage of thorium bearing wastes nor chemical separation operations.

USEPA will exercise the type of professional judgments described above and similar evaluation tools to justify decisions for selecting and locating step-out samples. The slight exceedances of naturally occurring Th-230, Bi-214, and Pb-214 would not merit further investigation by USEPA.

It is possible that an RTL employed during the Radiological Study may differ from its final Lookup Table value. Under this scenario, an information gap may exist for individual sample locations or for a radionuclide should the concentration used to determine step out sample locations for the Radiological Study be greater than the corresponding final Lookup Table value.

4.0 CONCLUSIONS

RTLs are composed of BTV and MDC concentration values per DTSC direction. The RTLs will be tested by application to selected Subarea 5C and 6 soil samples. Subarea 5C represents lower levels of radionuclide contamination and Subarea 6 represents higher levels of radionuclide contamination; therefore, these are believed to be suitable datasets for testing the RTLs. Exceedances of man-made radionuclides will, in general, prompt the need for additional sampling. Observations of slight RTL exceedances of naturally occurring radionuclides may require professional judgments and further data review to determine whether

step-out sampling is warranted. Specific sampling locations will be discussed in forthcoming Subarea FSP Round 2 Addenda.

5.0 REFERENCES

Faw, R. E. and J. K. Shultis, 1999. Radiological Assessment: Sources and Doses. American Nuclear Society, Inc., La Grange Park, IL.

HydroGeoLogic, Inc., 2011. Final Radiological Background Study Report, Santa Susana Field Laboratory, Ventura County, California. October 31.

State of California Environmental Protection Agency, Department of Toxic Substances Control, 2010, Administrative Order on Consent for Remedial Action, Ventura County, California. December 6.

ATTACHMENTS

Attachment 1	Draft Radiological Trigger Levels Table	
Attachment 2	Figure 3	Preliminary 5C RTL Screening Findings
	Figure 4	Preliminary 5C RTL Screening Result With Associated Data for Sample 10081
	Figure 5	Preliminary 5C RTL Screening Result With Associated Data for Sample 10242
	Figure 6	Preliminary 5C RTL Screening Result With Associated Data for Sample 10045
Attachment 3	DTSC position response to use of PRGs in development of RTLs	

ATTACHMENT 1

TABLES

Table 1 DRAFT Radiological Trigger Levels Table

Table 1
Radiological Trigger Levels Table

Radionuclide	Method	Suite	Source (BTV-MDC)	RTL [1] (BTV-MDC)
actinium-227+D	Gamma	Default	MDC	2.17E-01
actinium-228			BTV	2.40E+00
antimony-125+D			BTV	3.54E-01
bismuth-212			BTV	2.15E+00
bismuth-214			BTV	1.59E+00
cadmium-113m			BTV	3.03E+03
lead-212			BTV	2.69E+00
lead-214			BTV	1.70E+00
cesium-134			MDC	8.64E-02
cesium-137+D			BTV	2.07E-01
cobalt-60			MDC	2.80E-02
europium-152			MDC	5.66E-02
europium-154			MDC	1.50E-01
europium-155			BTV	2.31E-01
holmium-166m			BTV	4.32E-02
neptunium-236			MDC	4.70E-02
neptunium-239			MDC	1.39E-01
niobium-94			MDC	2.14E-02
potassium-40			BTV	3.24E+01
protactinium-231			BTV	9.36E-01
sodium-22			MDC	3.70E-02
tellurium-125m			BTV	8.38E-02
thallium-208			BTV	9.37E-01
thulium-171			BTV	7.24E+01
tin-126			MDC	2.37E-02
strontium-90+D (Y-90)	Sr-Y	Default	MDC	4.85E-01
thorium-228+D	Th-isotopic	Default	BTV	3.98E+00
thorium-230			BTV	2.20E+00
thorium-232			BTV	3.10E+00
thorium-234			BTV	3.19E+00
thorium-229+D	Th-229	Site Specific	MDC	1.45E-01
uranium-233/234	U-isotopic	Default	BTV	2.02E+00
uranium-235+D/236			BTV	1.51E-01
uranium-238+D			BTV	1.80E+00
uranium-232	U-232	Site Specific	MDC	1.17E-01
plutonium-238	Pu-isotopic	Default	MDC	4.15E-02
plutonium-239/240			MDC	4.04E-02
plutonium-242			MDC	4.06E-02
plutonium-236	Pu-236	Site Specific	MDC	7.79E+00
plutonium-244+D	Pu-244		MDC	3.13E-02
plutonium-241	Pu-241	Site Specific	MDC	1.04E+01
americium-241	Am-241-Cm Isotopic	Default	MDC	4.54E-02
curium-243/244			MDC	4.43E-02
americium-243+D	Am-243-Cm Isotopic	Site Specific	MDC	4.01E-02
curium-245/246			MDC	3.06E-02
curium-248			MDC	3.33E-02
neptunium-237+D	Np-237	Site Specific	MDC	4.01E-02
radium-226+D	Gamma Ra	Site Specific	BTV	2.03E+00
radium-228+D			BTV	2.40E+00
tritium (H-3) organic	H-3	Site Specific	MDC	1.19E+01
carbon-14	C-14	Site Specific	MDC	2.96E+00
iron-55	Fe-55	Site Specific	MDC	5.94E+00
nickel-59	Ni-59	Site Specific	MDC	5.96E+00
nickel-63	Ni-63	Site Specific	MDC	4.92E+00
technetium-99	Tc-99	Site Specific	MDC	1.63E+00
promethium-147	Pm-147	Site Specific	MDC	1.75E+01

Key	1 - RTL values in pCi/g
Naturally Occurring Radionuclides	
Maximum Non-Detect BTV - Use MDC	

ATTACHMENT 2

FIGURES

Figure 3	Preliminary 5C RTL Screening Findings
Figure 4	Preliminary 5C RTL Screening Result With Associated Data for Sample 10081, Location 56
Figure 5	Preliminary 5C RTL Screening Result With Associated Data for Sample 10242, Location 141
Figure 6	Preliminary 5C RTL Screening Result With Associated Data for Sample 10045, Location 33

Figure 3
Preliminary 5C RTL Screening Findings

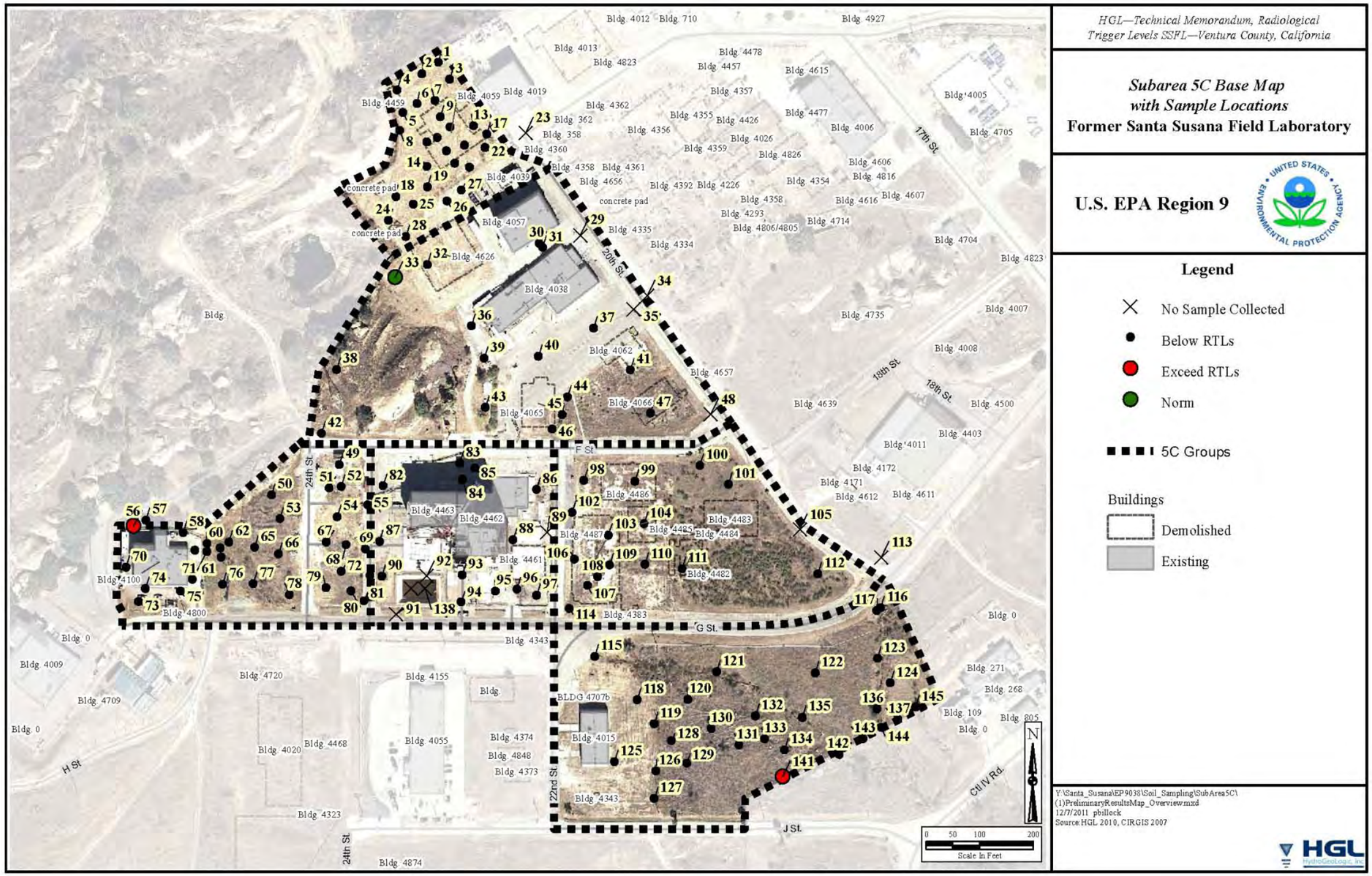

Figure 4
Preliminary 5C RTL Screening Result With Associated Data for Sample 10081, Location 56

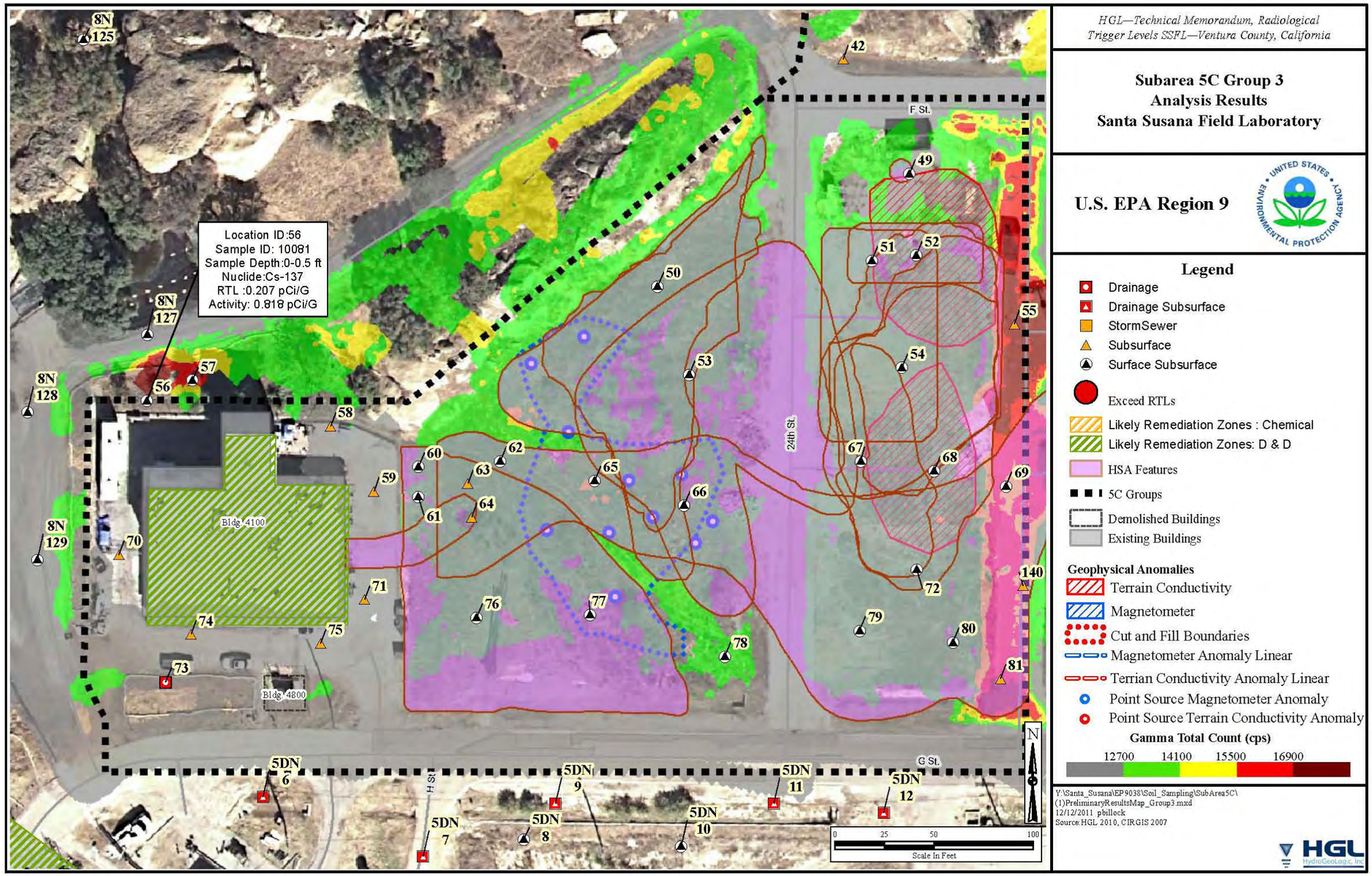

Figure 5
Preliminary 5C RTL Screening Result With Associated Data for Sample 10242, Location 141

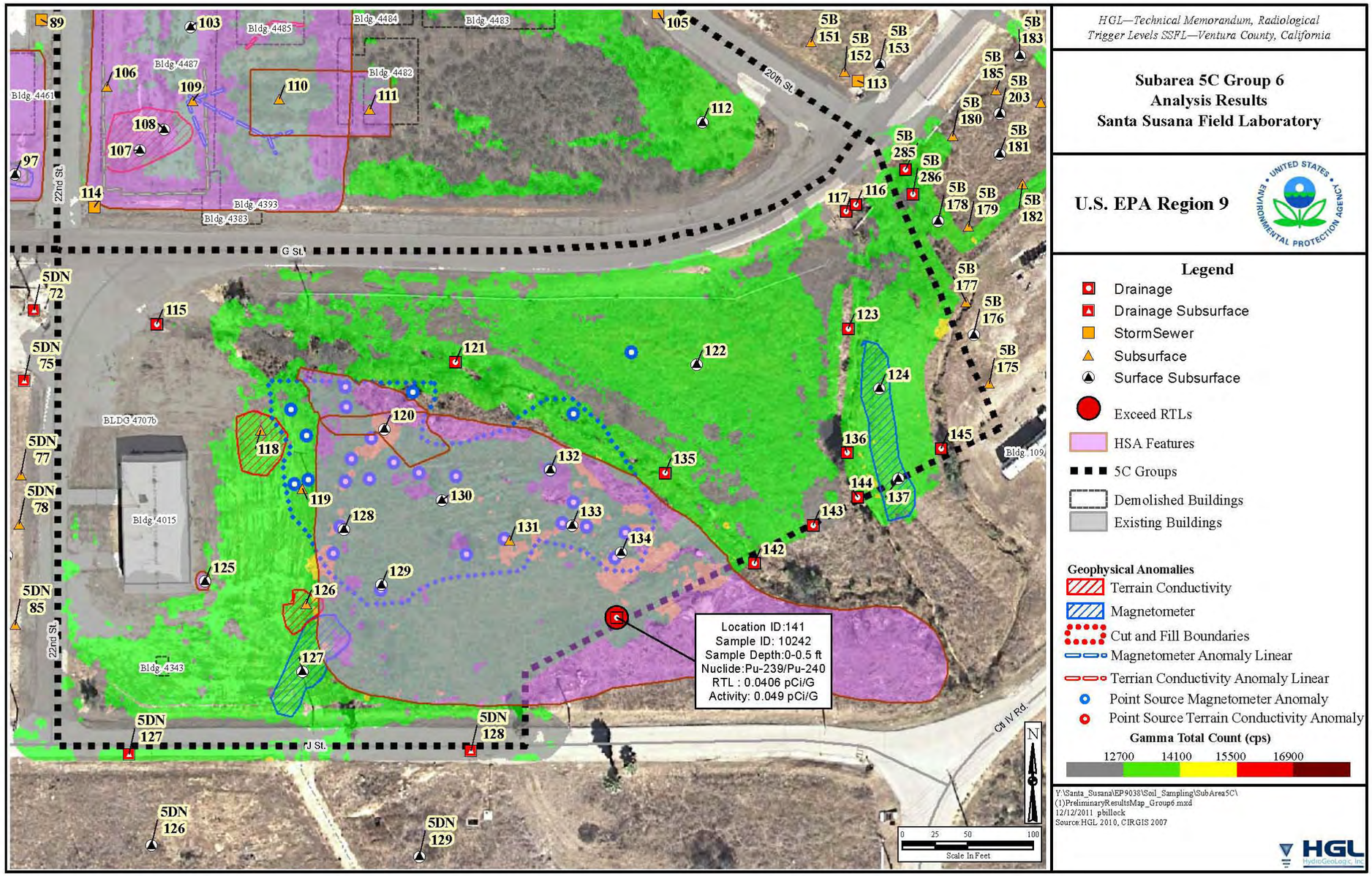

Figure 6
Preliminary 5C RTL Screening Result With Associated Data for Sample 10045, Location 33

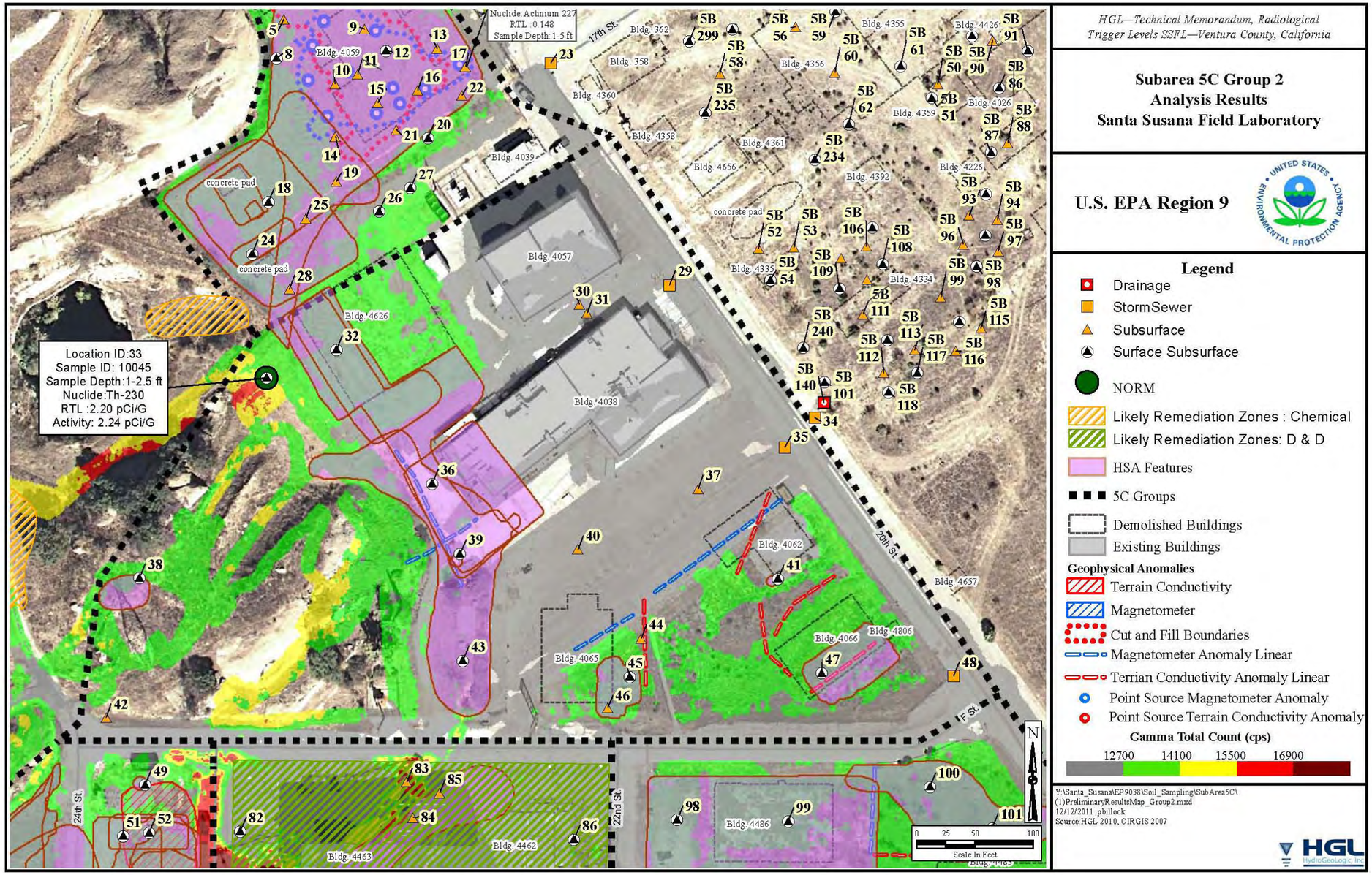

ATTACHMENT 3

DTSC Position Response to use of PRGs in Development of RTLs

Re: DTSC position requested Stewart Black

To: Rick Brausch, Stewart Black, Michael Montgomery 11/01/2011 05:00 PM

Cc: Mark Malinowski, John Jones, Mary Aycock, Andrew Bain, Jane Diamond, Loren Henning

From: Stewart Black <sblack@dtsc.ca.gov>

Mike,

Thank you for your note and request for DTSC's decision on the use of the radiological preliminary remediation goals in your development of "trigger levels" for EPA's use in its next round of sampling for the Radiological Survey work in Area IV of the Santa Susana Field Laboratory. As we understand it, the trigger levels you are developing are to aid in identifying where additional "step out" sampling will be required, and are necessary because the "lookup table" values have not yet been developed by DTSC as required under the Administrative Order on Consent that was negotiated between DTSC and USUSDOE.

While we understand the rationale you presented for using the radiological preliminary remediation goals as a trigger level for your phase 2 study, as we read and interpret the language of the AOC, there is no provision for using risk based factors in the development our lookup tables. As we discussed with your staff in September, and discussed in a recent meeting with the community, there are a number of factors that DTSC will be considering as we develop the lookup tables in which adjustments to the numbers presented in EPA's background study report. Because the AOC is explicit in the cleanup goal for the site, risk based values such as PRGs or Risk Based Screening Values would not be consistent with the specific terms of the AOC. While their use as "trigger levels" at this point in the investigative process would not be prevented, to use PRGs in the way EPA proposed could create a significant inconsistency between the levels being measured in this round of sampling and the values to be included in the Lookup Tables, an inconsistency that could require additional sampling in the future to reconcile.

Because the Lookup Tables for both radiological and chemical constituents have not yet been developed, we recognize that EPA must use some methodology to develop "trigger" or action levels to guide its sampling strategy, to define where additional sampling must be conducted. Ideally the Lookup Tables would provide the specific criteria to guide that decision. In their absence, DTSC would suggest that EPA only use background threshold values (BTVs) and minimum detectable concentrations (MDCs) to determine the need for step out samples. As you suggested, as additional data becomes available, and as the development of the radiological lookup table progresses, we may be in a position to revisit this discussion for later phases of EPA's sampling activities.

Let me know if you have any questions.
Thanks -SB

Stewart W. Black, P.G. Acting Deputy Director Department of Toxic Substances Control Brownfields and Environmental Restoration Program P.O.Box 806, 11-44 Sacramento, CA 95812-0806 (916) 324-3148
>>> <Montgomery.Michael@epamail.epa.gov> 10/20/2011 4:11 PM >>>

TO: Stewart Black and Rick Brausch, DTSC

FROM: Michael Montgomery,
Assistant Director, Superfund Federal Facilities Branch, EPA Region 9

RE: Santa Susana Field Laboratory Site EPA's Proposed Soil Radiological Trigger Level Criteria

We are approaching a critical decision point in our characterization efforts and need DTSC's input at or before the end of October. As you know, we are preparing to conduct Round Two step out samples. For the most significant radionuclides of concern (ROCs) EPA is proposing the use of background threshold values (BTVs) and minimum detectable concentrations (MDCs) to determine the need for step out samples. Based on the Radiological Background Study findings, EPA has identified 14 ROCs out of 55, roughly 25%, which are not risk drivers and which present significant characterization challenges to differentiate from Naturally Occurring Radioactive Materials (NORM). For these 14 ROCs, EPA proposes to use the radiological preliminary remediation goals (strictly 10^{-6} Agricultural), as criterion for the need for step out samples. We had discussed this approach with your staff and the community and received positive feedback.

EPA believes the use of the Ag PRGs for this subset of ROCs is a technically justifiable, effective and protective approach which greatly reduces the risk of conducting additional sampling based on NORM results. However, if DTSC prefers that EPA should not use this approach and instead exclusively utilize the BTVs and MDCs as screening criteria, please advise us by October 31 in order for us to complete development of our RTL Technical Memorandum. If DTSC prefers the BTV/MDC approach we may have to revisit it as additional data is delivered.

Thanks for your attention to this. Mike